831

Photo shows 831 TableTop® Chain molded in Low Friction (LF) material.

Chain Drawing

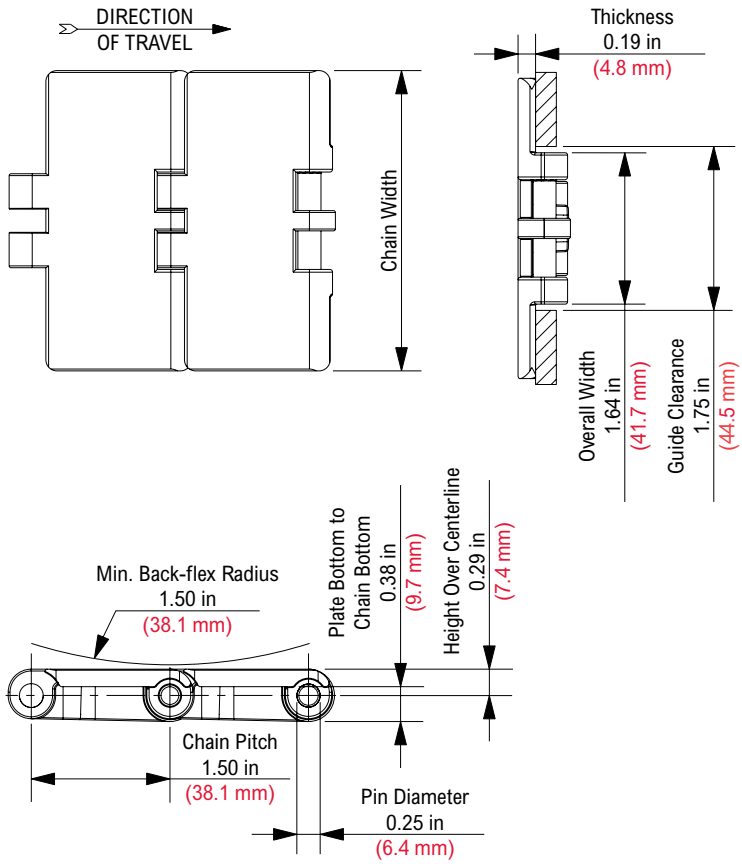

Chain Information

Chain Width			Min. Side-flex Radius		Approximate Weight	
desc	in	mm	in	mm	lbs/ft	kg/m
3 1/4	3.25	82.6	-	-	0.61	0.91
4 1/2	4.50	114.3	-	-	0.75	1.12
7 1/2	7.50	190.5	-	-	1.08	1.61

Available Materials

Prefix	Chain Material	Standard Pin Material	Temperature						Chain Strength		FDA Approval
			Fahrenheit			Celsius					
			min	max		min	max				
				dry	wet		dry	wet	lbs	N	
Standard Materials											
HP™	High Performance	Stainless Steel	-40	180	150	-40	82	66	365	1,624	Yes
LF	Low Friction	Stainless Steel	-40	180	150	-40	82	66	365	1,624	Yes
MLF	Medium Duty Low Friction	Stainless Steel	-40	180	150	-40	82	66	365	1,624	No
Made-to-Order Materials											
AS	Anti-Static	Stainless Steel	0	180	NR	-18	82	NR	219	974	No
BWR	Black Wear Resistant	Stainless Steel	-40	180	NR	-40	82	NR	438	1,948	No
CR	Extreme Chemical Resistant	Stainless Steel	40	240	212	4	116	100	292	1,299	Yes
D	Plain Acetal	Stainless Steel	-40	180	150	-40	82	66	365	1,624	No
FR	Flame Retardant	Stainless Steel	0	180	140	-18	82	60	219	974	No
MR	Melt Resistant	Stainless Steel	-80	220	NR	-62	104	NR	365	1,624	No
P	Chemical Resistant	Stainless Steel	0	180	140	-18	82	60	292	1,299	Yes
PS®	Platinum Series®	Stainless Steel	-40	180	150	-40	82	66	365	1,624	Yes
WHP	White High Performance	Stainless Steel	-40	180	150	-40	82	66	365	1,624	Yes
WX	Green Abrasion Resistant Polyamide	Stainless Steel	-40	220	NR	-40	104	NR	365	1,624	No

Regulatory Information

The Food and Drug Administration (FDA) accepts certain materials for direct food contact. FDA approved material is compliant to FDA 21 CFR § 177.

Rexnord, Platinum Series, HP and PS are trademarks of Rexnord Industries, LLC.
All rights reserved.

Additional Notes

Stocked in 80 pitch, 10 ft (3.048 m) length strands.

Thermoplastic pins are available on a made-to-order basis.

Chain strength is listed at room temperature. NR = Not Recommended.

For additional material information, see material portfolio.

SHD LBP

Photo shows MCC® SHD LBP TableTop® Chain molded in Internally Lubricated Polyacetal (XLA) material.

Chain Drawing

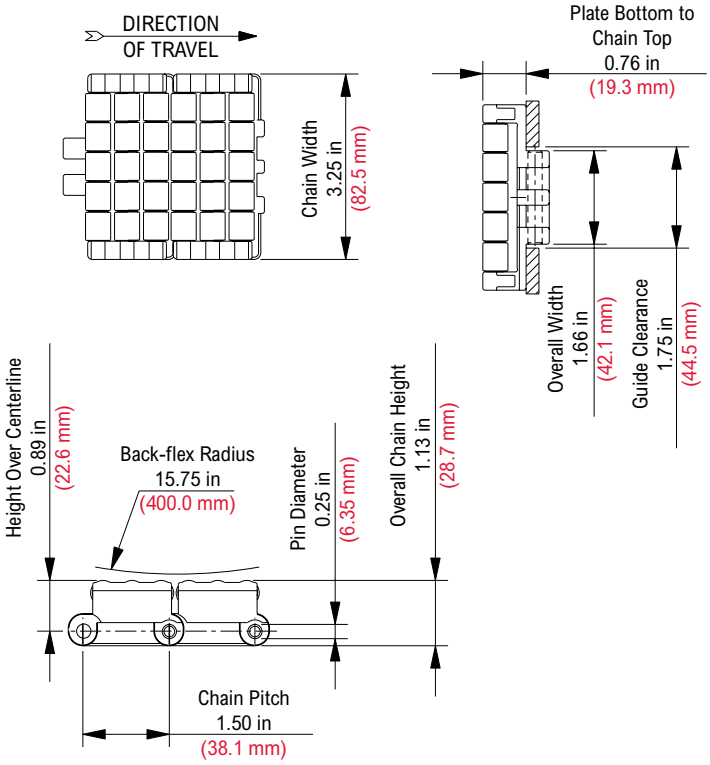

Chain Information

Chain Width			Min. Side-flex Radius		Approximate Weight	
desc	in	mm	in	mm	lbs/ft	kg/m
3 1/4	3.25	82.6	-	-	1.48	2.21

Available Materials

Prefix	Chain Material	Standard Pin Material	Temperature						Chain Strength		FDA Approval
			Fahrenheit			Celsius					
			min	max		min	max				
				dry	wet		dry	wet	lbs	N	
Standard Materials											
XLA	Internally Lubricated Polyacetal	Stainless Steel	-40	180	150	-40	82	66	365	1,624	Yes

Regulatory Information

The Food and Drug Administration (FDA) accepts certain materials for direct food contact. FDA approved material is compliant to FDA 21 CFR § 177.

Rexnord, MCC, and TableTop are trademarks of Rexnord Industries, LLC. All rights reserved.

Additional Notes

Stocked in 40 pitch, 5 ft (1.524 m) length strands.

Thermoplastic pins are available on a made-to-order basis.

Chain strength is listed at room temperature. NR = Not Recommended.

For additional material information, see material portfolio.

820 Semi-Steel Arm Body Sprocket

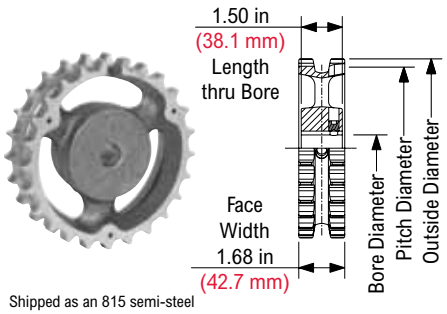

Shipped as an 815 semi-steel grooved army body sprocket

820 Semi-Steel Block Body Sprocket

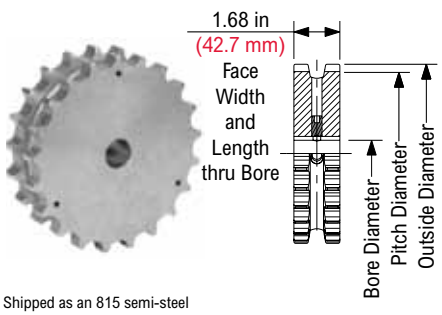

Shipped as an 815 semi-steel grooved block body sprocket

NS820 Thermoplastic Split Sprocket

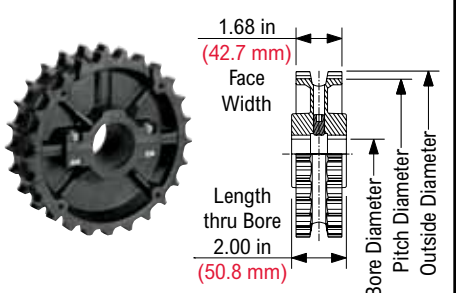

820 Semi-Steel Arm Body Sprocket Information

Number Of Teeth		Pitch Diameter		Outside Diameter		Bore Diameter (Shaft-Ready)								Bore Diameter (Round)				Approximate Weight	
						Round				Square									
		in		mm		in		mm		in		mm		in		mm			
actual	effect	in	mm	in	mm	min	max	min	max	min	max	min	max	min	max	min	max	lbs	kg
19	9 1/2	4.622	117.40	4.61	117.1	1	1 1/4	20	30	-	-	-	-	1	1 1/4	20	30	3.28	1.49
20	10	4.854	123.29	4.86	123.4	1	1 1/4	20	30	-	-	-	-	1	1 1/4	20	30	3.81	1.73
21	10 1/2	5.089	129.26	5.12	130.0	1	1 3/4	20	45	-	-	-	-	1	1 3/4	20	45	4.63	2.10
22	11	5.324	135.23	5.35	135.9	1	1 3/4	20	45	-	-	-	-	1	1 3/4	20	45	5.12	2.32
23	11 1/2	5.560	141.22	5.59	142.0	1	1 3/4	20	45	-	-	-	-	1	1 3/4	20	45	5.31	2.41
24	12	5.796	147.22	5.83	148.1	1	1 3/4	20	45	-	-	-	-	1	1 3/4	20	45	5.41	2.45
25	12 1/2	6.032	153.21	6.07	154.2	1	1 3/4	20	45	-	-	-	-	1	1 3/4	20	45	5.57	2.53
27	13 1/2	4.622	117.40	6.56	166.6	1	1 3/4	20	45	-	-	-	-	1	1 3/4	20	45	6.50	2.95
29	14 1/2	6.978	177.24	7.05	179.1	1	1 3/4	20	45	-	-	-	-	1	1 3/4	20	45	6.72	3.05
31	15 1/2	7.452	189.28	7.53	191.3	1	1 3/4	20	45	-	-	-	-	1	1 3/4	20	45	6.86	3.11
41	20 1/2	9.826	249.58	9.93	252.2	1	2 1/2	20	65	-	-	-	-	1	2 1/2	20	65	16.23	7.36

Shaft-ready round bore sprockets are shipped with keyway and setscrew.

820 Semi-Steel Block Body Sprocket Information

Number Of Teeth		Pitch Diameter		Outside Diameter		Bore Diameter (Shaft-Ready)								Bore Diameter (Round)				Approximate Weight	
						Round				Square									
		in		mm		in		mm		in		mm		in		mm			
actual	effect	in	mm	in	mm	min	max	min	max	min	max	min	max	min	max	min	max	lbs	kg
13	6 1/2	3.228	81.99	3.11	79.0	1	1 1/4	20	30	-	-	-	-	1	1 1/4	20	30	2.45	1.11
15	7 1/2	3.688	93.68	3.63	92.2	1	1 1/4	20	30	-	-	-	-	1	1 1/4	20	30	3.57	1.62
17	8 1/2	4.152	105.46	4.12	104.6	1	1 11/16	20	40	-	-	-	-	1	1 11/16	20	40	4.83	2.19
21	10 1/2	5.089	129.26	5.12	130.0	1	2 11/16	20	70	-	-	-	-	1	2 11/16	20	70	4.63	2.10
25	12 1/2	6.032	153.21	6.07	154.2	1	3 7/16	20	90	-	-	-	-	1	3 7/16	20	90	5.57	2.53

Shaft-ready round bore sprockets are shipped with keyway and setscrew.

NS820 Thermoplastic Split Sprocket Information

Number Of Teeth		Pitch Diameter		Outside Diameter		Bore Diameter (Shaft-Ready)								Bore Diameter (Idler)				Approximate Weight	
						Round				Square									
		in		mm		in		mm		in		mm		in		mm			
actual	effect	in	mm	in	mm	min	max	min	max	min	max	min	max	min	max	min	max	lbs	kg
21	10 1/2	5.089	129.26	5.12	130.0	1	1 5/8	25	40	-	-	-	-	1	1 5/8	25	40	1.01	0.46
23	11 1/2	5.560	141.22	5.59	142.0	1	1 5/8	25	40	-	-	-	-	1	1 5/8	25	40	1.19	0.54
25	12 1/2	6.032	153.21	6.07	154.2	1	2	25	50	-	-	-	-	1	2	25	50	1.39	0.63
27	13 1/2	6.504	165.20	6.56	166.6	1	1 5/8	25	40	-	-	-	-	1	1 5/8	25	40	1.76	0.80

Imperial shaft-ready round bore sprockets are shipped with keyway and setscrew. Metric shaft-ready round bore sprockets are shipped with keyway and no setscrew. Idler bores are designed to spin freely on the shaft.

815/820 Idler Wheel

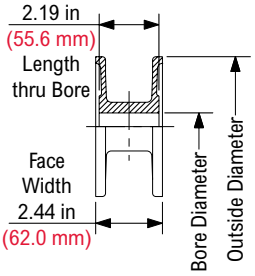

815/820 Idler Wheel Imperial Information

Equivalent Tooth Size	Outside Diameter		Imperial Bore Diameter (Idler)					Approximate Weight	
	in	mm	in					lbs	kg
21	5.11	129.8	7/8	1	1 3/16	1 1/4	1 1/2	0.49	0.22
23	5.60	142.2	7/8	1	1 3/16	1 1/4	1 1/2	0.59	0.27
25	6.09	154.7	7/8	1	1 3/16	1 1/4	1 1/2	0.66	0.30
27	6.56	166.6	-	-	-	1 1/4	-	0.70	0.32

Idler wheels are designed to spin freely on the shaft. 27 tooth idler wheel is available on a made-to-order basis and is subject to minimum order requirements.

815/820 Idler Wheel Metric Information

Equivalent Tooth Size	Outside Diameter		Metric Bore Diameter (Idler)				Approximate Weight	
	in	mm	mm				lbs	kg
21	5.11	129.8	25	30	35	40	0.49	0.22
23	5.60	142.2	25	30	35	40	0.59	0.27
25	6.09	154.7	25	30	35	40	0.66	0.30

Idler wheels are designed to spin freely on the shaft.