RBC PROPRIETARY AND CONFIDENTIAL INFORMATION
This document is the property of REGAL BELOIT CORPORATION ("RBC") including its subsidiaries and divisions and contains proprietary information of RBC. This document is loaned on the express condition that neither it nor the information contained therein shall be disclosed to others without the express written consent of RBC, and that the information shall be used by the recipient only as approved expressly by RBC. This document shall be returned to RBC upon its request. This document may be subject to certain restrictions under U.S. export control laws and regulations.

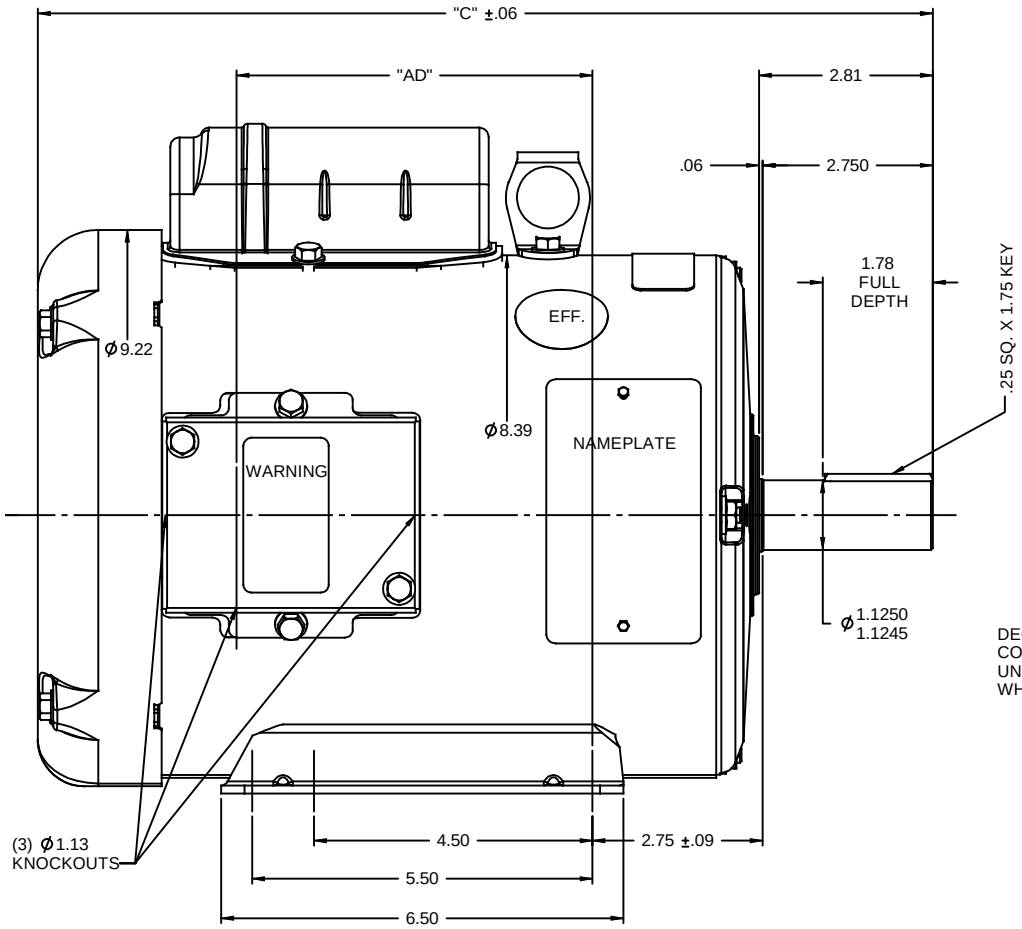

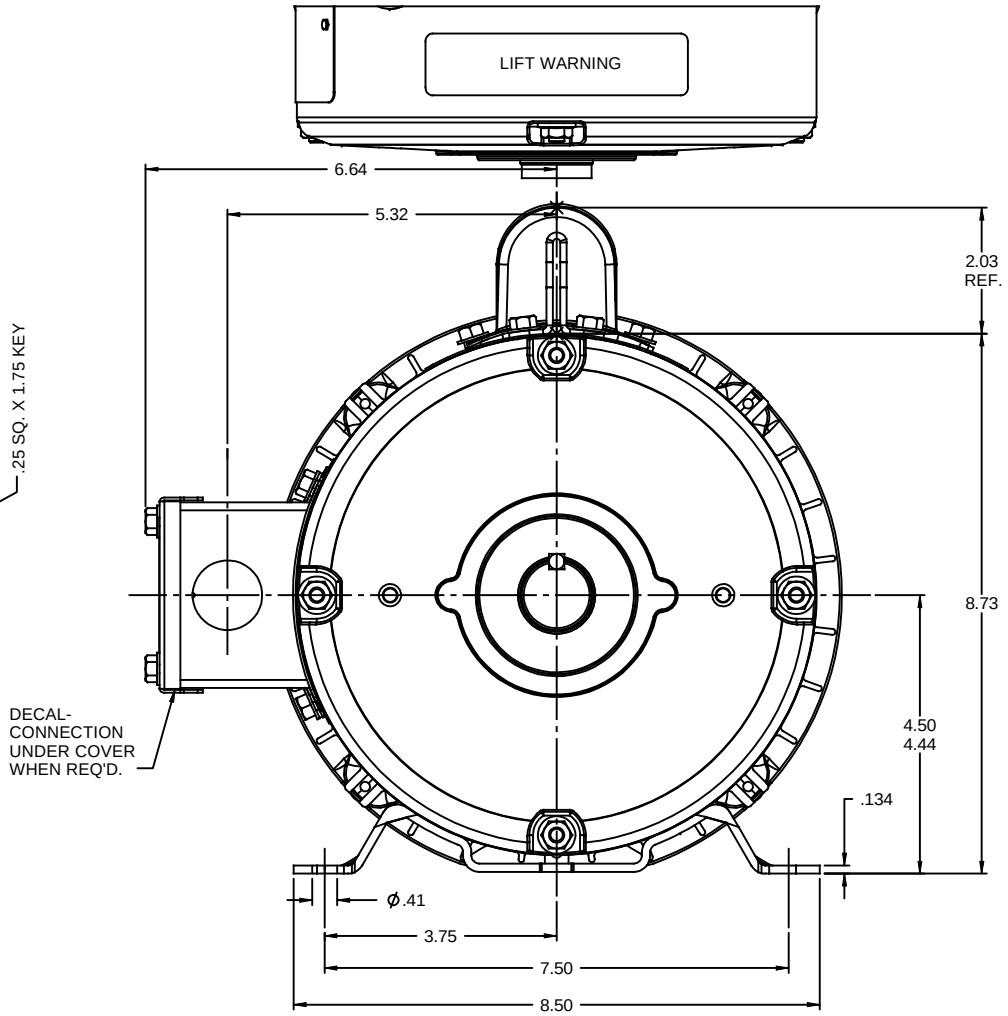

GASKETS THROUGHOUT

DASH NO.	"C"	"AD"
800	13.46	4.75
850	13.96	5.25
900	14.46	5.75
950	14.96	6.25
1000	15.46	6.75
1050	15.96	7.25
1100	16.46	7.75
1150	16.96	8.25

NO	REVISION	BY & DATE	CHK
-	UPDATED & REDRAWN IN SOLIDWORKS	LST 12/15/2009	XX

TOLERANCES UNLESS SPECIFIED

DEC	INCHES
.X	±.1
.XX	±.03
.XXX	±.005
.XXXX	±.0005
ANG	±1/2°

REGAL-BELOIT CORPORATION

TITLE OUTLINE - 180T FRAME
TEFC - RIGID MOUNT

MAT'L
FINISH

DRAWN PG 6/15/97
CHK RK 6/15/97
APPR
SCALE 1:2
REF 035002
FMF
PAGE OF

THIRD ANGLE PROJECTION

RFP
PREV
NETWORK FILE NAME

SIZE B
DRAWING NO 035347
REV -

12/15/2009 3:45:30 PM