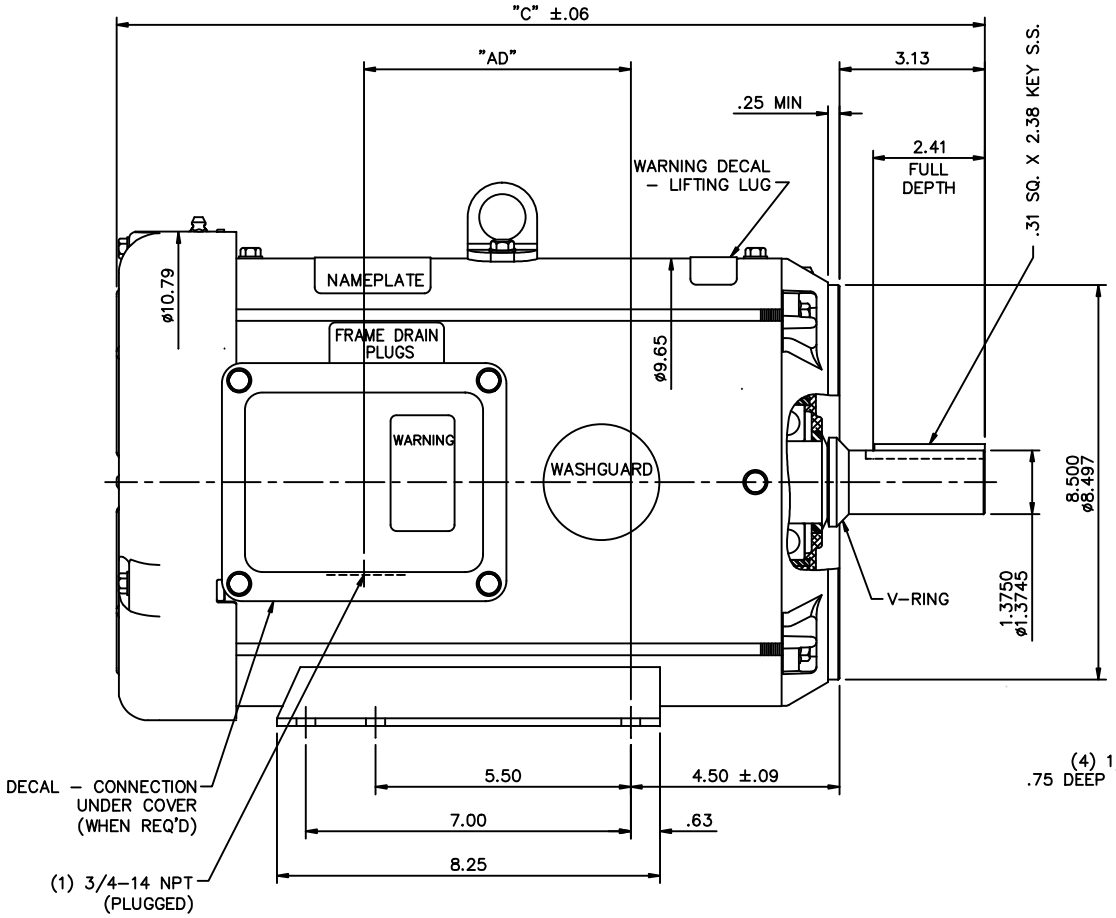

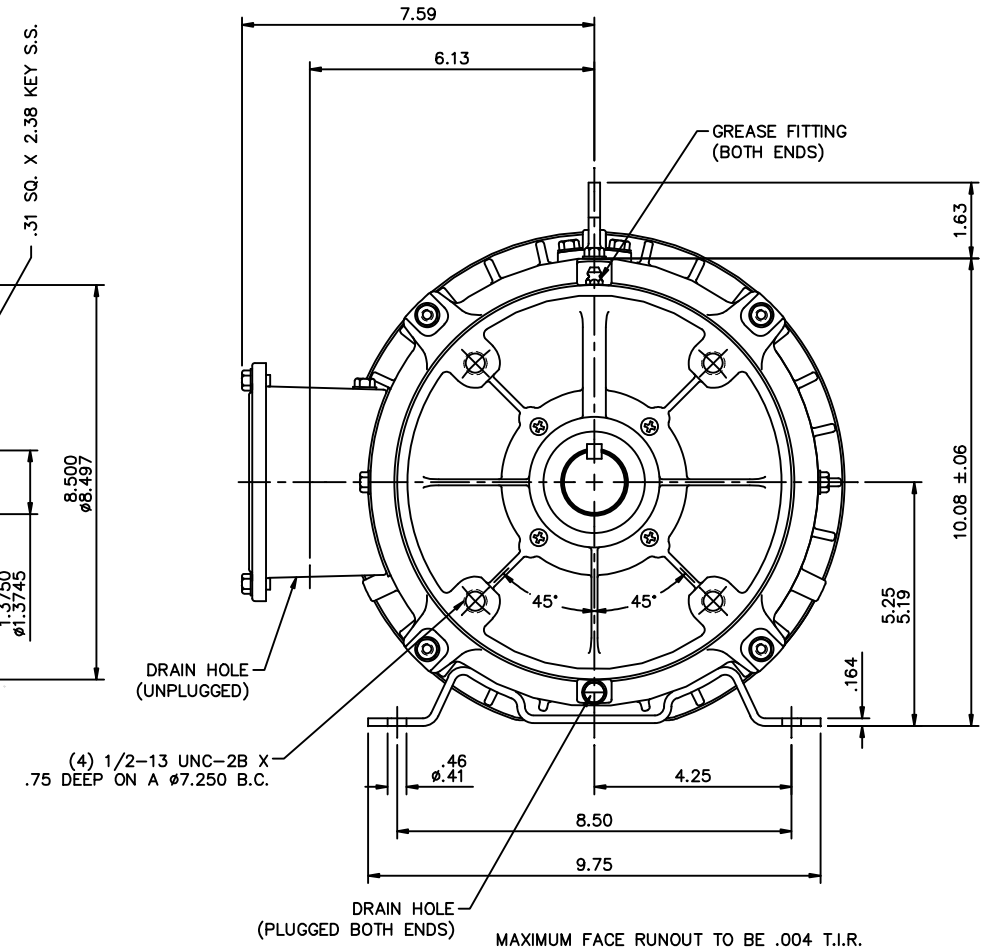

MAXIMUM FACE RUNOUT TO BE .004 T.I.R.
MAXIMUM PILOT ECCENTRICITY TO BE .004 T.I.R.
PERMISSIBLE SHAFT RUNOUT TO BE .002 T.I.R.
ALIGN BASE TO C–FACE MOUNTING HOLES WITHIN ±1/16"

SPECIAL FEATURES:

BUNA–N GASKETS THROUGHOUT
SHAFT SEALS – BOTH ENDS OF MOTOR
V–RING AT SHAFT END OF MOTOR
STAINLESS STEEL SHAFT, NAMEPLATE & HARDWARE

DASH NO.	"C"	"AD"
1100	17.71	4.75
1150	18.21	5.25
1200	18.71	5.75
1250	19.21	6.25
1300	19.71	6.75
1350	20.21	7.25

NO.	REVISION	BY & DATE	CHK
02	UPDATED PER ISAAC 10–0580	LST 5/11/10	
01	ADDED: WARNING DECAL – LIFTING LUG & WARNING DECAL – WITH/OUT PROTECTOR; REMOVED: DECAL – WIRING INSTRUCTION	KVN 4/6/2010	
	NAMEPLATE – was– TV SCREEN STYLE (080884.01)		

TOLERANCES UNLESS SPECIFIED

DEC.	INCHES
.X	±.1
.XX	±.03
.XXX	±.005
.XXXX	±.0005
ANG	±1/2°

LEESON — ELECTRIC MOTORS GEARMOTORS AND DRIVES

TITLE: OUTLINE – 210TC FRAME TEFC – RIGID "C"

MAT'L.: WASHGUARD

FINISH

CAD FILE: 037608

RFP 2/19/03

DIST

DRAWN	RDW 2/19/03
CHK	
APPD	SW 2/19/03
SCALE	3=8
REF	
FMF	
PREV	

SIZE: B — DRAWING NO.: 037608 — REV.: 02

THIS DRAWING IN DESIGN AND DETAIL IS OUR PROPERTY AND MUST NOT BE USED EXCEPT IN CONNECTION WITH OUR WORK ALL RIGHTS OF DESIGN AND INVENTION ARE RESERVED
THIS IS AN ELECTRONICALLY GENERATED DOCUMENT – DO NOT SCALE THIS PRINT