KD2® Spacer Coupling

The KD2® coupling is designed for medium duty applications requiring moderate shaft separations, and was specifically engineered to meet API 610 specifications for industrial pump couplings. Consisting of three main parts, two hubs and a factory assembled flexible center section which installs or drops out as one unit, the KD2 greatly simplifies installation or maintenance.

The flexible center section is piloted to insure excellent dynamic balance. AGMA Class 9 is standard, as-manufactured. Dynamic balance to AGMA Class 10 or Class 11 are available options. An anti-flail safety feature is also included in the flexible center section assembly.

For higher power requirements, consider a KD20 disc coupling. For economy duty, consider a KD21 disc coupling. If a flexible hub design is needed, consider a KD22 disc coupling.

KD2® couplings use MT Disc Packs.

NEW

Size 023

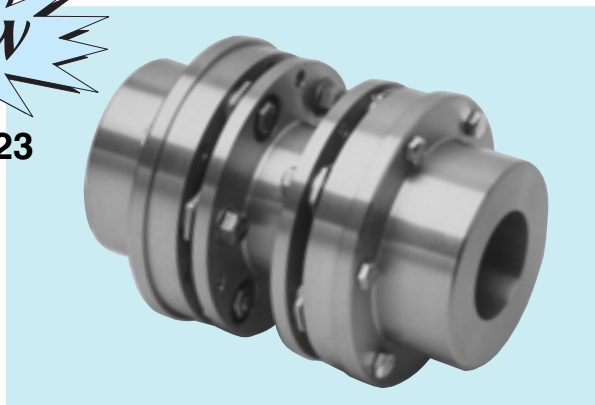

- **Medium Duty**
- **Standard Shaft Separations for Industrial Pumps**
- **Factory Assembled Flexible Center Sections**
- **Designed Specifically for API 610**
- **High Flexible, Unitized Disc Packs**

KD2® Rough Bore Part Numbers

Coupling Size	Between Shaft Ends	Complete Coupling w/2 Std. Hubs Rough Bore	Complete Coupling w/1 Std. & 1 Long Hub Rough Bore	Complete Coupling w/2 Long Hubs Rough Bore	Complete Coupling w/1 Jumbo Hub & 1 Std. Hub	Complete Coupling w/2 Jumbo hubs	Complete Coupling w/1 Long & 1 Jumbo Hub	Center Assembly
023	3 1/2	023 KD 2 SS350	023 KD 2 LS350	023 KD 2 LL350	023 KD 2 JS350	023 KD 2 JJ350	023 KD 2 JL350	023 KD 2 CA350
	5	023 KD 2 SS500	023 KD 2 LS500	023 KD 2 LL500	023 KD 2 JS500	023 KD 2 JJ500	023 KD 2 JL500	023 KD 2 CA500
	7	023 KD 2 SS700	023 KD 2 LS700	023 KD 2 LL700	023 KD 2 JS700	023 KD 2 JJ700	023 KD 2 JL700	023 KD 2 CA700
103	3 1/2	103 KD 2 SS350	103 KD 2 LS350	103 KD 2 LL350	103 KD 2 JS350	103 KD 2 JJ350	103 KD 2 JL350	103 KD 2 CA350
	4 3/8	103 KD 2 SS438	103 KD 2 LS438	103 KD 2 LL438	103 KD 2 JS438	103 KD 2 JJ438	103 KD 2 JL438	103 KD 2 CA438
	5	103 KD 2 SS500	103 KD 2 LS500	103 KD 2 LL500	103 KD 2 JS500	103 KD 2 JJ500	103 KD 2 JL500	103 KD 2 CA500
	7	103 KD 2 SS700	103 KD 2 LS700	103 KD 2 LL700	103 KD 2 JS700	103 KD 2 JJ700	103 KD 2 JL700	103 KD 2 CA700
153	4 3/8	153 KD 2 SS438	153 KD 2 LS438	153 KD 2 LL438	153 KD 2 JS438	153 KD 2 JJ438	153 KD 2 JL438	153 KD 2 CA438
	5	153 KD 2 SS500	153 KD 2 LS500	153 KD 2 LL500	153 KD 2 JS500	153 KD 2 JJ500	153 KD 2 JL500	153 KD 2 CA500
	7	153 KD 2 SS700	153 KD 2 LS700	153 KD 2 LL700	153 KD 2 JS700	153 KD 2 JJ700	153 KD 2 JL700	153 KD 2 CA700
203	5	203 KD 2 SS500	203 KD 2 LS500	203 KD 2 LL500	203 KD 2 JS500	203 KD 2 JJ500	203 KD 2 JL500	203 KD 2 CA500
	7	203 KD 2 SS700	203 KD 2 LS700	203 KD 2 LL700	203 KD 2 JS700	203 KD 2 JJ700	203 KD 2 JL700	203 KD 2 CA700
253	7	253 KD 2 SS700	253 KD 2 LS700	253 KD 2 LL700	253 KD 2 JS700	253 KD 2 JJ700	253 KD 2 JL700	253 KD 2 CA700
	8	253 KD 2 SS800	253 KD 2 LS800	253 KD 2 LL800	253 KD 2 JS800	253 KD 2 JJ800	253 KD 2 JL800	253 KD 2 CA800
303	7	303 KD 2 SS700	303 KD 2 LS700	303 KD 2 LL700	303 KD 2 JS700	303 KD 2 JJ700	303 KD 2 JL700	303 KD 2 CA700
	8	303 KD 2 SS800	303 KD 2 LS800	303 KD 2 LL800	303 KD 2 JS800	303 KD 2 JJ800	303 KD 2 JL800	303 KD 2 CA800
353	8	353 KD 2 SS800	353 KD 2 LS800	353 KD 2 LL800	353 KD 2 JS800	353 KD 2 JJ800	353 KD 2 JL800	353 KD 2 CA800
	9	353 KD 2 SS900	353 KD 2 LS900	353 KD 2 LL900	353 KD 2 JS900	353 KD 2 JJ900	353 KD 2 JL900	353 KD 2 CA900
403	9	403 KD 2 SS900	403 KD 2 LS900	403 KD 2 LL900	403 KD 2 JS900	403 KD 2 JJ900	403 KD 2 JL900	403 KD 2 CA900
453	9	453 KD 2 SS900	453 KD 2 LS900	453 KD 2 LL900	453 KD 2 JS900	453 KD 2 JJ900	453 KD 2 JL900	453 KD 2 CA900

① Note: For Finish Bore add FB to Part Number and specify bore.

① All finish bores and keyways per AGMA 9002-A86 commercial standard tolerances.

Component Parts

Description	Part Number
Standard Hub	SHUB
Long Hub	LHUB
Jumbo Hub	JHUB
*Center Assembly for x.xx Shaft Separation	CAXXX
**MT Disc Pack	MTDP
**MT Disc Pack Fastener Set	MTFS
**Flange Fastener Set	FFSMT
**Jumbo Hub Fastener Set	JFSHT

* Center Assembly includes (2) disc packs, (2) disc pack fastener sets.

** For Disc Packs and Fastener Sets, do not include "Series" number in the part number.

How to Order Components

103 KD 2 SHUB

- SHUB — component
- 2 — series
- KD — model
- 103 — size

How to Order Disc Packs and Fastener Sets

103 KD MTDP

- MTDP — component
- KD — model
- 103 — size

Selection Data

Size	Maximum Bores (in)		Coupling Rating (HP/100 RPM)	Torque Rating		② Maximum Speed (RPM)	Total① Weight (lbs)	Total① WR² (lb-in²)	Spacer Tube Weight per inch		Axial Capacity (in)
	Std. & Long Hub	Jumbo Hub		Continuous (in-lb)	Peak (in-lb)				Weight (lbs)	WR² (lb-in²)	
023	1.50	2.00	2.3	1450	2900	25500	5.5	10.5	0.17	0.10	±.040
103	1.88	2.75	4.3	2710	5420	17000	9.9	22.0	0.44	0.45	±.060
153	2.88	4.00	12.5	7880	15760	14200	23.2	93.1	0.54	1.06	±.075
203	3.25	4.62	22.9	14400	28800	12800	35.5	205	0.56	1.67	±.090
253	4.00	5.62	37.5	23600	47200	11500	58.8	475	0.73	3.59	±.105
303	4.75	6.50	60.0	37800	75600	10000	89.6	989	1.14	7.52	±.125
353	5.50	7.62	100	63000	126000	8500	145	2160	1.57	12.70	±.150
403	6.25	8.75	155	97700	195000	7500	220	4290	1.84	19.80	±.175
453	7.25	9.38	205	129000	258000	7000	261	6180	2.01	27.00	±.200

① Data based on Min. "C" dimensions, maximum bores and standard hubs.
② See Balance Specifications page 23. Consult engineering for applications where speed exceed 75% of max. speed rating.

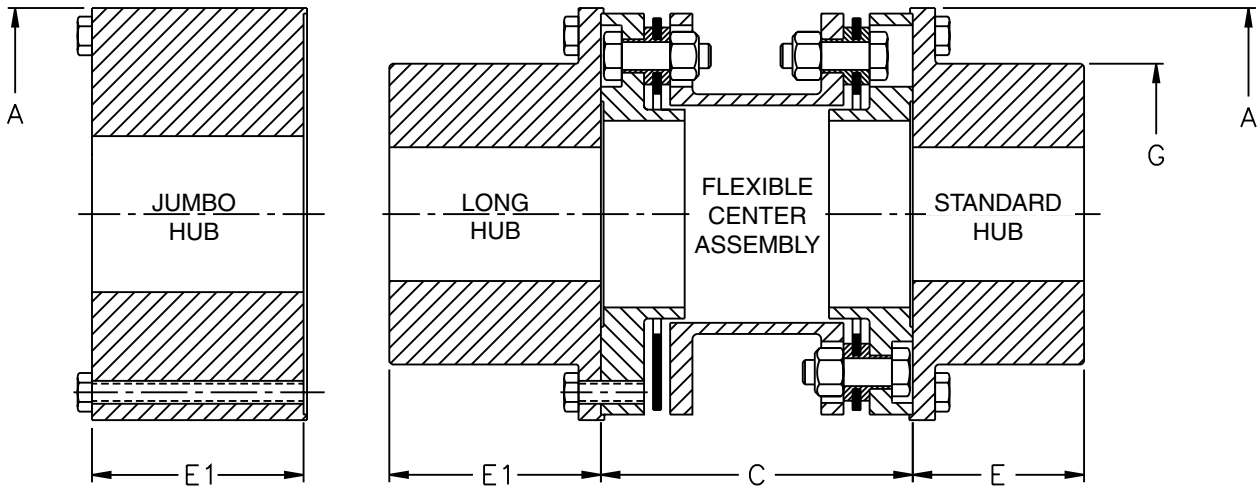

Note: "C" dimension = center assembly length.

Dimensional Data

Size	Rough Bore	A (in)	Max C' Bore (in)	C Min. (in)	E (in)	E1 (in)	G (in)	Stock "C' Dimension (in)					
								3 1/2	4 3/8	5	7	8	9
023	0.31	3.54	1.88	2.50	1.57	1.57	2.16	X		X	X		
103	0.50	4.31	2.38	3.50	1.50	2.50	2.62	X	X	X	X		
153	0.75	5.69	3.88	4.38	2.00	3.12	4.12		X	X	X		
203	1.00	6.75	4.50	4.81	2.25	3.62	4.75			X	X		
253	1.00	8.00	5.50	5.75	2.88	4.25	5.75				X	X	
303	1.50	9.25	6.44	6.50	3.38	4.75	6.75				X	X	
353	2.00	10.75	7.31	7.62	4.00	5.38	7.75					X	X
403	2.50	12.25	8.50	9.00	4.44	6.12	9.00						X
453	3.00	13.25	9.62	9.00	4.81	6.75	10.12						X

Note: Shaft separations longer than stock may be accomodated by using stock center assemblies and counterboring and overhanging long hubs to make up the difference. Shaft fit length should be equal to "E" or greater. Consult KOP-FLEX for more details.

Visit www.kopflex.com