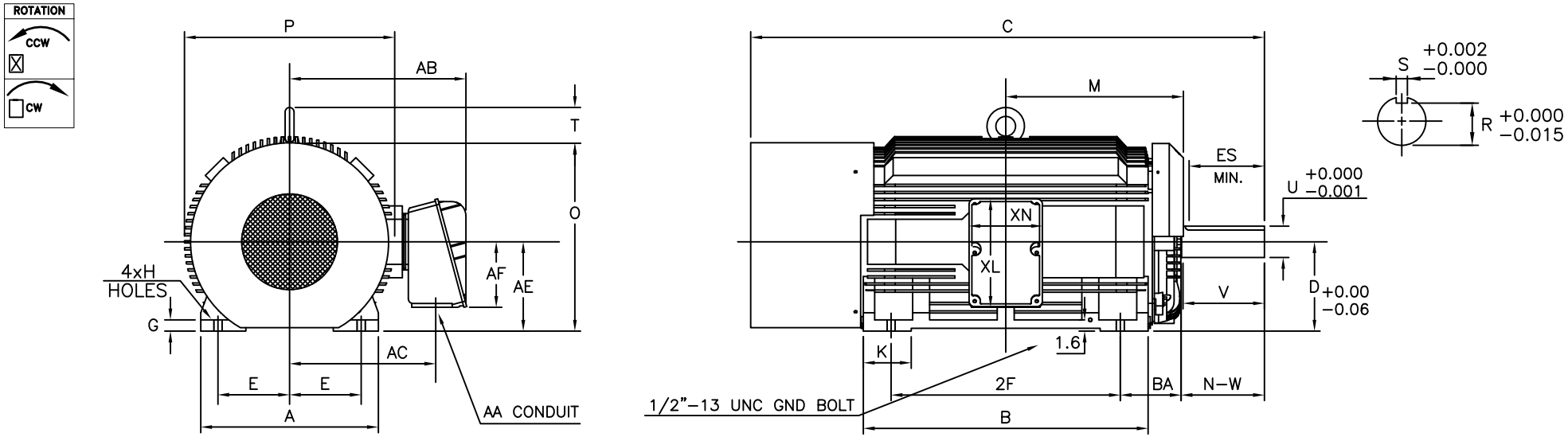

NOTES:
1. DIMENSION V REPRESENTS LENGTH OF STRAIGHT PART OF SHAFT
2. MAIN CONDUIT BOX MAY BE ROTATED IN 90° INCREMENTS
3. KEY DIMENSIONS EQUAL S x S x 10.00 FOR UZ, S x S x 5.00 FOR US, AND S x S x 3.00 FOR USS (MOTOR SUPPLIED WITH KEY)
4. MOTOR WEIGHT SHOWN IS MAXIMUM HORSEPOWER IN FRAME
5. STANDARD 4–8 POLE PRODUCT USES BI–DIRECTIONAL FAN. OPPOSITE ROTATION AVAILABLE ONLY BY CONNECTION CHANGE
6. STANDARD 2 POLE PRODUCT USES UNI–DIRECTIONAL FAN. OPPOSITE ROTATION AVAILABLE ONLY BY FAN AND CONNECTION CHANGE

UNITS: INCHES

FRAME SIZE	MOTOR DIMENSIONS											CONDUIT BOX						
	A	B	C	D	G	J	K	M	O	P	T	AA[NPT]	AB	AC	AE	AF	XL	XN
5010USS	24.8	39.8	64.9	12.50	2.6	6.3	6.7	24.8	26.2	29.5	5.1	4.00	24.8	20.4	12.5	9.2	15.2	10.2
5010US	24.8	39.8	66.3	12.50	2.6	6.3	6.7	24.8	26.2	29.5	5.1	4.00	24.8	20.4	12.5	9.2	15.2	10.2
5010UZ	24.8	39.8	71.7	12.50	2.6	6.3	6.7	24.8	26.2	29.5	5.1	4.00	24.8	20.4	12.5	9.2	15.2	10.2

FRAME SIZE	MOUNTING				SHAFT EXTENSION			KEY SEAT			BEARINGS		MAXIMUM WEIGHT
	E	2F	H	BA	N–W	V	U	R	S	ES	LS	OS	
5010USS	10.00	32.00	1.2	8.50	4.75	4.50	2.375	2.021	0.625	3.00	6313C3	NU313C3	4650 lbs.
5010US	10.00	32.00	1.2	8.50	6.25	6.19	3.625	3.134	0.875	5.00	6320C3	6320C3	
5010UZ	10.00	32.00	1.2	8.50	11.62	11.38	4.375	3.817	1.000	10.00	NU324C3	6320C3	

CUSTOMER: _____ MOTOR MODEL NO.: _____

P.O. NO.: _____ HP: _____ VOLTAGE: _____ RPM(SYN.): _____ Hz: _____

FRAME SIZE: _____ PRODUCT TYPE: TEFC EQP III 840 & 841

COMMENTS: _____

PER: _____ DATE: _____

TAG NO's.:

- [x] STANDARD (NO AUX. BOXES)
- [ ] RTD AUX. BOX
- [ ] SPACE HEATER AUX. BOX
- [ ] BEARING RTD's

TOSHIBA RESERVES THE RIGHT TO MAKE CHANGES OF TECHNICAL IMPROVEMENT AND THE DATA MAY CHANGE WITHOUT NOTICE [x] PRELIMINARY

DO NOT USE FOR CONSTRUCTION, INSTALLATION, OR APPLICATION PURPOSES UNLESS THE DRAWING IS MARKED AS CERTIFIED [ ] CERTIFIED

TOSHIBA

TOSHIBA INTERNATIONAL CORPORATION

TOTALLY–ENCLOSED FAN–COOLED
HORIZONTAL FOOT–MOUNTED
3 PHASE INDUCTION MOTOR
F1 ASSEMBLY

XT SERIES

VISIT OUR WEBSITE AT:
www.toshiba.com/ind

MDSL0031–22 R01

Issued Date	8/18/2016	Transmit #	
Issued By	dschoeck	Issued Rev	

TOSHIBA
Leading Innovation >>>

TYPICAL MOTOR PERFORMANCE DATA

Model: B3506FLG3OMHD

HP	kW	Pole	FL RPM	Frame	Voltage	Hz	Phase	FL Amps
350	261	6	1185	5010US	288/575	60	3	680/340
Enclosure	**IP**	**Ins. Class**	**S.F.**	**Duty**	**NEMA Nom. Eff.**	**NEMA Design**	**kVA Code**	**Ambient (°C)**
TEFC	54	F	1.15	CONT	95.8	B	G	40 C

Load	HP	kW	Amperes	Efficiency (%)	Power Factor (%)
Full Load	350	261.0	340.0	95.8	80.5
¾ Load	262.50	195.7	266.3	95.3	77.5
½ Load	175.00	130.5	200.1	93.8	69.8
¼ Load	87.50	65.2	148.2	89.2	49.6
No Load			114.0		2.9
Locked Rotor			1999.00		23.9

Torque				Rotor wk² Inertia
Full Load (lb-ft)	Locked Rotor (% FLT)	Pull Up (% FLT)	Break Down (% FLT)	(lb-ft²)
1549	155	100	245	221.35

Safe Stall Time(s)		Sound Pressure dB(A) @ 1M	Bearings*		Approx. Motor Weight (lbs)
Cold	Hot		DE	NDE	
34	12	-	6320C3	6320C3	

*Bearings are the only recommended spare part(s).

Motor Options:
Product Family:EQPIII 840
Mounting:Footed,Shaft:US Shaft

Customer	
Customer PO	
Sales Order	
Project #	

Tag:

All characteristics are average expected values.

TOSHIBA INTERNATIONAL CORPORATION · HOUSTON, TEXAS U.S.A.

Engineering	aacosta	Doc. Written By	D. Suarez	Doc.# / Rev	MPCF-1119 / 0
Engr. Date	4/25/2012	Doc. Approved By	M. Campbell	Doc. Issued	6/8/2011

Issued Date	8/18/2016	Transmit #	
Issued By	dschoeck	Issued Rev	

TOSHIBA
Leading Innovation >>>

SPEED TORQUE/CURRENT CURVE

Model: B3506FLG3OMHD

HP	kW	Pole	FL RPM	Frame	Voltage	Hz	Phase	FL Amps
350	261	6	1185	5010US	288/575	60	3	680/340
Enclosure	**IP**	**Ins. Class**	**S.F.**	**Duty**	**NEMA Nom. Eff.**	**NEMA Design**	**kVA Code**	**Ambient (°C)**
TEFC	54	F	1.15	CONT	95.8	B	G	40 C

Locked Rotor Amps	Rotor wk² Inertia (lb-ft²)	Torque			
		Full Load (lb-ft)	Locked Rotor (%)	Pull Up (%)	Break Down (%)
1999.00	221.35	1549	155	100	245

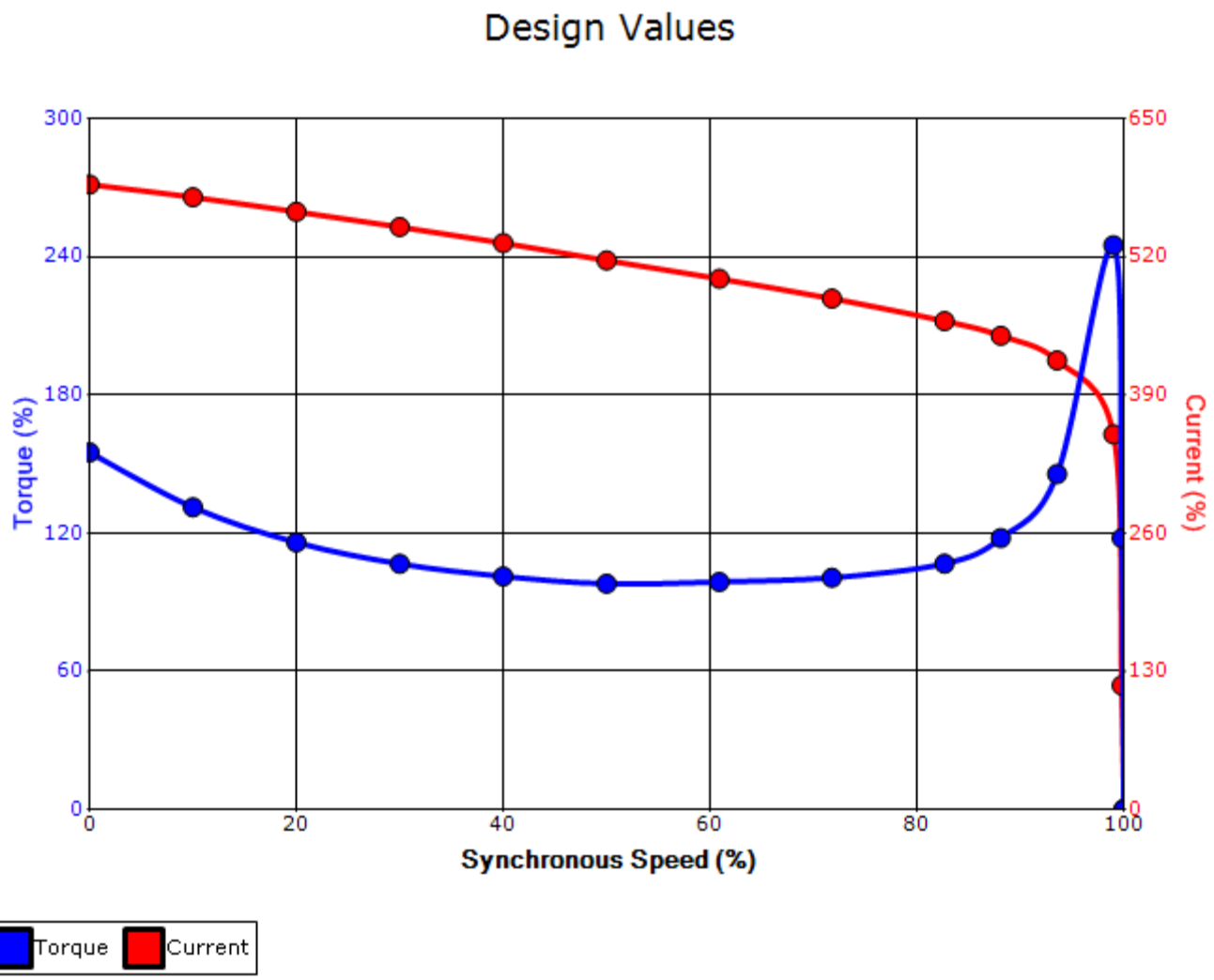

Customer			**wk² Load Inertia (lb-ft²)**	-
Customer PO			**Load Type**	-
Sales Order			**Voltage (%)**	100
Project #			**Accel. Time**	-

Tag:

All characteristics are average expected values.

TOSHIBA INTERNATIONAL CORPORATION · HOUSTON, TEXAS U.S.A.

Engineering	aacosta	**Doc. Written By**	D. Suarez	**Doc.# / Rev**	MPCF-1121 / 0
Engr. Date	4/25/2012	**Doc. Approved By**	M. Campbell	**Doc. Issued**	6/8/2011

Motor Connection Diagrams
6 Leads

Across the Line Starting / Run - Delta:

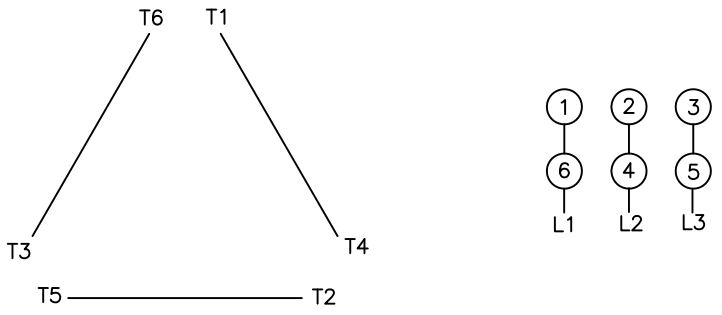

Alternate Starting Connection - Wye:

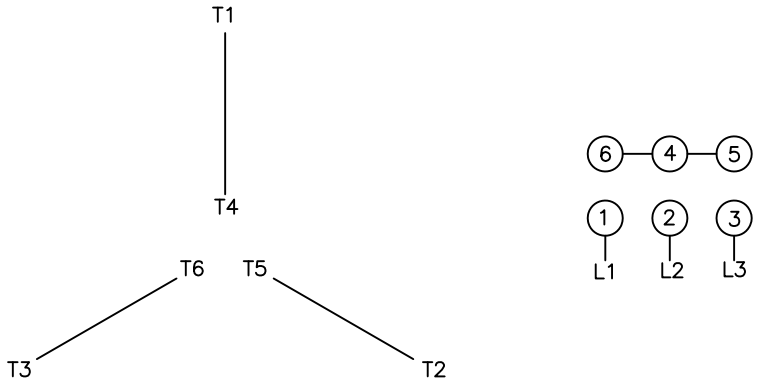

Switch L1 and L2 to reverse rotation