005465-01

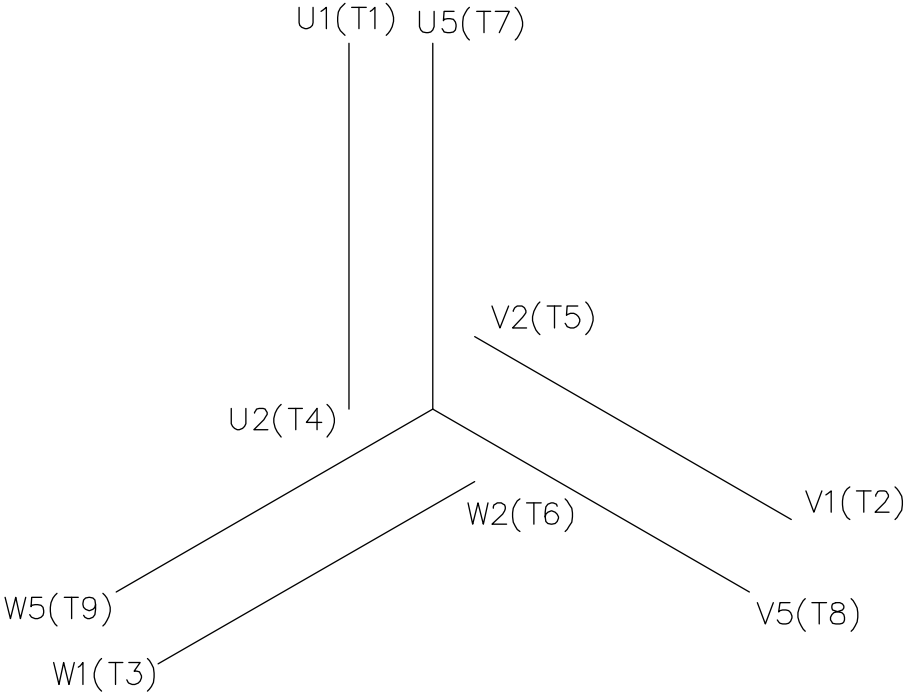

REF. DECAL (IEC) 080644
REF. DECAL (NEMA) 080446

IEC MARKINGS

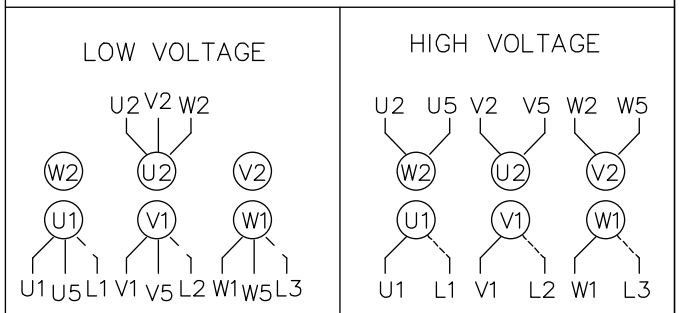

LINE VOLTAGE	L1	L2	L3	JOIN		
TERMINAL	U1	V1	W1	W2	U2	V2
LOW	U1,U5	V1,V5	W1,W5	---	U2,V2,W2	---
HIGH	U1	V1	W1	U2,U5	V2,V5	W2,W5

NEMA MARKINGS

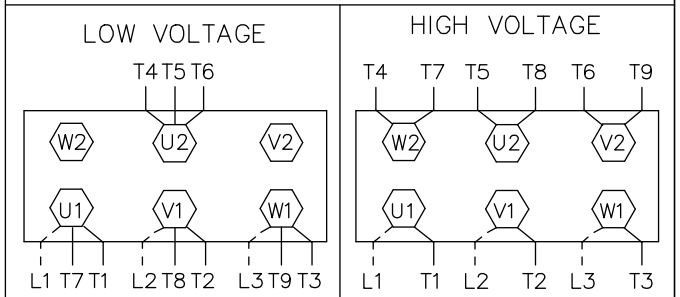

LINE VOLTAGE	L1	L2	L3	JOIN		
TERMINAL	U1	V1	W1	W2	U2	V2
LOW	T1, T7	T2, T8	T3, T9	---	T4,T5,T6	---
HIGH	T1	T2	T3	T4, T7	T5, T8	T6, T9

NO.	REVISION	BY & DATE	CHK
01	NEMA LV CONNECTION WAS INCORRECT	RLW 8/4/03	

TOLERANCES UNLESS SPECIFIED

DEC.	INCHES
.X	±.1
.XX	±.01
.XXX	±.005
.XXXX	±.0005
ANG	±1/2°

LEESON — ELECTRIC MOTORS GEARMOTORS AND DRIVES

TITLE: EXTERNAL WIRING DIAGRAM
3 PHASE – DUAL VOLTAGE – W/TERM BLOCK

MAT'L. IEC/NEMA MARKINGS

FINISH THERMAL TRANSFER

CAD FILE 00546501

RFP

DIST

DRAWN MGM 12/3/02
CHK
APPD
SCALE 1=1
REF 00537703
FMF
PREV

SIZE A | DRAWING NO. 005465-01 | REV. 01