SS622240

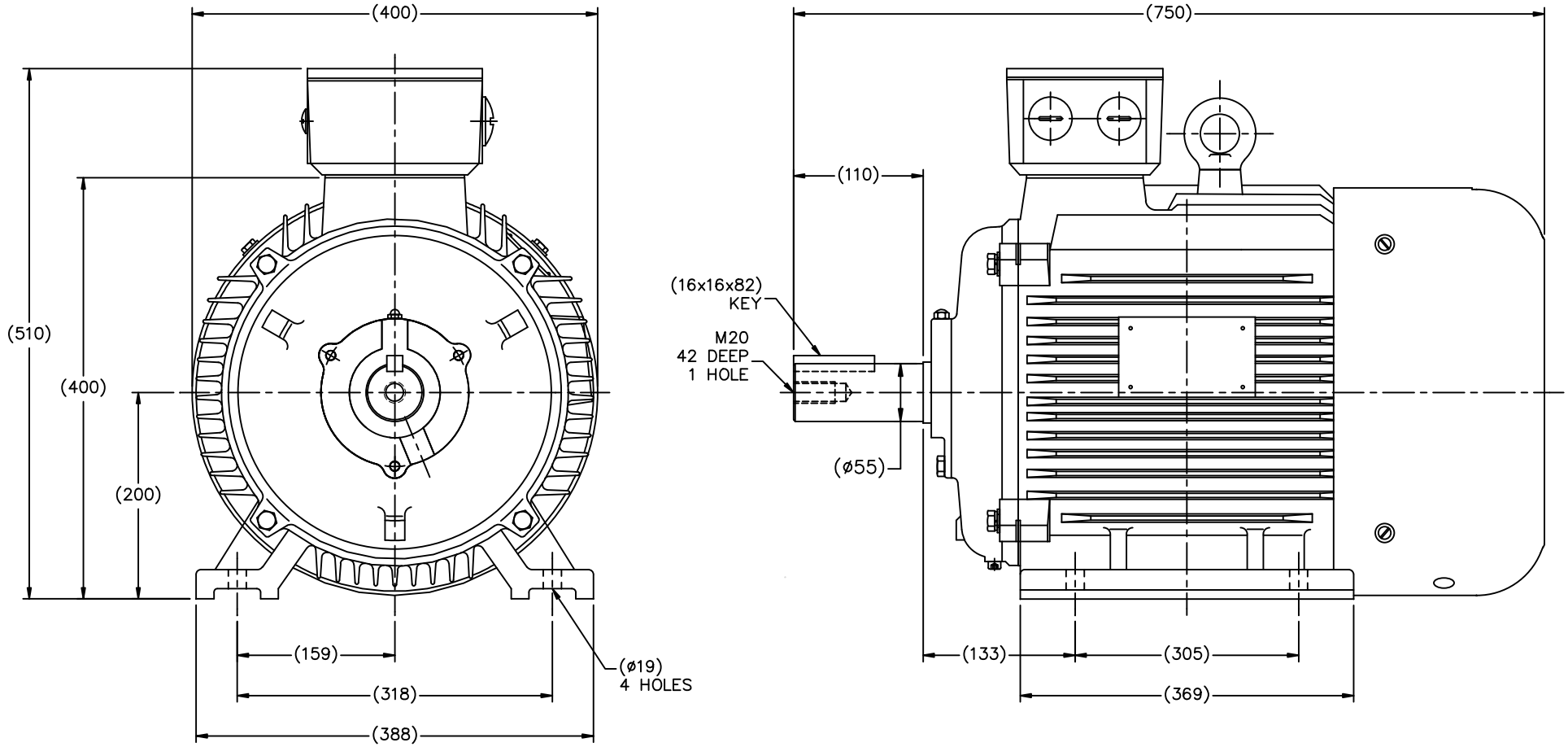

(MAY NOT BE DRAWN TO SCALE)

(DIMENSIONS ARE IN MILLIMETERS)

FRAME	PART #
DF200L	193327.60 193330.60 193328.60 193323.60 193326.60

NO.	REVISION	BY & DATE	CHK

TOLERANCES UNLESS SPECIFIED	
DEC.	METRIC
.X	±2.5
.XX	±.76
.XXX	±.127
.XXXX	±.0127
ANG	±7'30"

REGAL-BELOIT CORPORATION

TITLE OUTLINE – IEC PREMIUM DF200L–2, 4, 6

MAT'L.

FINISH

CAD FILE SS622240

RFP 11–18–2010

DIST

SIZE B

DRAWING NO. SS622240

PAGE OF

REV.

DRAWN MSG 11–17–2010

CHK MJS 11–18–2010

APPD SB 11–18–2010

SCALE 1=4

REF

FMF HEBEI

PREV

THIS DRAWING IN DESIGN AND DETAIL IS OUR PROPERTY AND MUST NOT BE USED EXCEPT IN CONNECTION WITH OUR WORK ALL RIGHTS OF DESIGN AND INVENTION ARE RESERVED
THIS IS AN ELECTRONICALLY GENERATED DOCUMENT – DO NOT SCALE THIS PRINT