Browning®

Emerson Power Transmission
P. O. Box 687
MAYSVILLE, KY 41056
Phone: 800-626-2093
www.emerson-ept.com

FORM
8780
Revised
March 2006

TorqTaper® Plus Helical Shaft Mount Speed Reducers Installation and Maintenance Manual

the power of EPT™

EMERSON™
Industrial Automation

Helical Shaft Mount Speed Reducers

Parts Included with Reducer

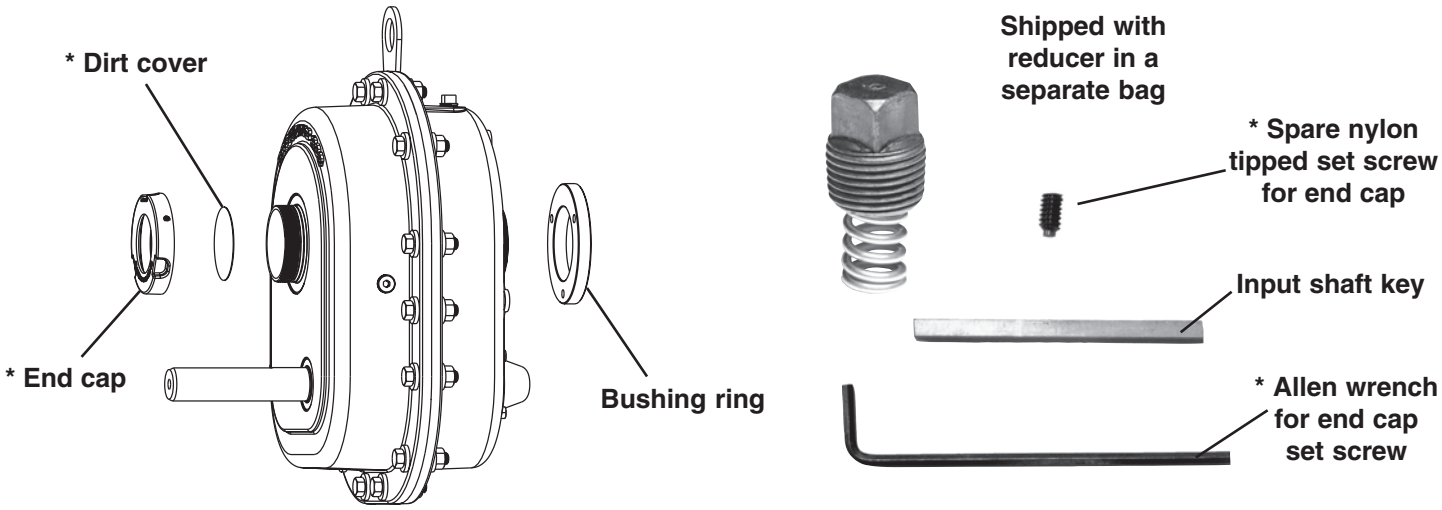

Note: Bushing ring, end cap and dirt cover are installed on the reducer at time of shipment.
*** Items provided for 107 through 315 sizes only.**

Parts Included with Accessories

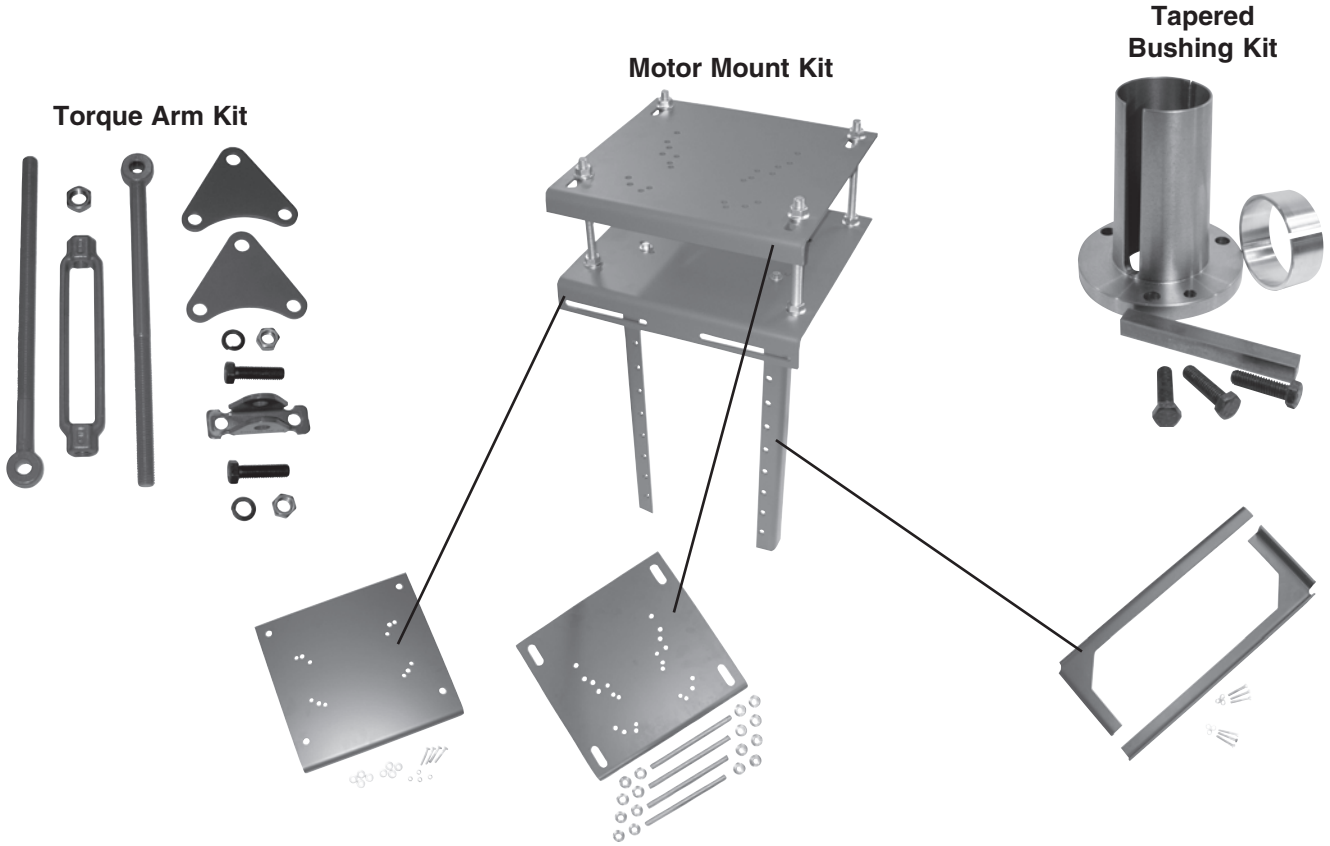

⚠WARNING Disconnect all power before adjusting units.

Helical Shaft Mount Speed Reducers

Table of Contents

Page No.

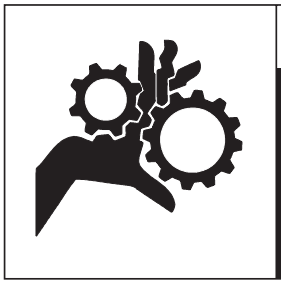

⚠WARNING

High voltage and rotating parts may cause serious or fatal injury.

Turn off power to install or service.

Operate with guards in place.

Read and follow all instructions in this manual.

⚠WARNING Disconnect all power before adjusting units.

1. Shaft Mount Reducer Installation Instructions

For long service and dependable performance, a shaft mount reducer must be rigidly supported and accurately aligned. The following instructions are a step-by-step guide to meeting these requirements for a Browning® TorqTaper Plus shaft mounted reducer. If there is a need to vary from any of these installation instructions, contact the Emerson Power Transmission Application Engineering Department at 1-800-626-2093 before completing the installation.

⚠CAUTION Shaft mounted reducers use bushings to mount the reducer to various driven shaft sizes. When the driven shaft is smaller than the maximum bushing size for the reducer, check the driven shaft and key stresses per ANSI/AGMA Std. 6001-D97 for the application.

⚠WARNING Do not operate without guards. Turn off power to install or service.

1.1 Reducer and Driven Shaft Preparation

1.1.1 The driven shaft diameter is to be within the commercial tolerances for turned and polished round bars. The key and keyseat in the driven shaft are to be in accordance with commercial standards for size, depth, offset, lead and parallelism.

1.1.2 The driven shaft on which the reducer is to be mounted must be straight, clean and free of burrs.

1.1.3 Rotate the driven shaft on which the reducer is to be mounted so the shaft keyseat is in the upward position.

1.1.4 A lifting lug is provided to lift the reducer into position. The lifting lug may be repositioned onto any one of the housing flange bolts as required. After repositioning, all housing flange bolts must be reinstalled to the recommended torque. See bolt torque specificiations section.

⚠WARNING Never lift the reducer by the input shaft. Lifting lug should only be used to lift the weight of the reducer. Do not use lifting lug to lift attached assemblies.
Do not apply grease, oil or an anti-seize compound to the taper bore of the reducer, barrel of the bushing, driven shaft or bushing bore. If any of these substances are applied, equipment failure and personal injury may result.

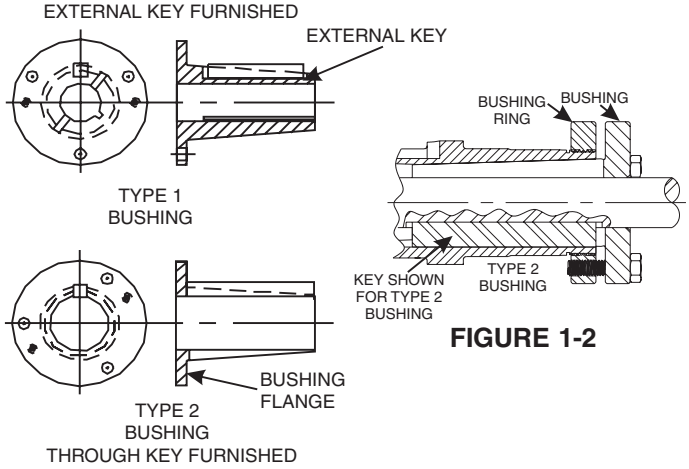

FIGURE 1-2

FIGURE 1-1

1.2 Determine Mounting Configuration - Bushed Bore Models

Due to its unique design, the Browning TorqTaper Plus shaft mounted reducer may be mounted to a driven shaft in a variety of configurations. The following instructions will help determine the correct mounting configuration based on the available driven shaft and key length.

1.2.1 Measure the available driven shaft length "H" (in inches) starting from the end of the driven shaft to the first obstruction or point of interference.

1.2.2 Measure the length of the available keyseat "K" in the driven shaft (in inches) starting from the end of the driven shaft to the end of the usable keyseat.

1.2.3 The following Sections - 1.3, 1.4 and 1.5, show the three standard mounting configurations for the Browning TorqTaper Plus shaft mounted reducer. Refer to the following sections **in sequence** to determine the optimum mounting configuration for the application.

1.2.4 Using the appropriate reducer size in the Tables 1-3, 1-4 and 1-5, compare the measured values for H and K to the tabulated values of H and K. If the measured values for H and K are **greater than** the tabulated values, the mounting configuration shown in the figure may be used. If the measured values for H and K are **less than** the tabulated values, proceed to the next figure and repeat this step.

Note: If the measured values for H and K are less than the tabulated values shown in Table 1-5, contact the Emerson Power Transmission Application Engineering Department at 1-800-626-2093.

⚠WARNING Disconnect all power before adjusting units.

1.3 Front Mounting Configuration with Stabilizer Ring (107 through 315)

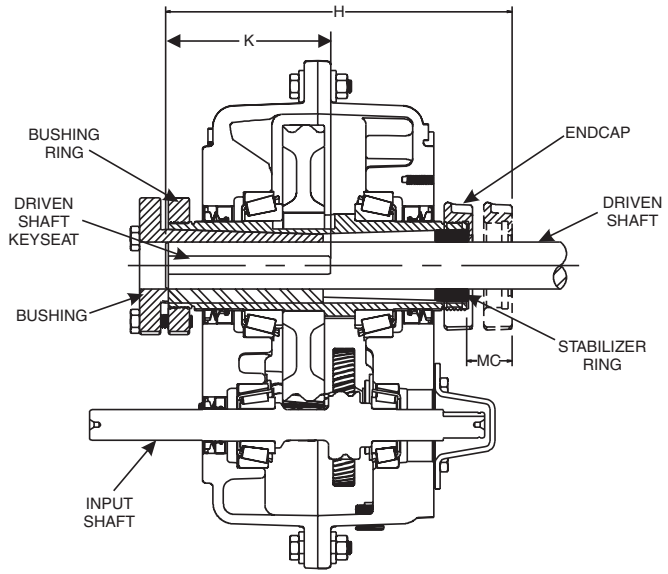

Figure 1-3
Front Mounting Configuration with Stabilizer Ring (107 through 315)

Table 1-3 Dimensions for Front Mounting Configuration with Stabilizer Ring (107 through 315)

REDUCER SIZE	ENDCAP CLEARANCE	MINIMUM SHAFT MOUNTING LENGTH	MINIMUM KEY CONNECTION LENGTH
	MC	H	K
107	0.97	8.25	4.38
115	1.03	8.77	4.63
203	1.15	9.78	5.13
207	1.21	10.35	5.63
215	1.31	11.55	6.13
307	1.44	13.07	7.38
315	1.69	15.19	8.56

1.3.1 On the input shaft side, thread the bushing ring onto the hollow quill until the bushing ring is flush with the end of the quill.

1.3.2 Place the endcap on the driven shaft with the threaded bore facing the end of the shaft. Slide the stabilizer ring on the driven shaft with the small end of the taper toward the end of the shaft.

1.3.3 Install Key(s)

Type 1 Bushing (2 Keys):

- Install the external bushing key into the bushing as shown in Fig 1-1 (External bushing key is supplied with the Bushing Kit)
- Install driven shaft key (customer supplied) into the driven shaft keyseat. Position the end of the driven shaft key even with the end of driven shaft. Retain this key to prevent movement.

1.3.4 Install Reducer

Type 1 Bushing

- Mount the reducer on the driven shaft with the bushing ring facing outward toward the end of the driven shaft.
- Locate the reducer on the driven shaft such that approximately .500 inch of the driven shaft extends out beyond the end of the reducer quill.
- Start the bushing (small end first) by aligning the keyway in the bushing with the key previously installed in the driven shaft.
- Continue moving the bushing into position and rotate the input shaft as required to align the external bushing key with the keyway in the reducer quill.
- Rotate the bushing ring clockwise to align the clearance holes in the bushing with the threaded holes in the bushing ring. (This will require less than ½ turn of the bushing ring).
- Install the bushing capscrews and hand tighten. Reposition the reducer until the end of the driven shaft is even with the end of quill.
- Slide the stabilizer ring into the reducer quill and thread the endcap on hand tight.
- Tighten the bushing capscrews evenly around the bushing flange to the recommended torque as shown in Table 12. See bolt torque specificiations section.
- Tighten the endcap again until hand tight. Tighten the set screw in the endcap to the recommened torque from Table 12.

Type 2 Bushing

- Position the reducer on the driven shaft with the bushing ring facing out toward the end of the shaft.
- Move the reducer into position by rotating the input shaft as required to align the driven shaft key with the keyway in the reducer quill.
- Locate the reducer on the driven shaft such that approximately .500 inch of the driven shaft extends out beyond the end of the reducer quill.
- Start the bushing (small end first) by aligning the keyway in the bushing with the key previously installed in the driven shaft.
- Rotate the bushing ring clockwise to align the clearance holes in the bushing with the threaded holes in the bushing ring. (This will require less than ½ turn of the bushing ring).
- Install the bushing capscrews and hand tighten. Reposition the reducer until the end of the driven shaft is even with the end of quill.
- Slide the stabilizer ring into the reducer quill and thread the endcap on hand tight.
- Tighten the bushing capscrews evenly around the bushing flange to the recommended torque. See bolt torque specificiations section.
- Tighten the endcap again until hand tight. Tighten the set screw in the endcap to the recommened torque from Table 12.

Note: The key length must be sufficient to engage the full length of the bushing. The shaft must engage the full length of the bushing.

Note: There are three (3) series of bushing keys used in the Type 2 bushing system: rectangular, square and offset. In most cases, the key supplied will be rectangular or offset. Use caution when installing rectangular keys as some may visually appear to be square. The key should install in the bushing keyway with a sliding type fit. The key in the driven shaft keyseat should be retained to prevent movement.

⚠WARNING The capscrews must thread into the bushing ring and not the bushing. Threaded holes in the bushing are for removal only. If assembled incorrectly, equipment failure and personal injury may result.

1.4 Rear Mounting Configuration with Stabilizer Ring (107 through 315)

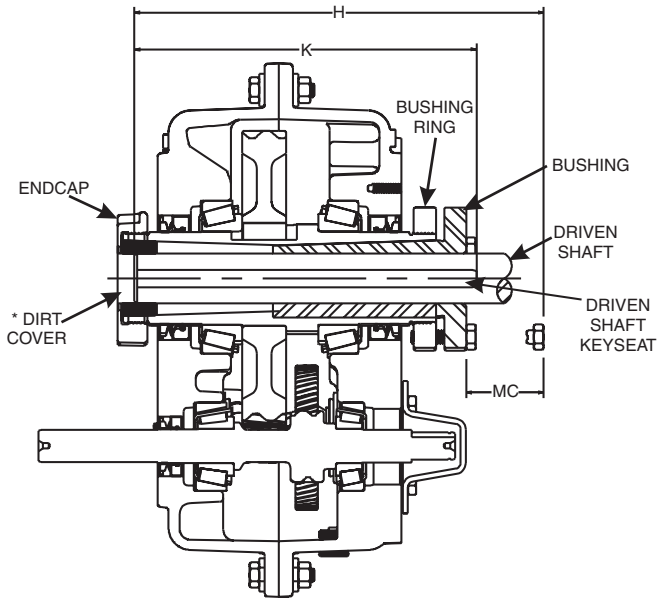

* **Dirt Cover not used if driven shaft extends through hollow quill of gearbox.**

FIGURE 1-4
Rear Mounting Configuration with Stabilizer Ring 107 through 315

Table 1-4 Dimensions for Rear Mounting Configuration with Stabilizer Ring (107 through 315)

REDUCER SIZE	BOLT CLEARANCE	MINIMUM SHAFT MOUNTING LENGTH	MINIMUM KEY CONNECTION LENGTH
	MC	H	K
107	1.75	9.19	7.89
115	1.88	9.74	8.36
203	1.88	10.81	9.43
207	1.88	11.13	9.75
215	1.88	12.23	10.85
307	2.25	14.83	12.39
315	2.75	16.89	14.30

1.4.1 **For Type 1 bushings which require an external key and a shaft key**: Install the key (supplied with the bushing) in the external keyseat of the bushing as shown in Figure 1-1. Install a shaft key (not supplied) in the shaft keyseat and retain to prevent movement. Install the bushing on the shaft, flanged end first, align the bushing keyway with shaft the key and position the bushing over the key.

Note: Key length must be sufficient to engage the full length of the bushing. The shaft must engage the full length of the bushing.

1.4.2 **For Type 2 bushings which require one through key:** Install the bushing on the shaft, flanged end first. Align the keyway in the bushing with the keyseat in the shaft and install the shaft key. Position the shaft key flush against the inside flange surface of the bushing. See Figure 1-2 Shaft Key and Bushing Location.

Note: There are three (3) series of bushing keys used in the Type 2 bushing system: rectangular, square and offset. In most cases, the key supplied will be rectangular or offset. Use caution when installing rectangular keys as some may appear to be square. The key should install in the bushing keyway with a sliding type fit. The key in the shaft keyseat should be retained to prevent movement.

Note: The shaft must engage the full length of the bushing.

1.4.3 On the side opposite of the input shaft, thread the bushing ring onto the hollow quill until the bushing ring is flush with the end of the hollow quill. Rotate the reducer input shaft to align the keyway in the hollow quill with the bushing/shaft key. Position the reducer on the shaft with the bushing ring toward the bushing.

1.4.4 Slide the stabilizer ring onto the driven shaft with the small end of the taper toward the reducer. Insert the stabilizer ring into the quill.

1.4.5 Thread the endcap and dirt cover (not used if driven shaft extends beyond the end of the hollow quill) onto the hollow quill until hand tight. Do not over tighten the endcap.

1.4.6 Rotate the bushing ring clockwise until the tapped holes align with the drilled holes in the bushing flange. Prior to tightening the capscrews, make sure the bushing key is as close as possible to the inside flange of the bushing as shown in Figure 1-2 and the bushing is positioned on the shaft as required in Table 1-4 Dimensions for rear mounting configuration with stabilizer ring.

1.4.7 Install the bushing capscrews and tighten all capscrews evenly around the bushing flange to the recommended torque. See bolt torque specificiations section 12.

1.4.8 Tighten the endcap again until hand tight. Tighten the setscrew to the recommended torque. See bolt torque specificiations section 12.

⚠WARNING Capscrews must thread into the bushing ring and not the bushing. Threaded holes in the bushing are for removal only. If assembled incorrectly, equipment failure and personal injury may result.

1.5 Rear Mounting Configuration Without Stabilizer Ring (107 through 608)

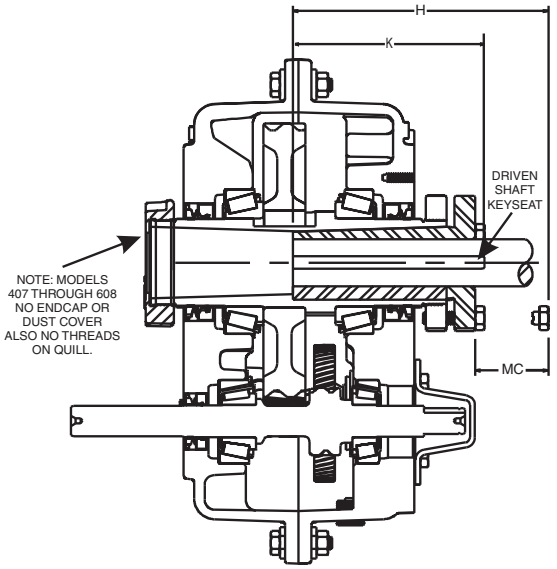

FIGURE 1-5
Rear Mounting Configuration without Stabilizer Ring (107 through 608)

Table 1-5 Dimensions for Rear Mounting Configuration

REDUCER SIZE	BOLT CLEARANCE	MINIMUM SHAFT MOUNTING LENGTH	MINIMUM KEY CONNECTION LENGTH
	MC	H	K
107	1.88	6.25	4.38
115	1.88	6.50	4.63
203	1.88	7.00	5.13
207	1.88	7.50	5.63
215	1.88	8.00	6.13
307	2.25	9.75	7.38
315	2.75	11.50	8.56
407	2.50	10.63	8.12
415	2.88	12.88	10.00
507	3.25	14.50	11.25
608	3.25	15.25	12.00

1.5 Rear Mounting Configuration without Stabilizer Ring (107 through 608)

1.5.1 **For Type 1 bushings which require an external key and a shaft key:** Install the key (supplied with the bushing) in the external keyseat of the bushing as shown in Figure 1-1. Install a shaft key (not supplied) in the shaft keyseat and retain to prevent movement. Install the bushing on the shaft, flanged end first, align the bushing keyway with the shaft key and position the bushing over the key.

Note: The key length must be sufficient to engage the full length of the bushing. The shaft must engage the full length of the bushing.

1.5.2 **For Type 2 bushings which require one through key:** Install the bushing on the shaft, flanged end first. Align the keyway in the bushing with the keyseat in the shaft and install the shaft key. Position the shaft key flush against the inside flange surface of the bushing. See Figure 1-2 shaft key and bushing location.

Note: There are three (3) series of bushing keys used in the Type 2 bushing system: rectangular, square and offset. In most cases, the key supplied will be rectangular or offset. Use caution when installing rectangular keys as some may appear to be square. The key should install in the bushing keyway with a sliding type fit. The key in the shaft keyseat should be retained to prevent movement.

Note: The shaft must engage the full length of the bushing.

1.5.3 On the side opposite of the input shaft, thread the bushing ring onto the hollow quill until the bushing ring is flush with the end of the hollow quill (no threads on sizes 407 through 608 where bushing ring is held in place by snap ring). Rotate the reducer input shaft to align the keyway in the hollow quill with the bushing/shaft key. Position the reducer on the shaft with the bushing ring toward the bushing.

1.5.4 This instruction is for size 107 through 315 only. Thread the endcap and dirt cover onto the hollow quill until it bottoms out. Tighten the setscrew to the recommended torque, do not overtighten. See bolt torque specifications section 12.

1.5.5 Rotate the bushing ring clockwise until the tapped holes align with the drilled holes in the bushing flange. Prior to tightening the capscrews, make sure the bushing key is as close as possible to the inside flange of the bushing as shown in Figure 1-2 and the bushing is positioned on the shaft as required in Table 1-4 dimensions for rear mounting configuration with stabilizer ring.

For 407 through 608, the shaft must engage full length of the bushing. Install the bushing capscrews and tighten all capscrews evenly around the bushing flange to the recommended torque. See bolt torque specifications section 12.

1.6 Installation Instructions Finished Bore Model

1.6.1 The shaft on which the reducer is to be mounted must be straight, clean and free of burrs. Lubricate the shaft to ease the mounting of the reducer. (Anti-fretting grease is recommended for finished bore only.) A lifting lug is provided to lift the reducer into position.

⚠WARNING (The lifting lug should be only be used to lift the weight of the reducer. Do not use the lifting lug to lift attached assemblies to avoid overloading the lifting lug.) This lifting lug may be repositioned onto any one of the housing flange bolts as required. Make sure all capscrews are reinstalled and torqued to proper values. (See Table No. 1). Never lift a reducer by its shaft.

⚠WARNING Disconnect all power before adjusting units.

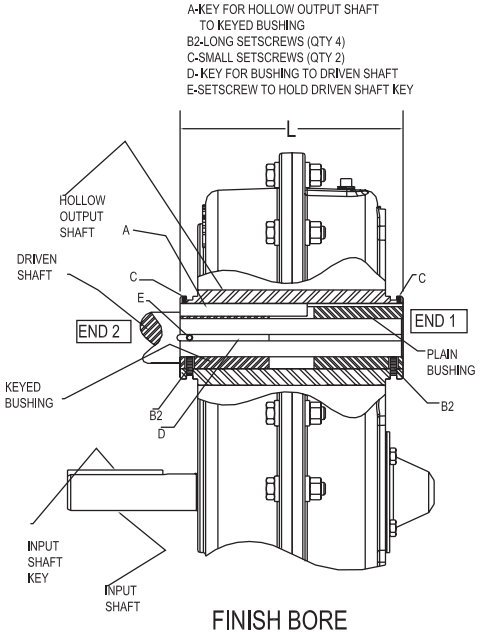

FINISH BORE
WITH BUSHING KIT
FIGURE 1-6A

⚠WARNING Straight bushing kits adapt the gearbox to smaller shafts, which increases the stress on the shaft and the key. To avoid possible damage to the gearbox and attached equipment, the driven shaft and key must be designed in accordance with ANSI/ AGMA 6001-D97.

1.6.2 Installation with Finished Bore Bushing Kit

The following items are included with the Finished Bore Bushing Kit:

1) One - keyed bushing
2) One - plain bushing (no keyways)
3) Four - long setscrews
4) One - key for connection of keyed bushing to driven shaft
5) One - setscrew for holding key to driven shaft

Refer to Figure 1-6A for illustrations of where each of these items are used.

1.6.2.1 The shaft on which the reducer is to be mounted must be straight, clean and free of burrs. Lubricate the shaft to ease the mounting of the reducer. (Anti-fretting grease is recommended for finished bore only.) A lifting lug is provided to lift the reducer into position.

1.6.3 Installation Finished Bore with Bushing Kit

1.6.3.1 Refer to Figure 1-6A "Finish Bore with Bushing Kit" for the following procedure.
Install the key "D" in driven shaft with the end of key against the shoulder on the driven shaft. If there is no shoulder, position this end of the key a distance L from end 1 (value of L from Table 1-6A).

1.6.3.2Place the keyed bushing on the driven shaft with the setscrews near end 2 and move the keyed bushing against the driven shaft shoulder or a distance L from end 1.Tighten the setscrew "E" to hold the keyed bushing and key in place.

1.6.3.3 Install the key "A" in the keyseat on the outside of the keyed bushing. The end of this key should be even with the end of the keyed bushing at end 2 (This key is shipped with the gearbox, not in the bushing kit).

1.6.3.4 Rotate the input shaft until the keyway in the hollow output shaft is aligned with the key "A", then move the gearbox into position with end of the hollow output shaft against shoulder on driven shaft.

1.6.3.5 Align the clearance holes in the plain bushing with the setscrews in the hollow output shaft. Remove the four setscrews from the hollow output shaft. Insert the plain bushing into the hollow output shaft until the end of the bushing is even with the end of the hollow output shaft at end 1.

1.6.3.6 Remove setscrew "C" on end 1. Tighten setscrew "C" on end 2 to torque as shown in Table 1-6B. Insert the four setscrews that came in bushing kit (shown as "B2"). Confirm that these 4 setscrews are through the bushings and pressing on the driven shaft, then tighten these 4 setscrews to torque as shown in Table 1-6B.

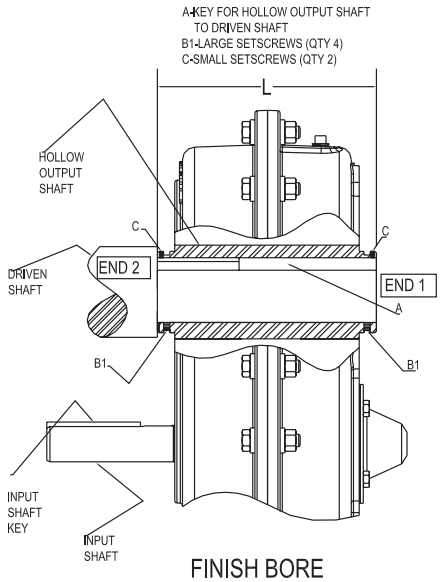

FINISH BORE
NO BUSHINGS
FIGURE 1-6B

1.6.4 Installation Finished Bore without Bushing Kit

Refer to Figure 1-6B "Finish Bore No Bushings" for the following procedure.

1.6.4.1 Insert the key into the driven shaft with the end of the key even with the end of the hollow output shaft at end 1.

1.6.4.2 Rotate the input shaft until the keyway in the hollow output shaft is aligned with the key in the driven shaft, then slide the gearbox on the shaft until the hollow output shaft is against the shoulder on the driven shaft. If the driven shaft has no shoulder, position the gearbox with the end of the driven shaft even with the end of the hollow output shaft at end 1.

1.6.4.3 Tighten the setscrew "C" at end 1 to the torque as shown in Table 1-6B.

1.6.4.4 Remove the setscrew "C" at end 2.

1.6.4.5 Tighten the four setscrews "B1" to torque as shown in Table 1-6B.

⚠WARNING Disconnect all power before adjusting units.

Table 1-6A

Reducer Size	Minimum Shaft Length "L"
107	6.52
115	7.13
203	8.45
207	8.77
215	10.25
307	11.70
315	13.00
407	10.63
415	12.46
507	13.52
608	16.50

Table 1-6B

Setscrew Size (Dia.)	Tightening Torque (in-lbs)
#8 (.164)	20
#10 (.190)	33
1/4 (.250)	87
3/8 (.375)	288
1/2 (.500)	624

2. Torque Arm Installation Instructions (107 through 608)

⚠ DANGER

Removing torque arm when load is applied to gearbox can cause serious injury or death. The motor and gearbox must be properly secured and load removed before assembly or disassembly of the torque arm or components.

Torque Arm Tension Mounting Procedure:

- Determine the output shaft direction of rotation.
- The gearbox will attempt to rotate in the opposite direction.
- Mount the Torque Arm (in tension) by pulling against the gearbox rotation.

Note: The above instructions are for the shaft mount gearbox used as a speed reducer. For the unusual application where the gearbox is used as a speed increaser, contact Application Engineering for Torque Arm mounting procedures.

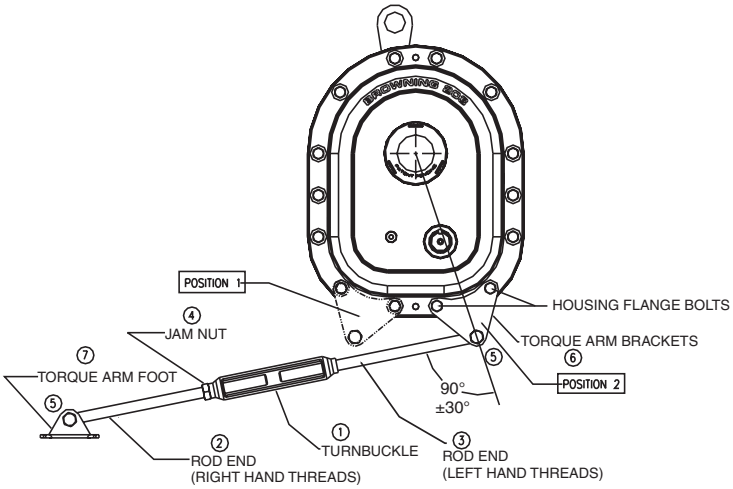

Figure 2-1

The torque arm kit contains the following:

1) One - turnbuckle
2) One - rod end with right hand threads
3) One - rod end with left hand threads
4) One - jam nut with right hand threads
5) Two - bolt/lockwasher/nut combinations for mounting one rod end to the foot and the other rod end to the torque arm brackets
6) One - pair torque arm brackets
7) One - torque arm foot

2.1 Standard Mounting:

2.1.1 The torque arm brackets mount in either Position 1 or Position 2 (shown in Figure 2-1). Remove the housing flange bolts and attach the torque arm brackets to the gearbox. (Do not reinstall flat washers on the bolts).

2.1.2 Tighten the flange bolts to the recommended torque as shown in Table 2-1.

2.1.3 Thread the jam nut onto the rod end with the right hand threads, and then thread this rod end into the turnbuckle. Thread the rod end with left hand threads into the opposite end of the turnbuckle.

CAUTION: Both rod ends must extend into the opening of the turnbuckle a minimum of 1/2 inch during installation and when the gearbox is operating.

2.1.4 Mount the reducer to the shaft following the procedures as described in the installation instructions for the reducer and bushing kits.

2.1.5 Bolt the torque arm foot to a rigid foundation. (Foot bolts are customer supplied Grade 5 or stronger).

NOTE: The torque arm foot must be in-line with torque arm brackets within 1/2 inch per foot of torque arm length.

CAUTION: Mount the torque arm foot in a location such that the torque arm is in tension when the gearbox is operating under load. The torque arm foot in Figure 2-1 is correctly mounted for a clockwise output shaft rotation. A counter-clockwise rotation of the output shaft requires mounting the torque arm foot to the right side of the mounting brackets.

2.1.6 Install the torque arm between the torque arm brackets and the torque arm foot. Tighten the bolts to the recommended torque from Table 2-1. A line through the hollow output shaft and the center of the torque arm bracket must be at an angle of 90° to the centerline of the torque arm within 30 ° (as shown in Figure 2-1).

2.1.7 Adjust the turnbuckle to position the gearbox in the correct position, and then tighten the jam nut against the turnbuckle.

⚠WARNING Disconnect all power before adjusting units.

2.2 Reverse Load Mounting:

Two torque arms are installed so that one or the other of the torque arms is in tension for either direction of loading. Figure 2-2 shows this mounting arrangement.

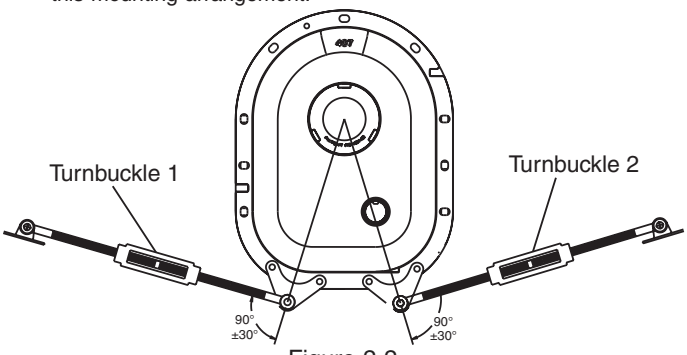

Figure 2-2

2.2.1 Install the torque arm at Position 1 as described in -"Standard Mounting" (Figure 2-1). Mount the second torque arm and tighten the turnbuckle by hand until clearance is eliminated from torque arm assemblies. Rotate turnbuckle 2 an additional one-quarter turn tighter and tighten jam nuts on both torque arm 1 and 2.

Table 2-1 Torque Value in Foot-Pounds

GEARBOX SIZE	FLANGE BOLT		BRACKET AND FOOT		FOOT TO FOUNDATION	
	SIZE	TORQUE	SIZE	TORQUE	SIZE	
107	5/16	16	1/2	65	3/8	CUSTOMER SUPPLIED GRADE 5 MINIMUM
115	3/8	29	1/2	65	3/8	
203	7/16	46	1/2	65	3/8	
207	1/2	70	5/8	130	7/16	
215	1/2	70	5/8	130	7/16	
307	5/8	140	3/4	235	1/2	
315	5/8	140	1	570	5/8	
407	3/4	250	1	570	5/8	
415	3/4	250	1 1/4	1045	3/4	
507	3/4	250	1 1/4	1045	3/4	
608	3/4	250	1 1/4	1045	3/4	

2.3 Side Motor Mount:

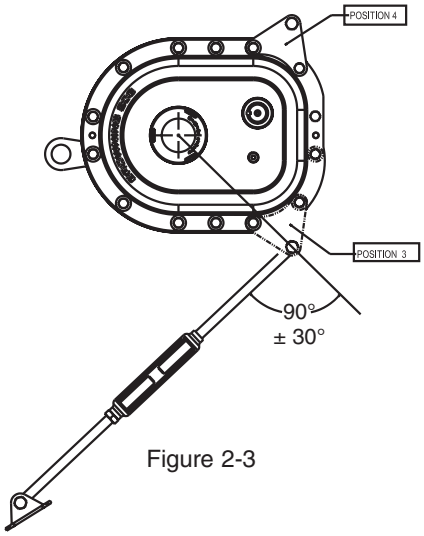

Figure 2-3

2.3.1 Position 3 or Position 4, as shown in Figure 2-3, is required for side mounting of a motor mount kit to provide clearance for the motor mount supports.

2.4 Belt Tensioning Mounting:

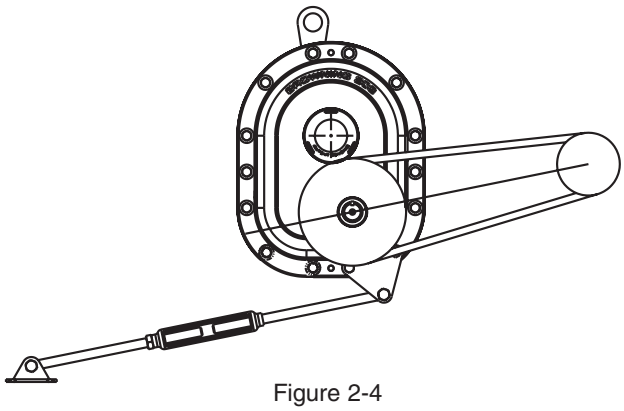

Figure 2-4

2.4.1 The mounting configuration, as shown in Figure 2-4, uses the torque arm for adjustment of the belt drive.

2.4.2 Mount the torque arm as described in "Standard Mounting."

2.4.3 Locate the centerline of the belt drive within 30 degrees of the centerline of the torque arm and on the opposite side (as shown in Figure 2-4).

2.4.4 Using the torque arm, adjust the belt tension per the belt manufacturer's instructions.

Note: Sheaves for the input shaft of the reducer must not be smaller than the diameter shown in the selection table from which the reducer was selected. Smaller diameter sheaves may result in reduced bearing life.

3. Lubrication Instructions

Browning TorqTaper Plus reducers are shipped without oil. Before operating, the reducer must be filled with oil to the proper level to avoid equipment and/or personal injury. Refer to lubrucation specifications section for correct lube selection.

Browning TorqTaper Plus reducers may be operated on horizontal shafts and on vertical shafts.

Note: TorqTaper seals are grease-packed at assembly. Some purging of grease from around the rotating flingers during initial hours of operation is normal and should be expected.

⚠WARNING

Reducer shipped without oil. Fill to proper level before operating to avoid equipment damage and/or personal injury. Do not use lubricants with anti-wear/extreme pressure additives, in units with internal backstops - these additives decrease the backstop's ability to prevent reverse rotation and will result in backstop failure which could cause personal injury.

⚠WARNING Disconnect all power before adjusting units.

3.1 Horizontal Shaft Mounting

3.1.1 Figure 3-1 shows the breather, magnetic drain and oil level plug locations for the four standard mounting positions. The breather is installed in the fill hole in the top and the magnetic drain plug is installed in the bottom of the reducer in its relative position. Use oil level "A" for speeds at or below those shown in Table No. 3-1 Use oil level "B" for speeds above those shown in Table No. 3-1. For reducers mounted in other positions, refer to steps 3.1.4 or 3.2.

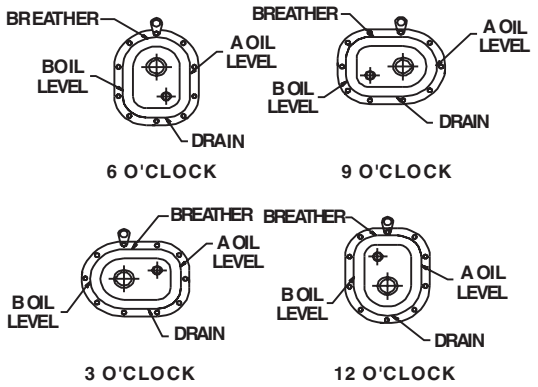

FIGURE 3-1

Table 3-1 Output Speed for Oil Level Selection

REDUCER SIZE	OUTPUT RPM FOR REDUCER RATIOS				
	5:1	9:1	15:1	25:1	35:1
107	400	184	120	70	40
115	382	173	120	70	40
203	326	128	113	70	40
207	275	112	99	70	40
215	236	97	85	70	40
307	204	90	79	70	40
315	202	85	62	70	40
407	176	-	63	55	-
415	156	-	53	46	-
507	-	-	47	41	-
608	-	-	46	40	-

3.1.2 Shaft mount reducers require different amounts of oil in the various mounting positions. For the convenience of having enough oil at the installation site, Table No. 3-2 shows the approximate amount of oil for the position requiring the most oil.

3.1.3 Refer to lubrication specifications section for the proper viscosity of oil. Remove the oil plug and breather. Fill with oil until it begins to run out the oil level hole. Replace the oil level plug and install breather as shown in Figure 3-1.

⚠WARNING Petroleum based and synthetic lubricants which contain anti-wear/extreme pressure additives must not be used in units with internal backstops. These additives decrease the backstop's ability to prevent reverse rotation. Consequently, backstop failure will occur.

3.1.4 Operating positions may vary as much as 10° from the four positions shown in Figure 3-1 and still have adequate oil by using the indicated oil levels. If it is necessary to vary the operating position less than 10° from these positions, complete the following steps. For reducers operating more than 10° from standard position, contact the Emerson Power Transmission Application Engineering Department .

⚠WARNING See torque arm installation instructions section before releasing the torque arm.

3.1.4.1 Release the torque arm.

3.1.4.2 Rotate the reducer to the nearest of these standard positions.

3.1.4.3 Fill to the proper level.

3.1.4.4 Replace oil level plug.

3.1.4.5 Rotate the reducer back to its operating position and reconnect the torque arm.

Note: Reducers operating other than standard position should have a stand pipe or sight glass installed and marked at proper oil level in order to monitor oil level while in operating position. Contact the Emerson Power Transmission Application Engineering Department for assistance in selecting and installing required components.

Table 3-2
Approximate Oil Capacities in Quarts

Output Orientation	Horizontal															
Ratio	5:1								9, 15, 25, 35:1							
Oil Level	A				B				A				B			
Mounting Position	3	6	9	12	3	6	9	12	3	6	9	12	3	6	9	12
107	2.0	2.0	2.5	2.0	1.0	1.0	1.5	1.5	2.0	2.0	2.0	2.0	1.0	1.0	1.5	1.5
115	3.0	3.0	3.0	3.0	1.5	2.0	2.0	2.0	3.0	3.0	3.0	3.0	1.5	2.0	2.0	2.0
203	5.0	5.0	6.0	5.0	2.5	3.0	3.5	3.5	4.5	4.5	5.5	5.0	2.5	3.0	3.5	3.5
207	6.5	7.0	7.5	7.0	3.0	4.0	4.5	4.5	6.0	6.5	7.5	7.0	3.0	4.0	4.5	4.5
215	9.0	10.0	11.5	10.5	4.0	5.5	7.0	6.0	8.0	9.0	11.0	10.0	4.0	5.0	7.0	6.0
307	13.0	13.5	15.5	14.0	7.0	8.5	10.0	9.5	12.0	12.5	15.0	14.0	7.0	8.0	10.0	9.5
315	17.0	19.5	19.5	17.5	10.0	12.5	13.0	11.0	15.5	18.0	19.0	17.0	9.5	11.5	13.0	11.0
407	21.5	18.0	16.0	18.0	13.0	11.0	7.5	11.5	19.0	15.5	16.0	17.5	11.0	9.0	7.5	11.5
415	34.5	29.0	25.5	28.5	21.5	18.5	12.5	19.0	30.5	24.5	25.5	27.5	18.0	15.5	12.5	18.5
507	-	-	-	-	-	-	-	-	47.5	39.0	39.0	43.0	28.5	24.5	19.0	28.5
608	-	-	-	-	-	-	-	-	67.0	58.5	57.0	61.5	42.5	38.0	30.5	40.5

⚠WARNING Disconnect all power before adjusting units.

Table 3-2 (continued)
Approximate Oil Capacities in Quarts

Output Orientation	Vertical			
Ratio	5:1		9, 15, 25, 35:1	
Mounting Position	Input Shaft Up	Input Shaft Down	Input Shaft Up	Input Shaft Down
107	2.50	2.50	2.50	2.50
115	3.50	4.00	3.50	4.00
203	6.00	7.00	6.00	7.00
207	8.50	9.00	8.50	9.00
215	13.00	12.50	12.00	12.00
307	18.50	20.00	17.50	19.00
315	24.00	26.00	22.50	25.00
407	21.50	21.00	19.00	19.50
415	42.00	42.00	38.50	38.50
507	-	-	61.50	61.00
608	-	-	92.50	92.50

3.2 Vertical Shaft Mounting

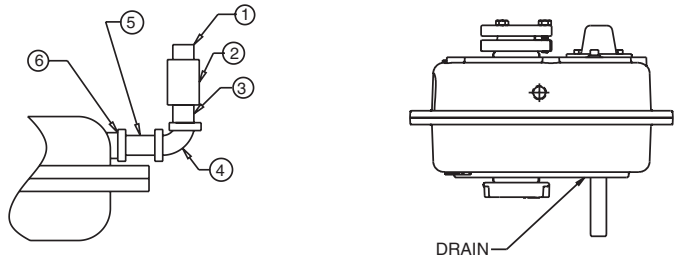

FIGURE 3-2

The vertical mounting kit for sizes 107 through 608 SMTP shaft mount reducers consists of six parts:

1. Breather
2. 3/8" coupling
3. 3/8" close nipple
4. 3/8" elbow
5. 3/8" x 2 1/2" nipple
6. 3/4 x 3/8 reducer bushing (used only on sizes 207 through 608)

Refer to figure for assembly of parts.

3.3 Filtered Breather Kit

The filtered breather kit (107-608SMTP FBK) uses a standard automotive oil filter (FRAM Part number P1654A or equivalent). Kit fits all sizes of the SMTP shaft mount reducers from a 107SMTP thru a 608SMTP.

Sizes 107 thru 203 use a pipe bushing (included in the kit) to adapt the

3/8 NPT in the gearbox housing to a 3/4 NPT. The filter adapter can then be threaded into this bushing. The bushing is not required on 207SMTP thru 608SMTP.

The filtered breather mounting location is determined by the procedure outlined in the Installation and Maintenance Manual – Form 8780 (Section 3.1)

On 307SMTP and larger, the 3/4 close nipple and coupling are required to provide clearance of the filter to gearbox flange.

Note: Change the filter canister after each 500 hours of operation. When operated in heavily contaminated areas, the replacement frequency should be every 250 hours.

3.3.1 Figure 3-2 shows the breather, magnetic drain and oil level plug locations for the two vertical shaft mounting positions. The breather is installed in the fill hole in the top and the magnetic drain plug is installed in the bottom of the reducer in its relative positions.

3.3.2 Determine the location of the proper oil level plug and attach the enclosed “Oil Level” label pointing to that plug.

3.3.3 Refer to lubrication specifications section 14 for the proper viscosity of oil. Remove the oil level plug and fill through the breather location until it begins to run out the oil level hole. Install the oil level plug and the breather.

3.4 Relubrication Maintenance Schedule

3.4.1 Initial Oil Change

After approximately one week or 100 hours of operation, drain the oil. Clean the magnetic drain plug. Refer to lubrication specifications section for the proper viscosity of oil. Refill with fresh oil to the appropriate oil level.

3.4.2 Regularly Scheduled Oil Changes

Refer to lubrication specifications section for the proper viscosity of oil.

3.4.3 Petroleum based lubricants—For normal operating conditions, oil should be changed every 2,500 hours or six months, whichever occurs first. If temperatures vary by season, the oil should be changed to suit the ambient operating temperature. Experience will determine the best interval for each specific application.

3.4.4 Synthetic lubricants—Some types of synthetic lubricants can be used in shaft mount reducers. See lubrication specification Table 13. These lubricants can extend oil change intervals to as much as 8,000 to 10,000 hours based on operating temperatures and lubricant contamination. If temperatures vary by season, the oil should be changed to suit the ambient operating temperature.

⚠CAUTION Certain mineral oils and synthetics are not capable of being mixed. Please contact the lubricant supplier for information regarding lubricant miscibility and proper cleansing procedures.

⚠WARNING Disconnect all power before adjusting units.

3.5. Lubrication Selection

⚠WARNING

Petroleum-based and synthetic lubricants which contain anti-wear/extreme pressure additives must not be used in units with internal backstops. These additives decrease the backstop's ability to prevent reverse rotation and will result in backstop failure.

Relubrication
After approximately one week or 100 hours of operation, drain and replace with fresh oil. Change oil at least once a year thereafter; more often if the atmosphere is damp or dusty. Note: Reducers operating more than 10° from standard position should have a stand pipe or sight glass installed and marked at proper oil level in order to monitor oil level while in operating position. Contact our Application Engineering Department for assistance in selecting and installing required material.

Petroleum-Based Lubricants - For normal operating conditions, oil should be changed every 2,500 hours or six months, whichever occurs first. If temperatures vary by season, the oil should be changed to suit the ambient operating temperature.

Synthetic Lubricants - Some type of synthetic lubricants can be used in shaft mount reducers. These lubricants can extend oil change intervals to as much as 8,000 to 10,000 hours based on operating temperatures and lubricant contamination. If temperatures vary by season, the oil should be changed to suit the ambient operating temperature. Experience will determine the best interval for each specific application.

AGMA Oil Viscosity Grades for Ambient Operating Temperature between 14 deg F and 50 deg F											
Output RPM	Reducer Size										
	107-MTP	115-MTP	203-MTP	207-MTP	215-MTP	307-MTP	315-MTP	407-MTP	415-MTP	507-MTP	608-MTP
5-20	5	5	5	5	5	5	5	5	5	5	5
21-40	5	5	5	5	5	5	5	5	5	5	5
41-60	5	5	5	5	5	5	5	5	5	5	5
61-80	5	5	5	5	5	5	5	5	5	5	5
81-100	5	5	5	5	5	5	5	5	5	5	5
101-120	5	5	5	5	5	5	5	5	5	5	5
121-140	5	5	5	5	5	5	5	5	5	-	-
141-160	5	5	5	5	5	5	5	5	5	-	-
161-180	5	5	5	5	5	5	5	5	5	-	-
181-200	5	5	5	5	5	5	5	5	5	-	-
201-220	5	5	5	5	5	5	5	5	4	-	-
221-240	5	5	5	5	5	5	5	4	4	-	-
241-260	5	5	5	5	5	5	4	4	4	-	-
261-280	5	5	5	5	5	5	4	4	4	-	-
281-300	5	5	5	5	5	4	4	4	4	-	-
301-320	5	5	5	5	4	4	4	4	4	-	-
321-340	5	5	5	5	4	4	4	4	4	-	-
341-360	5	5	5	5	4	4	4	4	4	-	-
361-380	5	5	5	4	4	4	4	4	4	-	-
381-400	5	5	5	4	4	4	4	4	4	-	-

AGMA Oil Viscosity Grades for Ambient Operating Temperature between 50 deg F and 95 deg F											
Output RPM	Reducer Size										
	107-MTP	115-MTP	203-MTP	207-MTP	215-MTP	307-MTP	315-MTP	407-MTP	415-MTP	507-MTP	608-MTP
5-20	6	6	6	6	6	6	6	6	6	6	6
21-40	6	6	6	6	6	6	6	6	6	6	6
41-60	6	6	6	6	6	6	6	6	6	6	6
61-80	6	6	6	6	6	6	6	6	6	6	6
81-100	6	6	6	6	6	6	6	6	6	6	6
101-120	6	6	6	6	6	6	6	6	6	6	6
121-140	6	6	6	6	6	6	6	6	6	-	-
141-160	6	6	6	6	6	6	6	6	6	-	-
161-180	6	6	6	6	6	6	6	6	6	-	-
181-200	6	6	6	6	6	6	6	6	6	-	-
201-220	6	6	6	6	6	6	6	6	5	-	-
221-240	6	6	6	6	6	6	6	5	5	-	-
241-260	6	6	6	6	6	6	5	5	5	-	-
261-280	6	6	6	6	6	6	5	5	5	-	-
281-300	6	6	6	6	6	5	5	5	5	-	-
301-320	6	6	6	6	5	5	5	5	5	-	-
321-340	6	6	6	6	5	5	5	5	5	-	-
341-360	6	6	6	6	5	5	5	5	5	-	-
361-380	6	6	6	5	5	5	5	5	5	-	-
381-400	6	6	6	5	5	5	5	5	5	-	-

⚠WARNING Disconnect all power before adjusting units.

3.6. Lubrication Specifications

Mineral Oils			
AGMA Viscosity Grade @104 Deg. F (40 Deg. C) SSU cST	4 625 - 765 135 - 165	5 918 - 1122 198 - 242	6 1335 - 1631 288 - 352
Mobil® Oil Corporation	DTE Oil Extra Heavy	DTE-Oil BB	DTE Oil AA
Mineral Oils with EP Additives			
AGMA Viscosity Grade @104 Deg. F (40 Deg. C) SSU cST	4EP 625 - 765 135 - 165	5EP 918 - 1122 198 - 242	6EP 1335 - 1631 288 - 352
Mobil Oil Corporation	Mobil Gear 629	Mobil Gear 630	Mobil Gear 632
Synthetic Oils			
AGMA Viscosity Grade @104 Deg. F (40 Deg. C) SSU cST	4 625 - 765 135 - 165	5 918 - 1122 198 - 242	6 1335 - 1631 288 - 352
Mobil Oil Corporation	Mobil SHC 629	Mobil SHC 630	Mobil SHC 632
Synthetic Oils with EP Additives			
AGMA Viscosity Grade @104 Deg. F (40 Deg. C) SSU cST	4EP 625 - 765 135 - 165	5EP 918 - 1122 198 - 242	6EP 1335 - 1631 288 - 352
Mobil Oil Corporation	Mobil Gear SHC 150	Mobil Gear SHC 220	Mobil Gear SHC 320

Mobil is a trademark and/or a trade name of ExxonMobil Corporation. Exxon is a trademark and/or a trade name of ExxonMobil Corporation and is used herein for comparison purposes only and is not a trademark and/or trade name in any way owned, controlled or associated with Emerson Power Transmission Corporation. Emerson Power Transmission does not warrant the accuracy of the information contained in this document. All interchanges should be compared with actual current specifications and/or manufacturing drawings. For a copy of our standard terms and conditions, contact Emerson Power Transmission at 1-800-626-2120.

⚠ WARNING

Reducer shipped without oil. Fill to proper level before operating to avoid equipment damage and/or personal injury. Do not use lubricants with anti-wear/extreme pressure additives, in units with internal backstops - these additives decrease the backstop's ability to prevent reverse rotation and will result in backstop failure which could cause personal injury.

⚠ WARNING Disconnect all power before adjusting units.

4. Screw Conveyor Drive Installation Instructions

A shaft mount reducer can be converted to a screw conveyor drive by installing a screw conveyor drive shaft and adapter as follows:

4.1 Screw Conveyor Drive Adapter and Shaft Installation Instructions Sizes 107 through 315

4.1.1 Remove the bushing ring, endcap and dirt cover from the hollow output shaft.

Note: The endcap and dirt cover may be discarded. Do not discard the bushing ring.

4.1.2 On the side opposite of the input shaft, place a straight blade screwdriver in the housing relief next to the metal shield of the "Barrier" sealing system. Tap the screwdriver blade into the side of the metal shield. Pry the metal shield out of the reducer. Refer to Figure 4-1.

Note: Do not drive the screwdriver into the metal shield more than 1/4".

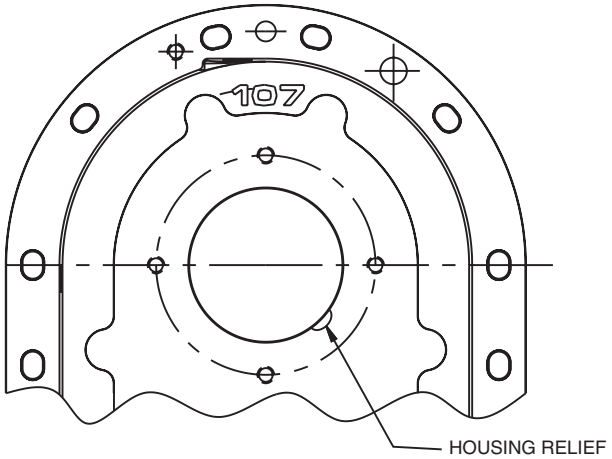

Figure 4-1
Metal Shield Removal Detail

4.1.3 Remove the v-ring from the metal shield. Discard the metal shield. Re-install the v-ring into the same location. When re-installed properly, the lip of the v-ring will contact the face of the oil seal.

4.1.4 Position the screw conveyor adapter with the small pilot end toward the reducer and align the adapter bolt holes to the bolt holes in the housing face.

4.1.5 Install the four (4) capscrews (supplied with the adapter kit). Tighten capscrews to the recommended torque. See bolt torque specifications section 12.

Note: These capscrews have a coating near the end which will provide positive locking of the fastener.

4.1.6 Install the ring seal plate supplied with the adapter or optional seal cartridge in the screw conveyor adapter housing. See section 4.2 lip seal/waste pack seal cartridge instructions section 4.3 lip seal/packing gland seal cartridge instructions for optional sealing installation instructions.

4.1.7 Place shaft key (supplied with kit) in keyseat of screw conveyor drive shaft. Insert the drive shaft into the hollow output shaft of reducer, making sure the shaft key aligns with the keyway in the reducer.

4.1.8 On the input shaft side, thread the bushing ring onto the hollow quill one to two turns past the end of the quill.

4.1.9 On the input shaft side of the hollow output shaft, install drive shaft keeper plate and tighten the retaining bolt (supplied with kit) to the recommended torque. See bolt torque specifications section 12. Insert bolts through keeper plate and thread into bushing ring for future removal.

4.1.10 Attach the screw conveyor drive assembly to the trough end using the four (4) flat head capscrews, flat washers, lock washers and nuts supplied with the trough end. On 6 and 9-inch conveyors, install the trough end to the screw conveyor drive before mounting the trough end to the trough.

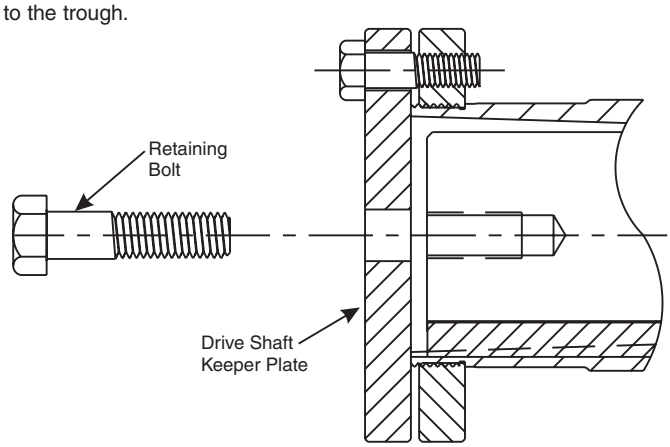

Figure 4-2
Screw Shaft Keeper Plate Installation
Sizes 107 through 315

⚠WARNING Disconnect all power before adjusting units.

4.1.11 Installation Instructions - Shaft Mount Screw Conveyor Drive (Size 407)

4.1.12 Remove the snap ring from the reducer hollow output shaft and remove the bushing ring. Note: The snap ring and bushing ring may be discarded.

4.1.13 Remove the six (6) capscrews from the reducer low speed bearing cover. Do not remove the cover from the housing.

4.1.14 Position the screw conveyor adapter with the small pilot end toward the reducer and align the adapter to the bolt holes in the low speed bearing cover.

4.1.15 Install the six (6) capscrews (supplied with the adapter kit). Note these capscrews have a coating near the end which will provide positive locking of the fastener. Tighten the capscrews to recommended torque values from Table 12. Tighten the capscrews progressively allowing the adapter to pilot into the low speed bearing cover.

4.1.16 Place the shaft key (supplied with the kit) in the keyseat of the screw conveyor drive shaft. Insert the drive shaft into the hollow output shaft of the reducer, making sure the shaft key aligns with the keyway in the reducer.

4.1.17 Install the drive shaft keeper plate and capscrew (supplied with the kit) on the opposite end of the hollow output shaft and tighten the capscrew to the recommended torque value from Table 12. Assure that thread engagement in the shaft is at least 1 1/2 times the capscrew diameter.

4.1.18 Install the steel ring seal plate supplied with the adapter or optional seal cartridge in the screw conveyor adapter housing.

4.1.19 Attach the screw conveyor drive assembly to the trough end using the four (4) flat head capscrews, flat washers, lock washers and nuts supplied with the trough end. On six and nine inch conveyors, install the trough end to the screw conveyor drive before mounting the trough end to the trough.

4.2 Lip Seal/Waste Pack Seal Cartridge Instructions

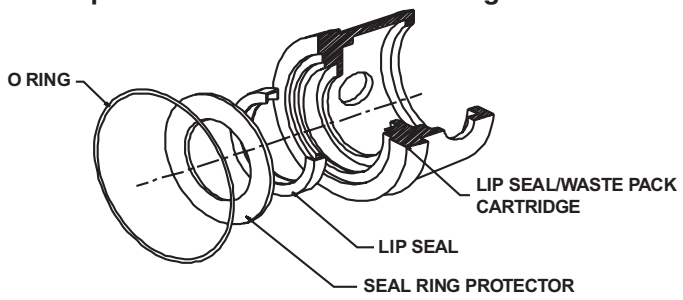

Figure 4-3
Lip Seal/Waste Pack Assembly

4.2.1 Install the lip seal (supplied) or the felt seal (optional) in the front chamber of the seal cartridge housing.

4.2.2 Install the seal cartridge into the adapter housing. Align the anti-rotation pin on the seal cartridge to the slot in the adapter housing.

Note: Install the lip seal with the spring side of the seal toward the reducer.

4.2.3 Install seal protector over shaft even if the lip seal or the felt seal is not used.

4.2.4 Install o-ring in the groove provided on the seal cartridge housing. (Grease or sealant can be used to hold o-ring in place during installation to trough end.)

4.2.5 For sizes 107 through 315 proceed with step 4.1.5 of the screw conveyor drive installation instructions. For size 407 proceed with step 4.1.15.

4.2.6 When step 4.1.8 has been completed, fill seal cartridge cavity with waste packing, if so desired.

Note: Waste packing not supplied.

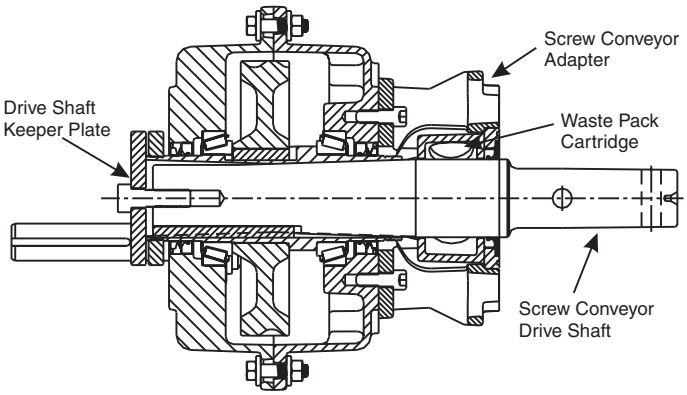

Figure 4-4
Waste Pack Assembly

⚠WARNING Disconnect all power before adjusting units.

4.3 Lip Seal/Packing Gland Seal Cartridge Instructions

4.3.1 Assemble the packing gland piston and the packing gland cartridge with the bolts provided. The pilot of the packing gland piston fits inside the packing gland cartridge bore. Do not tighten the bolts at this time.

4.3.2 Install the packing gland piston and the packing gland cartridge assembly into the adapter housing. Align the anti-rotation pin on the packing gland cartridge to the slot in the adapter housing.

4.3.3 Install the lip seal (supplied) or the felt seal (optional) in the front chamber of the packing gland cartridge housing.

4.3.4 Wrap the packing gland material (supplied) around the seal diameter of the drive shaft and cut the packing to length. Two (2) pieces are required. See Figure 4-6.

Note: Install the lip seal with the spring side of the seal toward the reducer.

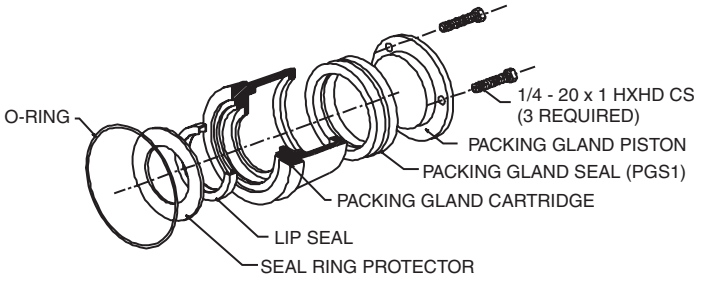

Figure 4-5
Packing Gland Assembly

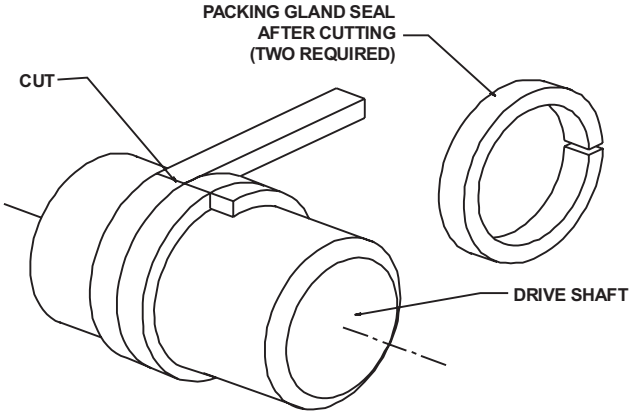

FIGURE 4-6
Packing Gland Assembly
Wrap the packing gland seal around the seal dia. of the drive shaft and cut as shown

4.3.5 Install the o-ring in the groove provided on the seal cartridge housing. (Grease can be used to hold the o-ring in place during installation to the trough end.)

4.3.6 Install the front seal protector ring and proceed with step 4.1.5 of the screw conveyor drive installation instructions.

4.3.7 When step 4.1.8 has been completed, remove the bolts in the packing gland piston cartridge assembly.

4.3.8 Install the two (2) cut-to-length packing materials on the shaft in the packing gland chamber of the seal cartridge housing.

4.3.9 Secure the packing gland piston to the seal cartridge housing with the supplied screws. Tighten screws lightly, allowing the packing to compress on the shaft. Do not over tighten the packing gland.

4.3.10 Under normal material handling operations, observe the packing gland for leakage. Should the packing gland show signs of leakage, shut the reducer drive assembly off and tighten the packing gland screws evenly to compress the packing material to the shaft. Do not over tighten packing gland. Repeat the above procedures until the leakage has been stopped.

Note: Over-tightening of the packing gland can cause excessive temperatures and premature shaft wear.

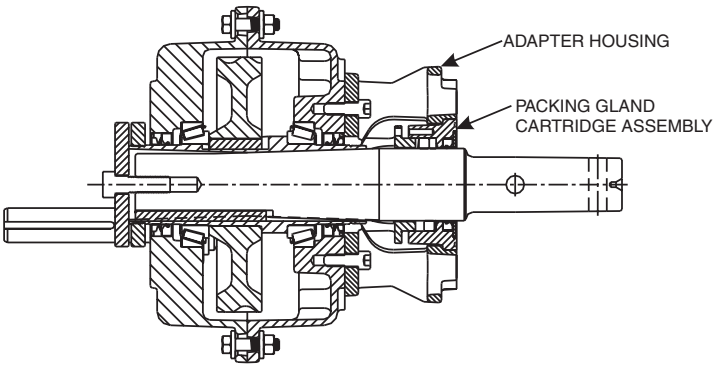

Figure 4-7
Packing Gland Assembly

⚠WARNING Disconnect all power before adjusting units.

5. Motor Mount Installation Instructions

5.1 Top (6 O'Clock) or Bottom (12 O'Clock) Motor Mount Installation Instructions (Size 107 through 315)

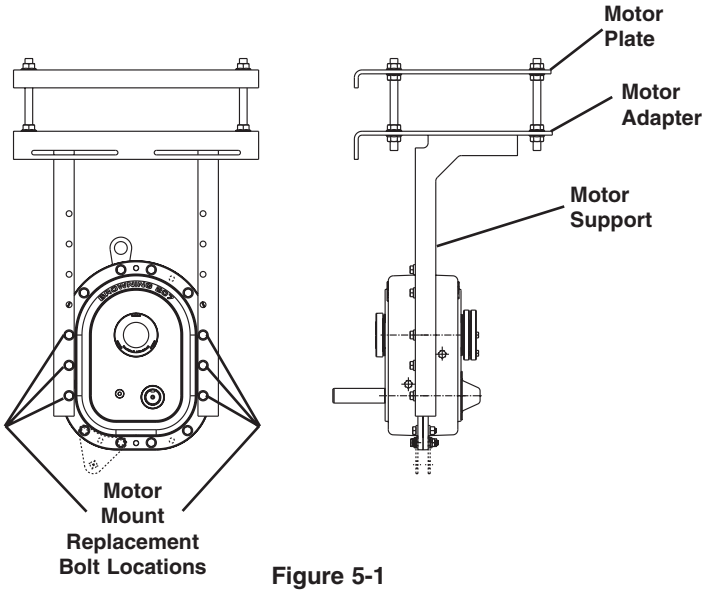

Figure 5-1

5.1.1 Remove the three housing flange bolts and washers on each side as shown in Figure 5-1.

5.1.2 Install the motor supports, using the longer bolts furnished with the motor mount kit. One support is used on each side of the unit on the input shaft side of flange. Additional holes are provided for various center distances.

5.1.3 Install all flange bolts and washers against flange at this time but do not tighten.

5.1.4 Install the motor adapter; using the capscrews provided, tightening the capscrews to the recommended torque. See bolt torque specifications section 12.

5.1.5 Tighten the reducer flange bolts to the recommended torque. See bolt torque specifications section 12.

5.2 Side Motor Mount Installation Instruction (3 O'Clock or 9 O'Clock) (Size 107 through 315)

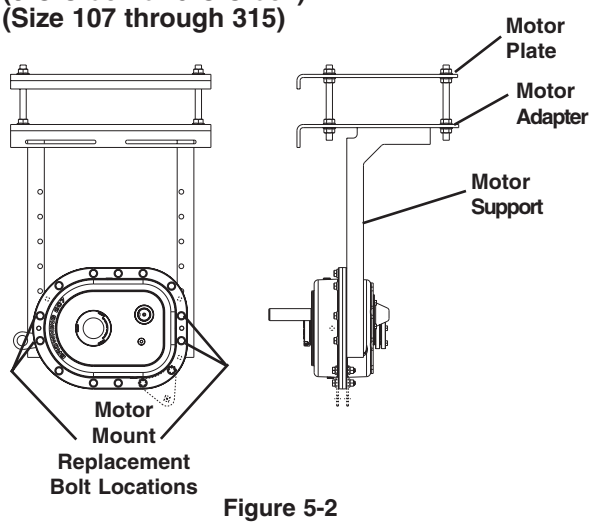

Figure 5-2

5.2.1 Remove the housing flange bolts as shown in Figure 5-2.

5.2.2 Install the motor supports, using the longer bolts furnished with the motor base adapter. One support is used on each side of the unit on the side of flange opposite the input shaft.

5.2.3 Install all flange bolts at this time but do not tighten.

5.2.4 Install the motor adapter; using the capscrews provided, tighten the capscrews to the recommended torque. See bolt torque specifications section 12.

5.2.5 Tighten the reducer flange bolts to the recommended torque. See bolt torque specifications section 12.

5.3 Top (6 O'clock) or Bottom (12 O'Clock) Motor Mount Installation Instructions (Size 407 through 608)

5.3.1 Remove the housing flange bolts along the sides only of the reducer.

5.3.2 Install the motor base supports, using the longer bolts furnished with the motor base adapter. Two supports are used on each side unit of the 407 - 608 reducers. See Figure 5-3.

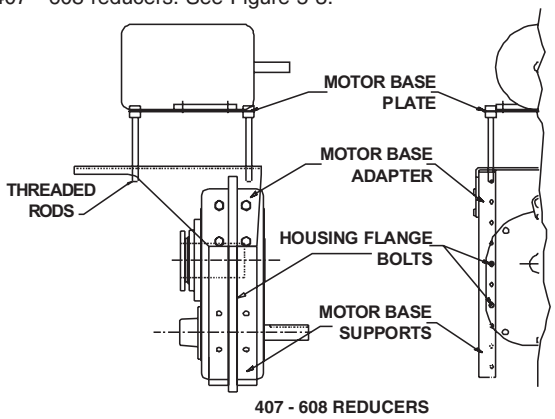

Figure 5-3

⚠WARNING Disconnect all power before adjusting units.

5.3.3 Install all flange bolts at this time but do not tighten.

5.3.4 Install the motor base adapter; using the capscrews provided, tightening the capscrews to the recommended torque. See Table No. 7.

5.3.5 After completing step 5.3.4, tighten the reducer flange bolts to the recommended torque. See Table No. 1.

5.4 Motor Plate Installation Instructions

5.4.1 Install a nut on each end of the four threaded rods and position nuts approximately 2" from each rod end. Refer to Figure 5-4 for correct installation of flange nuts.

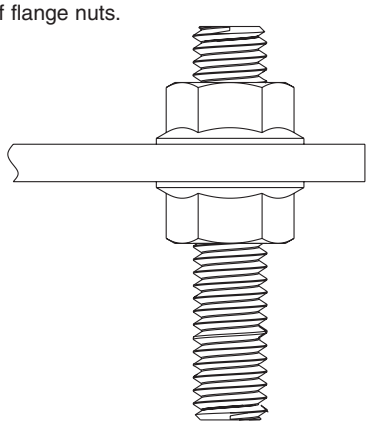

Figure 5-4
Detail of flanged nut installation on threaded rod.

5.4.2 Insert threaded rods in the four corner holes of the motor base adapter that match holes in motor base plate and install bottom nut flange end first on each rod but do not tighten.

5.4.3 Position motor base plate over threaded rods and install top nuts, flange end but do not tighten.

5.4.4 Mount motor using holes in motor base plate that match the holes in the base of the motor following motor manufacturer's recommendations.

5.4.5 Using adjusting nuts, lower motor to its lowest position. This can be done by either letting the threaded rods extend above the motor base plate or below the motor base adapter. Either way is acceptable, but nearly equal amounts of threads should be showing.

5.4.6 Mount and align sheaves on motor and input shaft of reducer.

Note: The sheave should be positioned as closely to the reducer housing as possible to reduce overhung load on the input bearings.

5.4.7 Adjust the belt alignment by sliding the motor base plate to the correct position. Mount and adjust belts to the recommended tension by raising the motor equally at all four adjusting rods to assure that the motor base plate remains parallel to the input shaft at the final adjustment. Tighten the flanged nuts to the recommended torque. See bolt torque specifications section.

5.4.8 Recheck to be sure all nuts and bolts are tight, sheaves are in alignment and belts are properly tensioned.

5.5 Hydraulic Motor Installation Instructions

5.5.1 Before installing the hydraulic motor, measure dimensions A , B, and spline length (SL) on the hydraulic motor.(See Figure 5.5-1).
Three conditions must be met:

Condition 1:
Dimension A on the motor must be less than the A1 as shown in Table 5.5-1.

⚠CAUTION **Failure to meet this condition will damage the hydraulic motor, the gearbox, or both.**

Condition 2:
Dimension B measured from the motor must be less B1 value shown in Table 5.5-1.

⚠CAUTION **Failure to meet this condition will damage the hydraulic motor, the gearbox, or both.** (**Important**: *Dimension B is to the location where the spline tooth is full depth see Figure 5.5-1*).

Condition 3:
Subtract spline length (SL) from motor dimension A. The result of this calculation must be greater than dimension B1 shown in Table 5.5-1.

⚠CAUTION **Failure to meet this condition reduces the length of spline engagement and will cause early spline failure.**

5.5.2 Pre-assemble the hydraulic motor to the gearbox and hand-tighten the bolts holding the motor. There must be **zero gap** between the motor flange and the gearbox flange.

⚠CAUTION **Failure to meet this condition will damage the hydraulic motor, the gearbox, or both.**

5.5.3 Lubricate the splined motor shaft with a non-fretting grease and install the motor bolts to the torque recommended by the motor manufacturer.

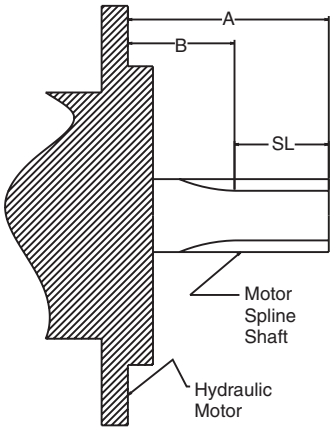

Figure 5.5-1

⚠WARNING **Disconnect all power before adjusting units.**

5.5-1 Hydraulic Motor Spine Length

Table 5.5-1

	6B		9T		13T		14T	
	A1	**B1**	**A1**	**B1**	**A1**	**B1**	**A1**	**B1**
107	2.38	0.78	1.89	0.58	-	-	-	-
115	2.36	0.76	1.87	0.56	2.15	0.90	-	-
203	2.37	0.68	1.98	0.73	2.12	0.87	2.92	1.15
207	2.41	0.72		-	2.16	0.91	2.91	1.14
215	2.39	0.64		-	2.10	0.85	2.94	1.05
307	2.43	0.68	-	-	-	-	2.98	1.09
315	2.50	0.75	-	-	-	-	3.05	1.16

5.6 C-Face Motor Installation Instructions

5.6.1 Gearboxes designed for C-Flange installations are supplied with an anti-fretting plastic liner insert. Do not use any lubrication on the shaft or this insert.

5.6.2 Install the plastic insert by aligning the keyway of the gearbox input shaft with the plastic insert keyway.

5.6.3 The plastic liner must be inserted into the input shaft until the flange on the liner is located in the groove in the input shaft.

5.6.4 Place the motor key in the motor shaft and assemble the motor to the gearbox by hand tightening the motor bolts. There must be **zero gap** between the motor flange and the gearbox flange.

⚠CAUTION **Failure to meet this condition will damage the electric motor, the gearbox, or both**

5.6.5 Tighten Mounting bolts to motor manufacturers torque specification.

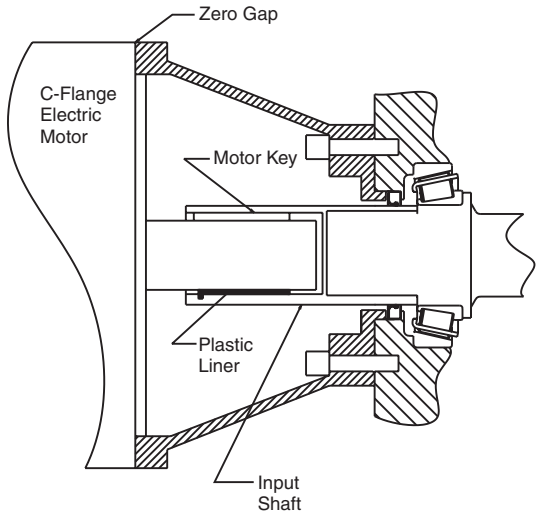

Figure 5.6-1

6. V-Belt Guard Installation

NOTE: Motor mount and motor must be installed before starting v-belt guard installation. See Section 5.

Shaft Mount Sizes 107SMTP through 315SMTP:

6.1 The mounting kit consists of: (Refer to Figure 6A)
Guard back (Qty 1)
Belt guard (Qty 1)
Lower mounting brackets (Qty 2) (each bracket is two pieces)
Fasteners (bolts, washers and nuts)

6.2 Assemble the two piece lower mounting brackets as shown in Figure 6A. Tighten the bolts hand tight.

6.3 Remove the two bolts from the reducer housing flange and install the lower mounting brackets using longer bolts supplied with the kit. Tighten finger tight.

6.4 (Optional - 307 and 315. Install the fan kit if a fan is used on this application.)

6.5 Attach the guard back to the motor base adapter and the lower mounting brackets using the bolts supplied with the kit. Tighten the bolts finger tight. (If a fan is installed, adjust the lower mounting brackets for 1/8 inch minimum clearance between the bolts in the fan cover and guard back.)

6.6 Tighten the bolts in the lower mounting brackets to the torque from Table 6.

6.7 Position the guard back such that the input shaft is centered in the input shaft cutout and the motor shaft is centered in the cutout provided for the motor shaft. Tighten all bolts to the torques shown in Table 6.

6.8 Mount the sheaves and belts. Align and adjust the tension per belt manufacturers instructions.

6.9 Inspect all rotating components (Input shaft, fan, belts, sheaves, etc.) to confirm adequate clearance. Make adjustments if required to provide clearance and retighten all fasteners.

6.10 Mount the belt guard front using bolts supplied with kit. Tighten all bolts to the torques shown in Table 6.

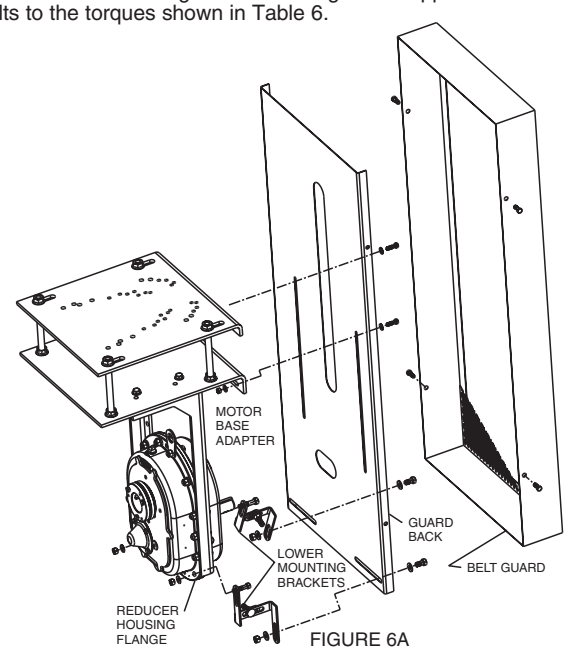

FIGURE 6A

⚠WARNING **Disconnect all power before adjusting units.**

Shaft Mount Sizes 407SMTP through 608SMTP:

6.11 The mounting kit consists of: (Refer to Figure 6B)
Guard back (Qty 1)
Belt guard (Qty 1)
Lower mounting bracket (Qty 1)
Upper mounting bracket (Qty 1)
Fasteners (bolts, washers and nuts)

6.12 Remove the upper bolt and nut from each side of the motor base adapter.

6.13 Assemble the upper mounting bracket to the motor mount using the fasteners provided. Do not tighten the fasteners at this time. Make sure the front of the bracket is parallel to the front of the reducer housing.

6.14 Remove the lower bolt, nut and washer from the reducer housing flange. Assemble the lower mounting bracket to the reducer using the same fasteners. Do not tighten at this time.

6.15 Mount the guard back to the upper and lower mounting bracket using the hardware provided. See Figure 6B to identify and properly locate the hardware. Position the guard back as close as possible to the front of the reducer housing or the fan housing, if so equipped, making sure it is parallel to the front of the reducer. Align the belt guard back so that the reducer input shaft is centered in the cutout and tighten the bracket fasteners to the torque values listed in Table 6.

6.16 Mount the sheaves and belts. Align and adjust tension per belt manufacturers instructions. (Refer to Section 5.3).

6.17 Inspect all rotating components (Input shaft, fan, belts, sheaves, etc.) to confirm adequate clearance. Make adjustments if required to provide clearance and retighten all fasteners.

6.18 Mount belt guard front using bolts supplied with kit. Tighten all bolts to torques shown in Table 6.

FASTENER TIGHTENING TORQUES
TABLE 6

FASTENER SIZE	TORQUE FT. LBS.
1/4	8
5/16	16
3/8	29
7/16	50
1/2	70
5/8	140
3/4	250

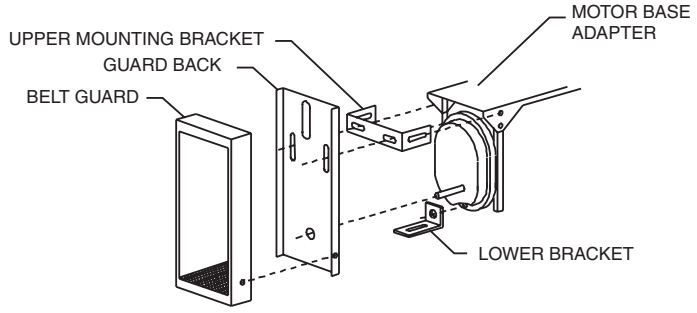

FIGURE 6B

7. Fan Kit Installation

Sizes 307 - 608 SMTP:

7.1.1 Attach the fan housing to the reducer with the capscrews provided. Reducers are furnished with tapped holes around the input shaft for this purpose.

7.1.2 Put the key in the keyway of the input shaft and slide the fan into position. Tighten the setscrew.

7.1.3 Attach the fan cover to the fan housing with the capscrews provided. See Figure 7-1.

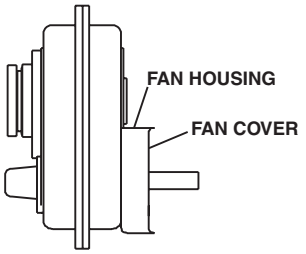

FIGURE 7-1

8. Backstop Kit Installation Instructions

⚠WARNING Gearboxes equipped with a backstop must be mounted in the 6 o'clock through 9 o'clock positions. (Shown in Figure 8-4.) Call Emerson Power Transmission Application Engineering for any other mounting position at 1-800-626-2093.

Do **not use** a backstop on a gearbox mounted with the **input shaft vertical down.**

If the motor is wired incorrectly and **started against the backstop**, correct the wiring and **replace** the backstop.

Petroleum based and synthetic lubricants, which contain **anti-wear extreme pressure additives**, must **not be used** in gearboxes with internal backstops. These additives decrease the backstop's ability to prevent reverse rotation **resulting in backstop failure.**

Do **not disassemble** the cam and outer race subassembly.

⚠WARNING Disconnect all power before adjusting units.

8.1 Installation (107SMTP through 307SMTP):

The 107BSP through 307BSP backstop kit contains the following:

1 – Cam assembly
2 – Inner race
3 – Key
4 – Snap ring
5 – Gaskets
6 – Outer race mounting bolts
7 – Backstop cover
8 – Outer race

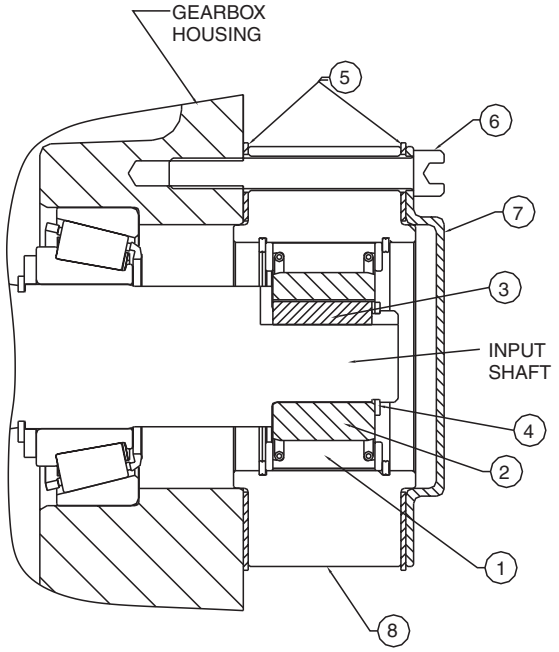

107SMTP through 307SMTP
Figure 8-1

8.1.1 Remove the capscrews from the input cover and remove the cover and gasket from the gearbox housing.

8.1.2 Clean the gearbox housing surface where the backstop outer race mounts.

8.1.3 Insert the key (Item 3) into the keyseat of the input shaft.

8.1.4 Install the inner race (Item 2) onto the input shaft as shown in Figure 8-1.

8.1.5 Install the snap ring (Item 4).

8.1.6 Determine the desired direction of rotation of the input shaft.

8.1.7 Install the gasket on the outer race.

8.1.8 Position the backstop outer race (Item 8) and cam assembly (Item 1) onto the inner race (Item 2), making sure the arrow on the label attached to the outer race is pointing in the desired direction of rotation of the input shaft.

8.1.9 Install the cover plate with capscrews supplied in the kit and tighten to the recommended value. (See bolt torque specifications Table 8-1.)

8.1.10 Rotate the input shaft by hand to confirm the correct direction of rotation.

8.2 Installation (315SMTP):

The 315BSP backstop kit contains the following:

1 – Cam assembly
2 – Inner race
3 – Key
4 – Snap ring
5 – Gaskets
6 – Outer race mounting bolts
7 – Backstop cover
8 – Outer race
9 – Adapter ring

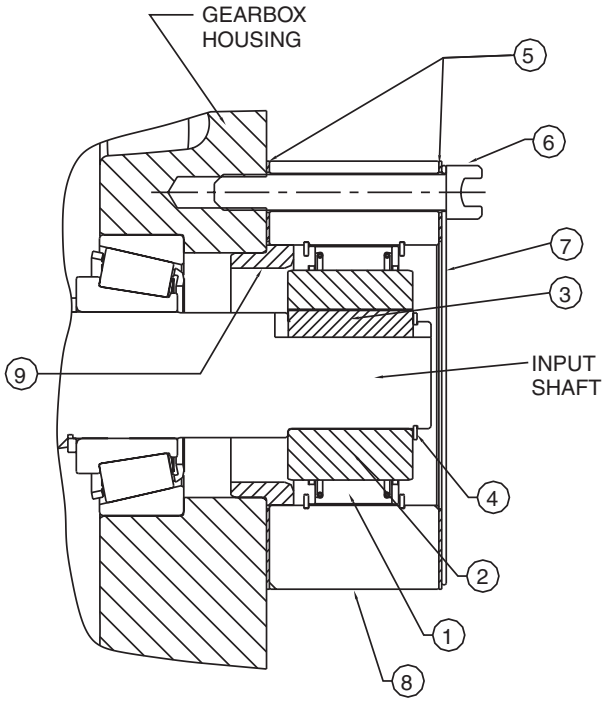

Figure 8-2

8.2.1 Remove the capscrews from the input cover and remove the cover and gasket from the gearbox housing.

8.2.2 Clean the gearbox housing surface where the backstop outer race mounts.

8.2.3 Insert the key (Item 3) into the keyseat of the input shaft.

8.2.4 Install the inner race (Item 2) onto the input shaft as shown in Figure 8-2.

8.2.5 Install the snap ring (Item 4).

8.2.6 Install the adapter ring (Item 9) as shown in Figure 8-2.

8.2.7 Determine the desired direction of rotation of the input shaft.

8.2.8 Install the gasket on the outer race.

8.2.9 Position the backstop outer race (Item 8) and cam assembly (Item 1) onto the inner race (Item 2), making sure the arrow on the label attached to the outer race is pointing in the desired direction of rotation of the input shaft.

8.2.10 Install the cover plate and second gasket with the capscrews supplied in the kit and tighten to the recommended value. (See bolt torque specifications Table 8-1.)

8.2.11 Rotate the input shaft by hand to confirm the correct direction of rotation.

⚠WARNING Disconnect all power before adjusting units.

8.3 Installation (407 through 608SMTP):

The 407BSP through 608BSP backstop kit contains the following:

1 – Cam assembly
2 – Inner race
3 – Key
4 – Snap ring
5 – Gaskets
6 – Outer race mounting bolts
7 – Backstop cover
8 – Outer race

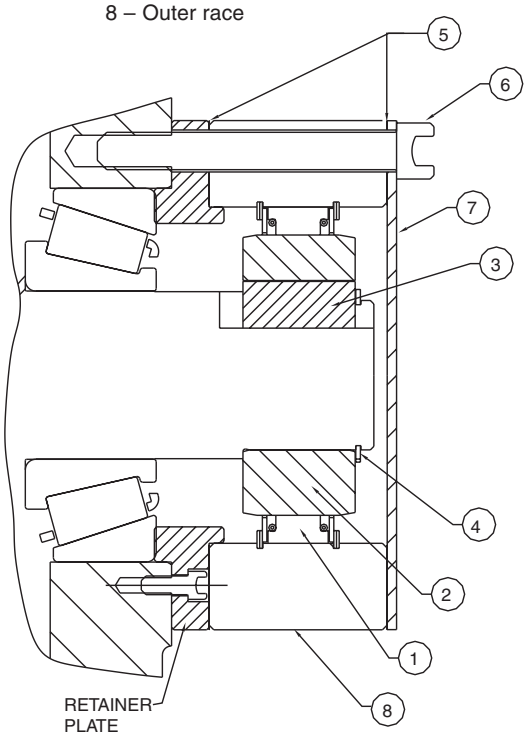

Figure 8-3

8.3.1 Remove the capscrews from the input cover and remove the cover and gasket from the gearbox housing. **(Do not remove retainer plate.)**

8.3.2 Clean the surface where the backstop outer race mounts.

8.3.3 Insert the key (Item 3) into the keyseat of the input shaft.

8.3.4 Install the inner race (Item 2) onto the input shaft as shown in Figure 3.

8.3.5 Install the snap ring (Item 4).

8.3.6 Determine the desired direction of rotation of the input shaft.

8.3.7 Install the gasket on the outer race.

8.3.8 Position the backstop outer race (Item 8) and cam assembly (Item 1) onto the inner race (Item 2), making sure the arrow on the label attached to the outer race is pointing in the desired direction of rotation of the input shaft.

8.3.9 Install the cover plate and second gasket with the capscrews supplied in the kit and tighten to the recommended value. (See bolt torque specifications Table 8-1.)

8.3.10 Rotate the input shaft by hand to confirm the correct direction of rotation.

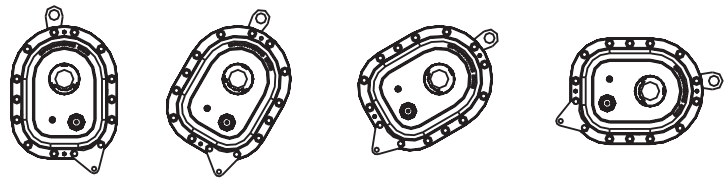

6 O'CLOCK 7 O'CLOCK 8 O'CLOCK 9 O'CLOCK

Figure 8-4

Backstop Bolt Torque Specifications
Table 8-1

SIZE	TORQUE (FT-LBS)
107	8
115	8
203	8
207	29
215	29
307	29
315	70
407	70
415	70
507	140
608	140

9. Pump and Cooler Installation Instructions

307SMTP through 608SMTP

Applications requiring cooling beyond the capability of a fan can use a pump and cooler as indicated in the selection tables. The following instructions are a step-by-step guide for installation of the pump and cooler kit available for the Browning TorqTaper Plus shaft mounted gearbox.

⚠WARNING Disconnect all power before adjusting units.

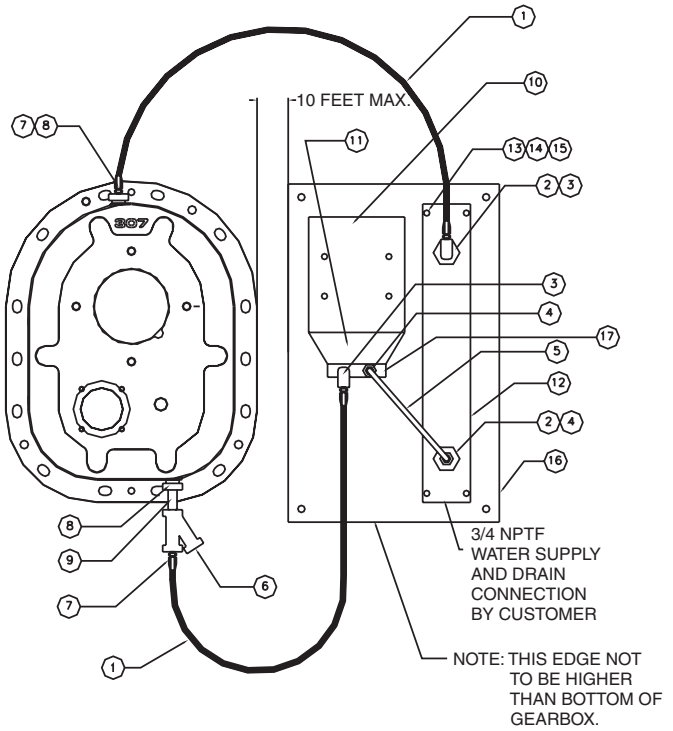

Figure 9

Note: Use of a pipe thread sealant can reduce the possibility of a leak.

The heat exchanger, pump and motor are factory installed on a 16" x 26" mounting plate (as shown).

9.1.1 Attach this subassembly to equipment with four 3/8" mounting bolts (customer supplied). The pattern of these mounting bolts is 14.00" x 23.63". The maximum distance between the reducer and the mounting plate is 10 feet. (Hoses are supplied by the customer.)
Note: The bottom edge of the mounting plate should not be mounted higher than the bottom of the gearbox.

9.1.2 Remove the bottom drain plug from the reducer and replace with 3/4" to 3/8" pipe reducer bushing (Item 8).

9.1.3 Install the 3 inch long pipe nipple (Item 9) into the reducer bushing.

9.1.4 Attach the strainer (Item 6) to the pipe nipple and turn the strainer to a position where the strainer screen can be removed for cleaning without interference with the gearbox.

9.1.5 Install the adapter (Item 7) in the bottom of the strainer.

9.1.6 Connect one hose between adapter (Item 7) and adapter (Item 3) at the inlet of the pump.

9.1.7 Install 3/4" to 3/8" pipe reducer bushing (Item 8) at the top of the gearbox, as shown.

9.1.8 Install adapter (Item 7) into the reducer bushing.

9.1.9 Connect the second hose between the adapter (Item 7) at the top of the gearbox and the adapter (Item 3) at the outlet of the heat exchanger.

9.1.10 Secure hoses so that there are no sharp bends that would restrict oil flow. Hoses must also be secured to prevent interference with moving machine components.

9.1.11A motor starter is required for the pump motor and must be connected such that the pump motor and the gearbox motor start at the same time. The motor furnished with this kit has the rating shown on the motor nameplate. The proper pump motor overload protection must be selected per local and national electrical codes. The wiring diagram for the pump motor is also shown on the motor nameplate.

9.1.12 Attach the water supply and drain lines to the bottom of the heat exchanger. Minimum water flow is 2.2 GPM and the maximum water flow is 13 GPM. Maximum inlet water temperature is 80°F.

9.1.13 Fill the gearbox with the oil type and amount per the "Lubrication Instructions." Additional oil is required for the hoses and heat exchanger. Check and fill to the oil level, as described in the instructions supplied with the gearbox.

9.1.14 Start the water flow.

9.1.15 Start the pump motor and confirm that the oil is circulating correctly. If no oil flows within 20 seconds, stop the pump motor and contact Emerson Power Transmission Application Engineering at 1-800-626-2093.

9.1.16 Inspect for oil or water leaks.

9.1.17 After the gearbox has operated for five minutes, refill with oil to the correct level.

9.1.18 Adjust the water flow for an oil temperature of 110 to 170° F.

307 through 608 SMTP

Item Number	Quantity	Description
1	2	Hose assembly - Customer supplied
2	2	1 in x 1/2 in reducer bushing
3	2	Male elbow adapter - 1/2 NPT to 9/16 JIC
4	2	Male connector 1/2 NPT to 3/8 tube
5	1	3/8 in DOM hyraulic tubing
6	1	Strainer
7	2	Male adapter - 3/8 NPT to 9/16 JIC
8	2	Reducer bushing - 3/4 NPT to 3/8 NPT
9	1	3/8 NPT x 3 in pipe nipple
10	1	1/2 HP 1800 RPM 3PH 230/460 AC motor
11	1	Oil pump bracket
12	1	Shell and tube heat exchanger
13	8	Hexagon head cap screws 3/8-16 x 1 inch
14	8	3/8 Split lockwasher
15	8	3/8-16 Hex nut
16	1	Mounting plate (bolt hole pattern 14.00 x 23.63)
17	1	Pump

⚠WARNING Disconnect all power before adjusting units.

10. Installation Checklist

✓ Make sure the input shaft rotates properly prior to starting drive.
✓ Never use oils of the EP (extreme pressure) type or those which contain slippery additives, if an internal backstop has been installed.
✓ Make sure the reducer is filled with correct lubricant and quantity.
✓ Make sure all drive guards are in place.
✓ Breather location
✓ Torque arm or anti-rotation device

11. Shaft Mount Removal Instructions

Support the reducer by lifting lug. (Lifting lug should only be used to lift the weight of the reducer. Do not use the lifting lug to lift the attached assemblies to avoid overloading the lifting lug.) Disconnect the motor drive.

Note: TorqTaper seals are grease-packed at assembly. Some purging of grease from around the rotating flingers during initial hours of operation is normal and should be expected.

11.1 Taper Bushing Model

11.1.1 Loosen the setscrew in the endcap. Remove the endcap from the output quill.

11.1.2 Remove the capscrews from the bushing and install them in the tapped holes in the bushing flange.

11.1.3 Tighten the capscrews uniformly until the reducer releases from the bushing taper.

11.1.4 Remove the reducer from the shaft.

Note: A slight rocking movement may be required to release the unit from the stablilizer ring, if used.

11.2 Screw Conveyor Drive Model

11.2.1 Remove the bolts that attach the reducer to the screw conveyor adapter.

11.2.2 Remove the keeper plate bolt. Remove the capscrews from the keeper plate.

11.2.3 Reinstall and tighten the keeper plate bolt into the tapped hole in the tapered drive shaft.

11.2.4 Install the three capscrews through the keeper plate and into the bushing ring as shown on Figure 11-1.

11.2.5 Tighten all capscrews evenly around the keeper plate until the reducer releases from the tapered drive shaft.

11.2.6 Remove the reducer from the shaft.

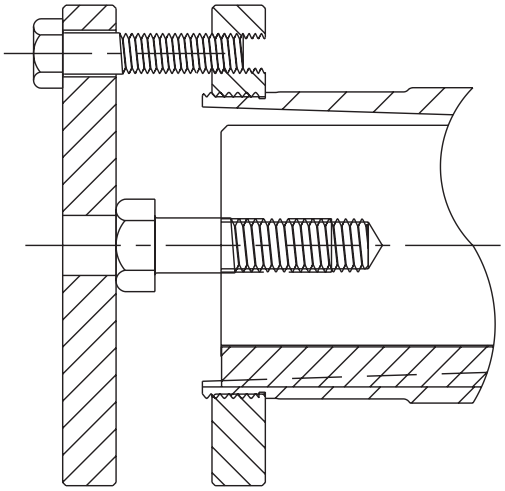

Figure 11-1

Note: TorqTaper seals are grease-packed at assembly. Some purging of grease from around the rotating flingers during initial hours of operation is normal and should be expected.

12. Bolt Torque Specifications

SMT SIZE	HOUSING FLANGE GRADE 5		TORQTAPER BUSHING		ENDCAP SETSCREW NYLON TIPPED	
	BOLT SIZE	FT. LBS.	BOLT SIZE	FT. LBS.	SETSCREW SIZE	IN-LBS.
107	5/16-18	16	5/16-18	16	1/4-20	60
115	3/8-16	25	3/8-16	29	1/4-20	60
203	7/16-14	40	3/8-18	29	1/4-20	60
207	1/2-13	65	3/8-16	29	1/4-20	60
215	1/2-13	65	3/8-16	29	1/4-20	60
307	5/8-11	125	1/2-13	70	1/4-20	60
315	5/8-11	125	1/2-13	70	1/4-20	60
407	5/8-11	125	1/2-13	70	-	-
415	3/4-10	220	5/8-11	140	-	-
507	3/4-10	220	3/4-10	250	-	-
608	3/4-10	220	3/4-10	250	-	-

UNIT SIZE	SCREW CONVEYOR ADAPTER GRADE 8		KEEPER PLATE RETAINER (SCREW CONVEYOR SHAFT) GRADE 8		INPUT COVER GRADE 5		BACKSTOP GRADE 8	
	BOLT SIZE	FT-LBS	BOLT SIZE	FT-LBS	BOLT SIZE	FT-LBS	BOLT SIZE	FT-LBS
107	5/16-18	23	1/2-13	99	1/4-20	8	1/4-20	8
115	3/8-16	41	5/8-11	200	1/4-20	8	1/4-20	8
203	7/16-14	65	5/8-11	200	5/16-18	16	1/4-20	8
207	1/2-13	99	3/4-10	350	3/8-16	29	3/8-16	29
215	1/2-13	99	3/4-10	350	3/8-16	29	3/8-16	29
307	5/8-11	200	1-8	600	3/8-16	29	3/8-16	29
315	5/8-11	200	1-8	600	1/2-13	70	1/2-13	70
407	5/8-11	200	1-8	600	1/2-13	70	1/2-13	70
415	-	-	-	-	1/2-13	70	1/2-13	70
507	-	-	-	-	5/8-11	140	5/8-11	140
608	-	-	-	-	5/8-11	140	5/8-11	140

⚠WARNING Disconnect all power before adjusting units.

13. Shaft Mount Terminology

TERMS	DEFINITION
Backstop	A device that is used to prevent reverse rotation up to a specified torque limit and rotational speed. Also known as a clutch.
Bushing	A component that is used to adapt the shaft mounted reducer to various driven shaft sizes.
Bushing ring	A ring mounted on the output quill that is used to attach the bushing to the shaft mounted reducer.
Endcap	A ring mounted on the output quill that retains the stabilizer ring or dirt cover.
Inner race	The inside part of the backstop that fits over the input shaft extension.
Overhung load	An external load applied to a shaft. Overhung loads are usually a result of torsional loads, but other loads such as component weights can contribute to the total amount of overhung load.
Packing gland	A material similar to rope that is commonly used in screw conveyor applications as a sealing device.
Quill	A shaft with a bore that extends from end to end. A hollow shaft.
Screw conveyor	A material transporting device typically designed with a screw-like shaft that rotates inside a fixed trough or tube.
Seal	A metal shell with a lip that is used to help retain oil and help keep dirt and debris from entering the shaft mount reducer.
Sheave	Drive component typically mounted on the input shaft and used with a v-belt to transmit power from a motor to the shaft mount reducer. Also known as a pulley.
Snap ring	Metal ring used to hold accessories, like the backstop inner race, in a certain location. Also known as a retaining ring.
Stabilizer ring	A ring that is placed in the quill on the opposite side of the bushing to provide two mounting points for the shaft mount reducer.
Taconite	An iron ore dust created in the processing of iron.
Thrust	Internal or external force applied along the centerline axis of a shaft.
Torque arm	A device used to counteract the torsional loads created by the shaft mount reducer.
V-ring	A sealing device that mounts on a shaft and seals against a counterface. Also known as a v-seal or flinger.
Waste pack	A material similar to wool fibers that is commonly used in screw conveyor applications as a sealing device.

⚠WARNING Disconnect all power before adjusting units.

Emerson Power Transmission
413 Center Street
P.O. Box 687
Maysville, Kentucky 41056
www.emerson-ept.com