FRAME: 256T	HP:	RPM:	PHASE: 3	VOLT: 208 - 230/460V	ENCL: TEFC	FREQ: 60 Hz	FLA:	LRA:

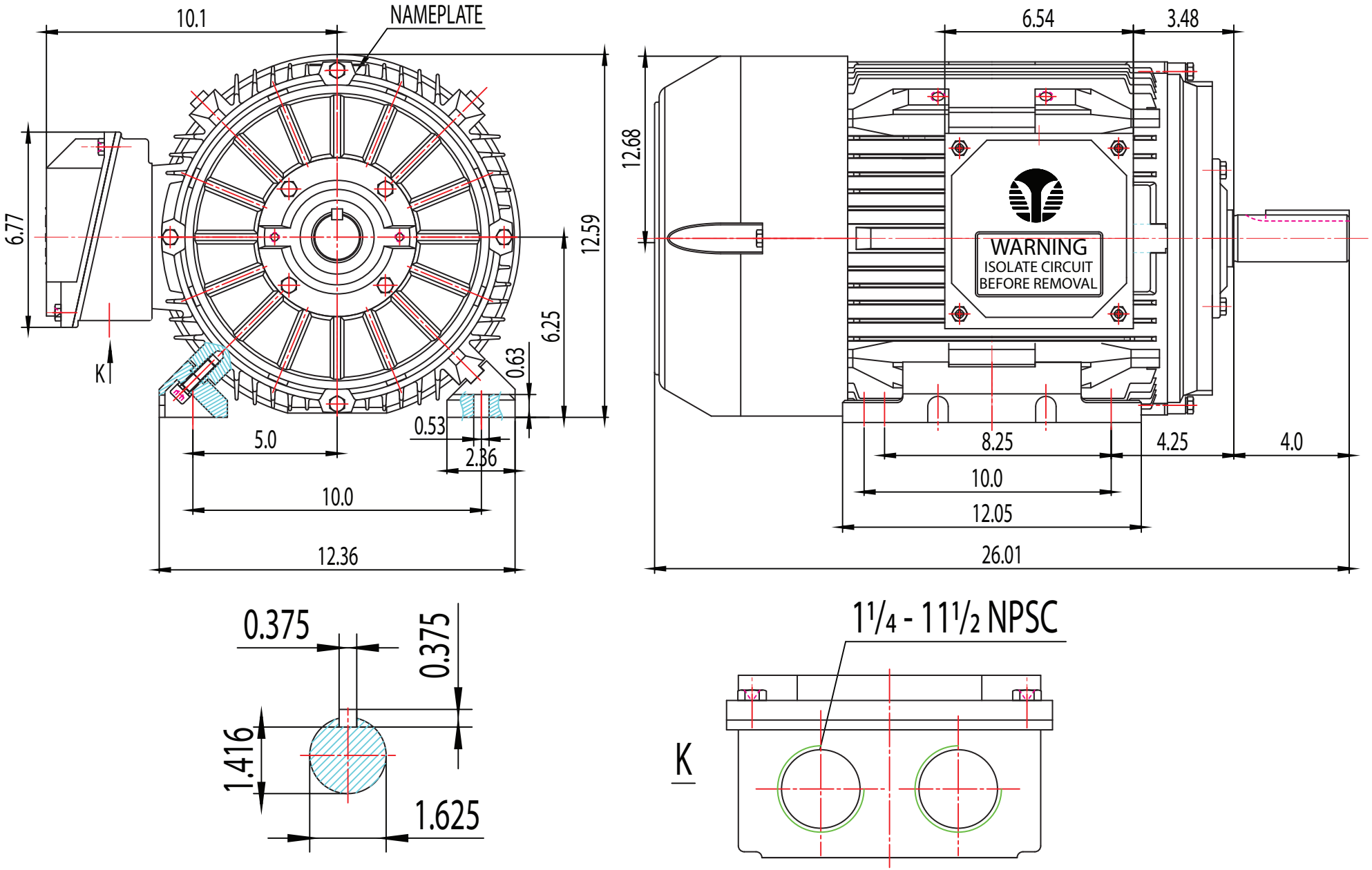

TECHTOP	MODEL NUMBER:	REV.	BY	DATE	CHANGES
	GR3-CI-TF-256T	1			
		2			
	MFG PN:	3			
MATERIAL:		4			
UNITS: INCH BY: SSEE		5			
DRAWN: 6/26/2018		6			
WWW.TECHTOP.COM		7			