PRODUCT INFORMATION PACKET

Model No: M1135046.00
Catalog No: M1135046.00
Right Angle Gearmotor, 0.25 HP, 90 V, 500 RPM, 34 Frame, TENV

Regal and LEESON are trademarks of Regal Rexnord Corporation or one of its affiliated companies.
©2025 Regal Rexnord Corporation, All Rights Reserved. MC017097E

Nameplate Specifications

Output HP	**0.25 Hp**	Output KW	**0.19 kW**
Voltage	**90 V**	Speed	**500 rpm**
Service Factor	**1.0**	Frame	**34**
Enclosure	**Totally Enclosed Non Ventilated**	Thermal Protection	**No Protection**
Efficiency	**61.1 %**	Ambient Temperature	**40 °C**
Current	**2.3 A**	Duty	**Continuous**
Insulation Class	**H**	Drive End Bearing Size	**6201**
Opp Drive End Bearing Size	**6201**	UL	**Recognized**
CSA	**Y**	CE	**Y**

Technical Specifications

Rotation	**Reversible**	Mounting	**Special**
Shaft Type	**Right Angle**	Overall Length	**12.64 in**
Frame Length	**5.81 in**	Shaft Diameter	**0.625 in**
Shaft Extension	**1.8 in**	Torque	**30 LB-IN**
Outline Drawing	**M1030350-M1135046**	Connection Drawing	**M100512401**

This is an uncontrolled document once printed or downloaded and is subject to change without notice. Date Created:04/08/2025

Uncontrolled Copy

M1030350

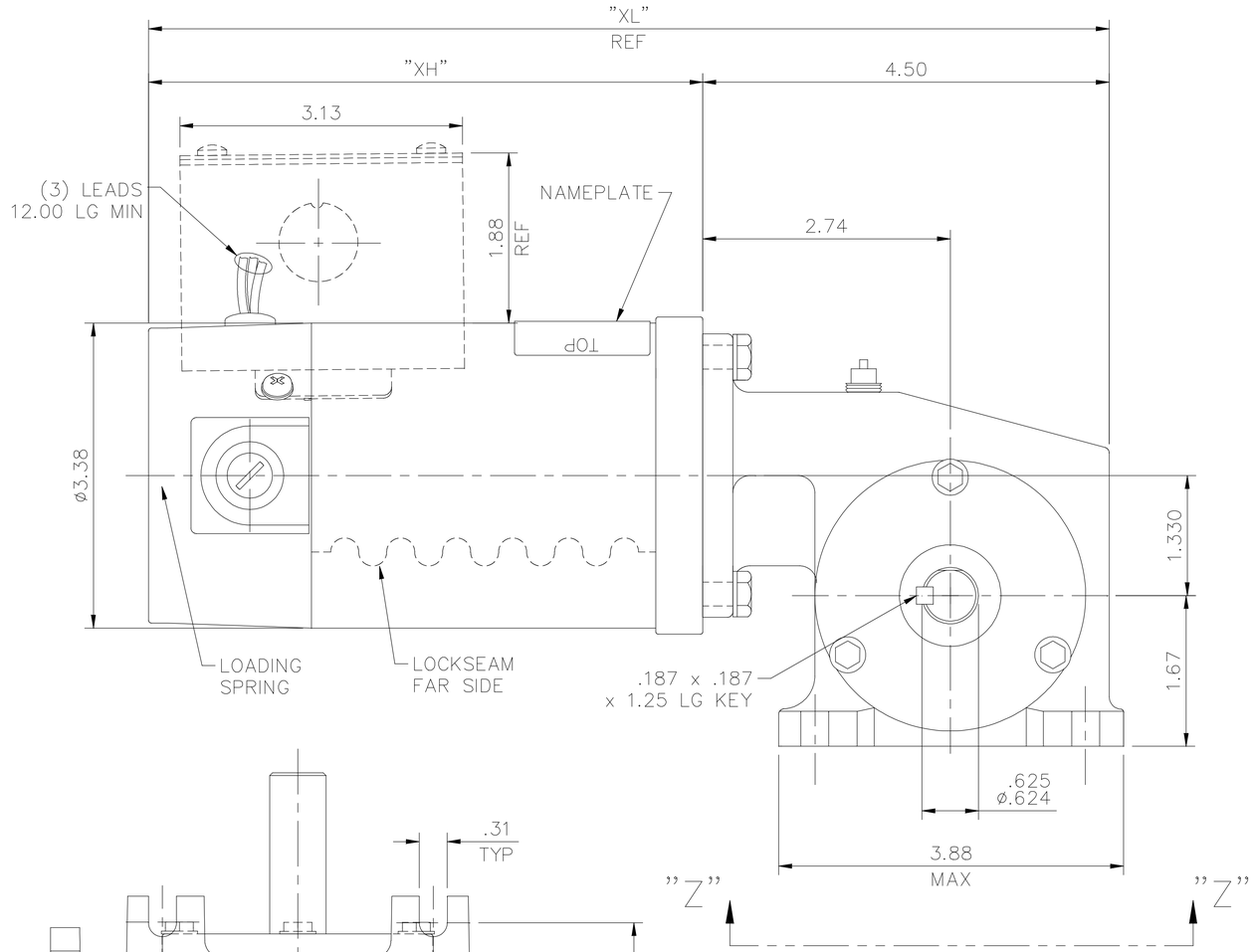

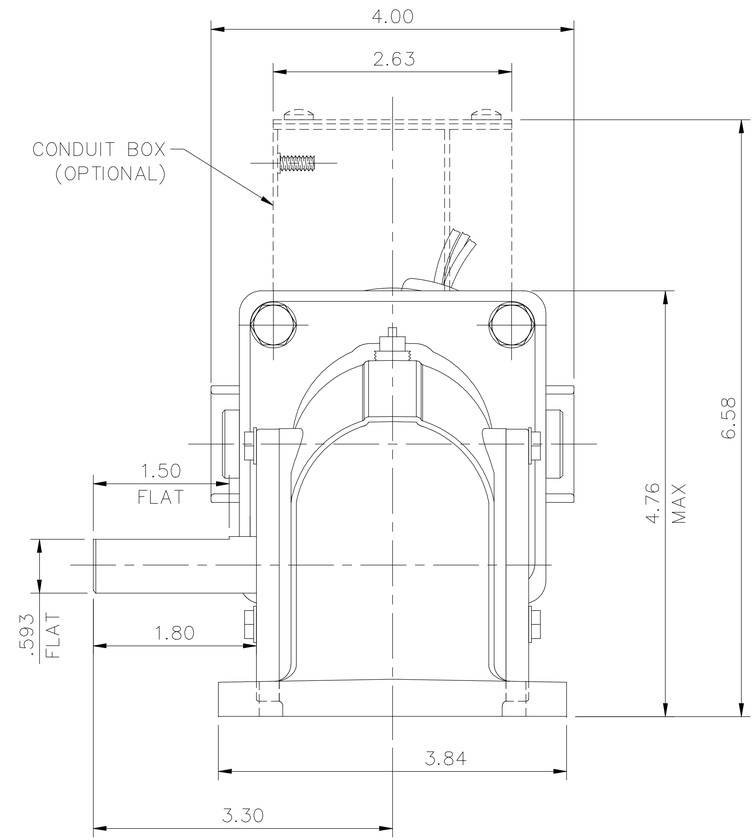

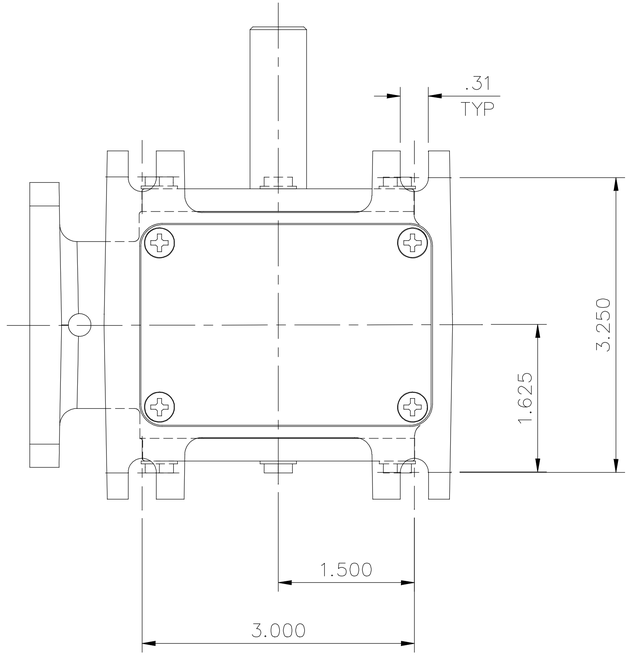

VIEW Z–Z

CATALOG NUMBER	SPEED RANGE RPM	FULL LOAD TORQUE LB.–IN.	INPUT HP	OVERHUNG LOAD LBS.	GEARMOTOR TYPE & FRAME	RATIO TO 1	"XH"	"XL"
M1135046.00	500–8	30	1/4	235	13F05–34G	5	8.14	12.64
M1135045.00	250–4	50	1/4	235	13F10–34G	10	8.14	12.64
M1135044.00	125–2.1	90	1/4	235	13F20–34G	20	8.14	12.64
M1135043.00	83–1.4	125	1/4	235	13F30–34G	30	8.14	12.64
M1135042.00	62–1	135	1/4	235	13F40–34G	40	8.14	12.64

NO.	REVISION	BY & DATE
Y	REMOVED 1/8 HP RATINGS FROM TABLE, ECO–0173505	IPG 9/13/19

TOLERANCES UNLESS SPECIFIED

DEC.	INCHES
.X	±.1
.XX	±.03
.XXX	±.005
.XXXX	±.0005
CHK ANG	±1/2°

LEESON — ELECTRIC MOTORS GEARMOTORS AND DRIVES

TITLE: OUTLINE 34 FRAME DC 13 SERIES 90V GEARMOTOR

MAT'L.

FINISH: LEESON

CAD FILE: M1030350

RFP

DIST

DRAWN DWF 11/30/93

CHK

APPD

SCALE 5=8

REF M1135049.99

FMF M1135046.00

PREV

SIZE: B

DRAWING NO.: M1030350

REV.: Y

THIS DRAWING IN DESIGN AND DETAIL IS OUR PROPERTY AND MUST NOT BE USED EXCEPT IN CONNECTION WITH OUR WORK ALL RIGHTS OF DESIGN AND INVENTION ARE RESERVED
THIS IS AN ELECTRONICALLY GENERATED DOCUMENT – DO NOT SCALE THIS PRINT

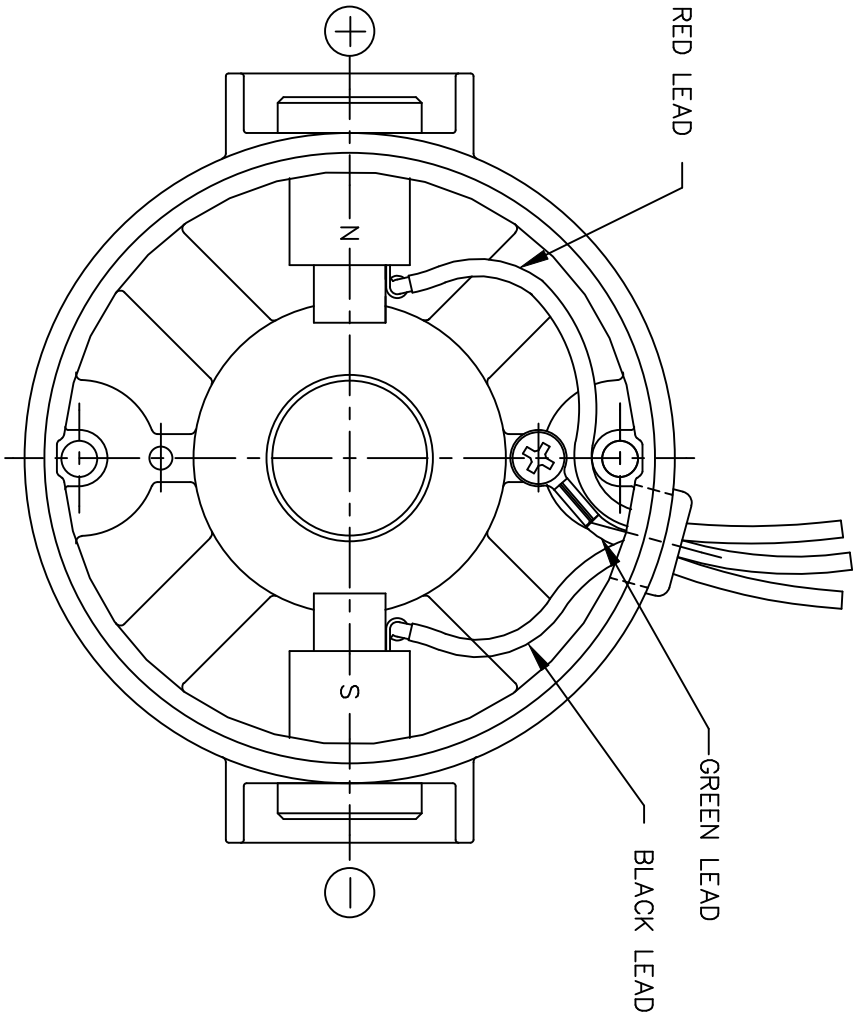

D.C. MOTORS

EXTERNAL CONNECTIONS FOR CW ROTATION
VIEWING LEAD END OF MOTOR WITH RED LEAD
POSITIVE AND BLACK LEAD NEGATIVE (–)
FOR CCW ROTATION REVERSE POLARITY

NO.	REVISION	BY & DATE		CHK
07	CORRECTED "N" & "S", ECR 80000 (PER BC)	VS	8/14/02	BC
06	REMOVED GROUND HOLE	TMZ	3/16/95	
05	REVERSE ROTATION WAS CW	SPV	6/3/94	
04	CHANGED ROTATION FROM CCW TO CW	MJS	3/9/93	
03	REVISED ROTATION NOTE	DWF	1/6/93	
02	ADDED GREEN LEAD	DWF	8/1/92	

TOLERANCES UNLESS SPECIFIED	
DEC.	INCHES
.X	±.1
.XX	±.01
.XXX	±.005
.XXXX	±.0005
ANG	±1/2°

LEESON

ELECTRIC MOTORS
GEARMOTORS
AND DRIVES

TITLE CONNECTION DIAGRAM

MAT'L.

FINISH

CAD FILE M100512401

RFP

DIST

DRAWN	SPV 12/10/91
CHK	DWF 5/20/92
APPD	
SCALE	1=1
REF	
FMF	M9131D2N22
PREV	

SIZE A

DRAWING NO. M1005124.01

REV. 07

THIS DRAWING IN DESIGN AND DETAIL IS OUR PROPERTY AND MUST NOT BE USED EXCEPT IN CONNECTION WITH OUR WORK ALL RIGHTS OF DESIGN AND INVENTION ARE RESERVED
THIS IS AN ELECTRONICALLY GENERATED DOCUMENT – DO NOT SCALE THIS PRINT

LEESON ELECTRIC CORPORATION

TYPICAL PERFORMANCE CURVE
FOR
DIRECT CURRENT PERMANENT MAGNET MOTOR

Model No. CM34D25NZ14 **Catalog No.** M1135046.00

HP	0.250	**RPM**	500	**DC Volts**	90.0	**N.P. FLA**	2.30
F.F.	1.38	**Encl**	TENV	**Type**	DN	**S.F.**	1.00
Max. Amb.	40.0 Deg C	**Insul.**	H	**Frame**	34	**Duty**	CONT

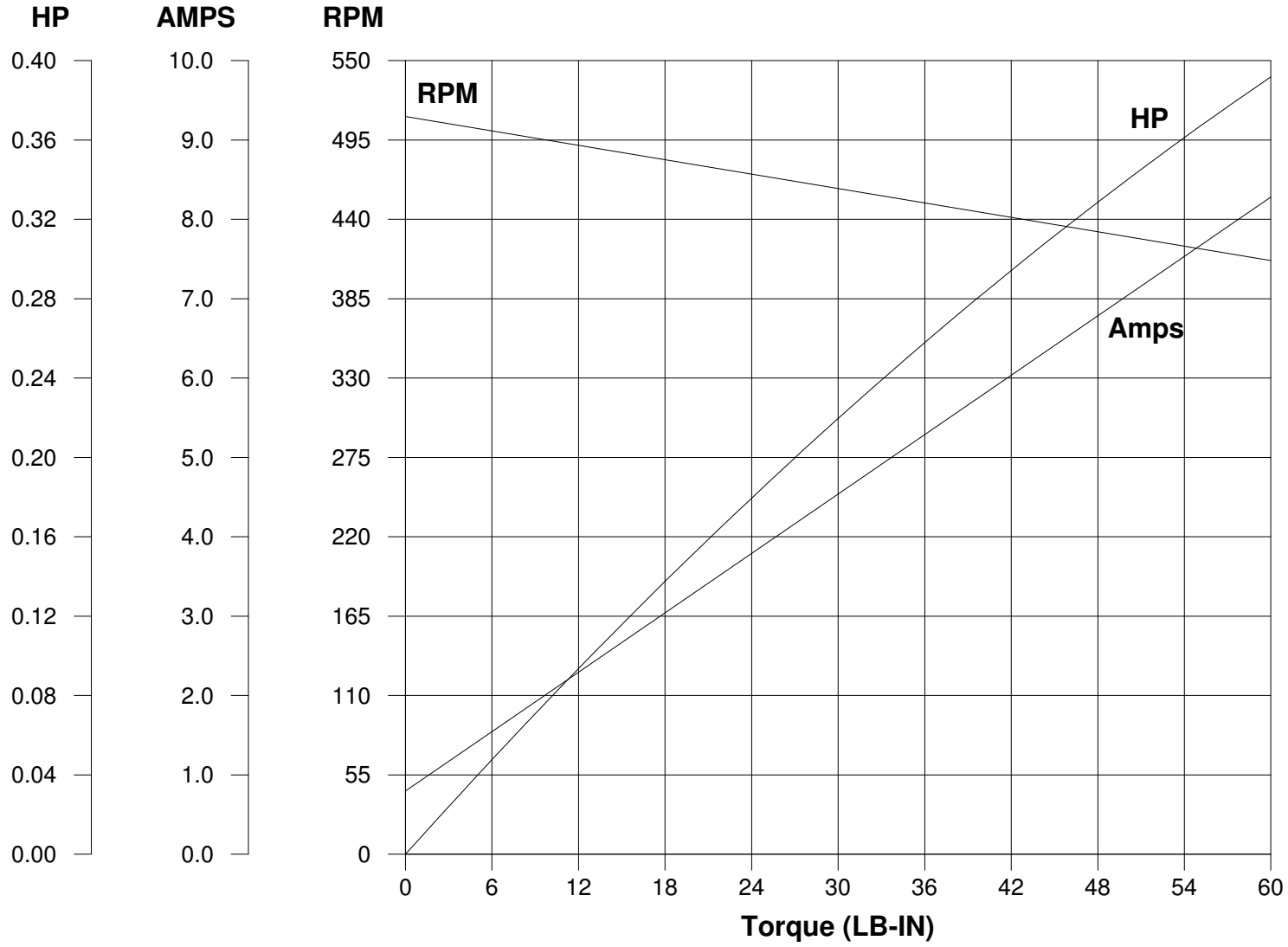

Ra	2.0900	Ohms	**Kt**	2.916	LB-IN/AMP
La	9.984	mHenrys	**Imax**	38.3	AMPS Allowed
Ja	0.6440	LB-IN^2	**FL Torque**	30.00	LB-IN
Ke	34.50	V/KRPM	**FL EFF**	40.10	%

Winding W- MD342145-1 **Prepared by** V. Boehlen **Date** 12-07-2005

Brush H21