39LYT044

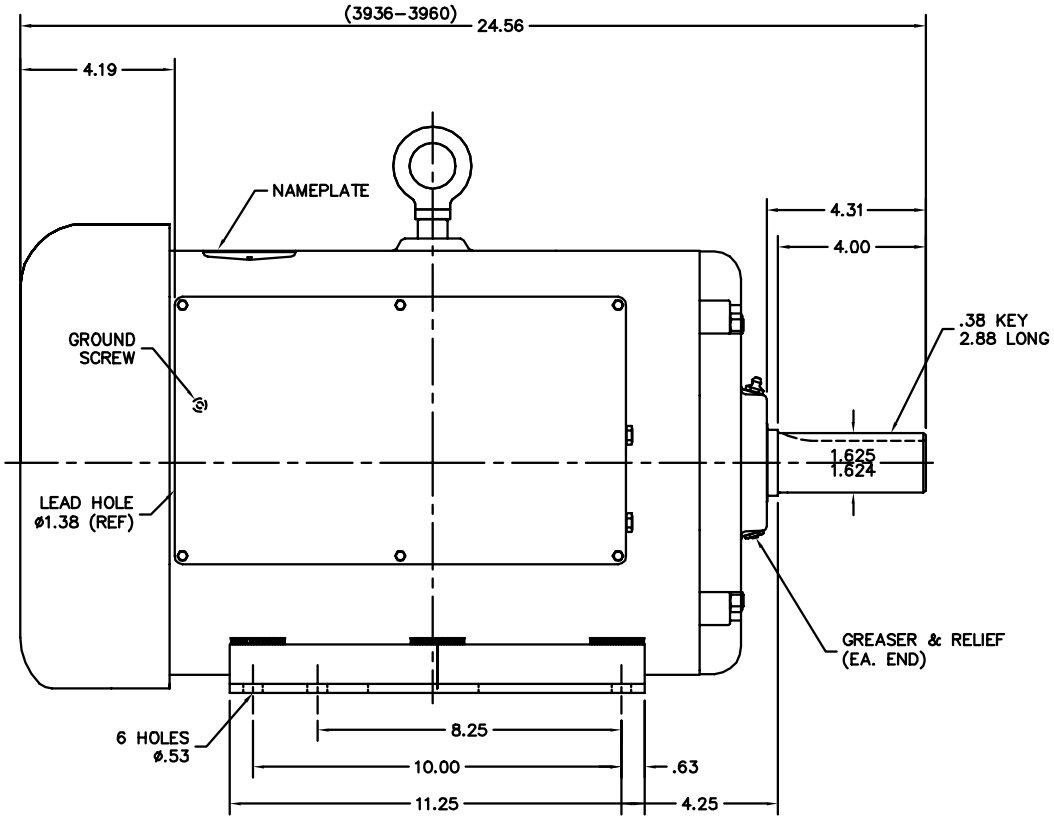

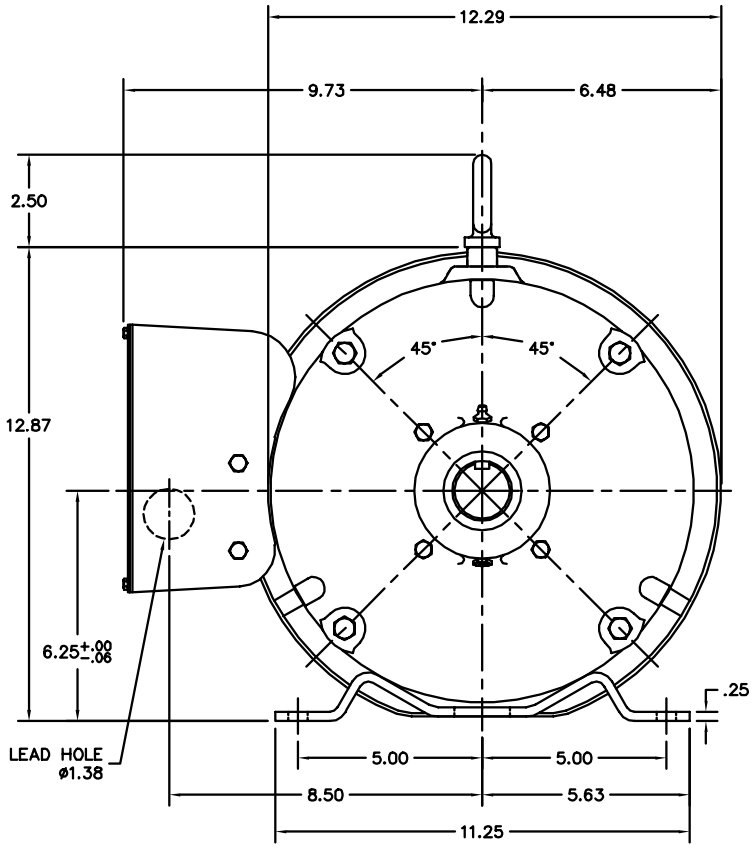

39LYT044

CUSTOMER IS RESPONSIBLE FOR DETERMINING THAT BALDOR'S PRODUCT WILL PERFORM SUITABLY IN THE INTENDED APPLICATION.

REV. DESC: ADDED MISSING DIMENSION			BALDOR
REV. LTR: D	VERSION: 04	TDR: 000000858528	
FILE: \AAA\00116\971	REVISED: 02:15:41 06/17/2014	BY: ENNINDO	HOR TEFC 254–6T LC W/ROTATING SWITCH
MTL: –			SH 1 of 1