PRODUCT INFORMATION PACKET

Model No: 116759.00
Catalog No: 116759.00
WATTSAVER® General Purpose Motor, 1.50 & 1.50 HP, 3 Ph, 60 & 50 Hz, 230/460 & 190/380 V, 1800 & 1500 RPM, 56 Frame, TEFC

Regal and Leeson are trademarks of Regal Rexnord Corporation or one of its affiliated companies.
Â©2023 Regal Rexnord Corporation, All Rights Reserved. MC017097E

Nameplate Specifications

Phase	3	Output HP	1.50 & 1.50 Hp
Output KW	1.1 & 1.1 kW	Voltage	230/460 & 190/380 V
Speed	1750 & 1450 rpm	Service Factor	1.25 & 1.25
Frame	56	Enclosure	Totally Enclosed Fan Cooled
Thermal Protection	Thermostat	Efficiency	86.5 & 86.5 %
Ambient Temperature	40 °C	Frequency	60 & 50 Hz
Current	4.8/2.4 & 5/2.5 A	Power Factor	67.7
Duty	Continuous	Insulation Class	F
Design Code	B	KVA Code	L
Drive End Bearing Size	6203	Opp Drive End Bearing Size	6203
UL	Recognized	CSA	Y
CE	Y	IP Code	43
Number of Speeds	1		

Technical Specifications

Electrical Type	Squirrel Cage Induction Run	Starting Method	Across The Line
Poles	4	Rotation	Reversible
Resistance Main	9.12 Ohms	Mounting	Rigid Base
Motor Orientation	Horizontal	Drive End Bearing	Ball
Opp Drive End Bearing	Ball	Frame Material	Rolled Steel
Shaft Type	NEMA 56	Overall Length	12.98 in
Frame Length	7.50 in	Shaft Diameter	0.625 in
Shaft Extension	1.88 in	Assembly/Box Mounting	F1 ONLY
Outline Drawing	028781-750	Connection Drawing	005010.20

This is an uncontrolled document once printed or downloaded and is subject to change without notice. Date Created:06/21/2023

Uncontrolled Copy

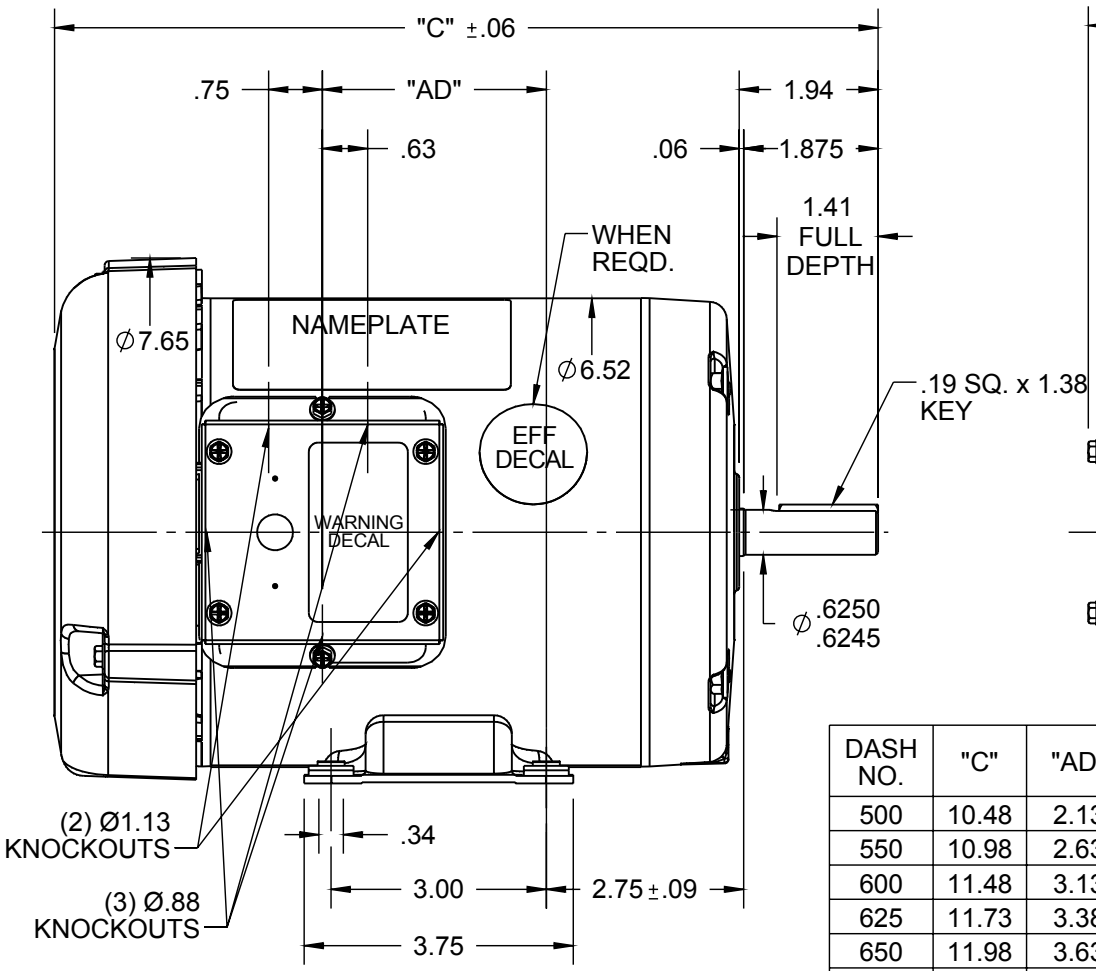

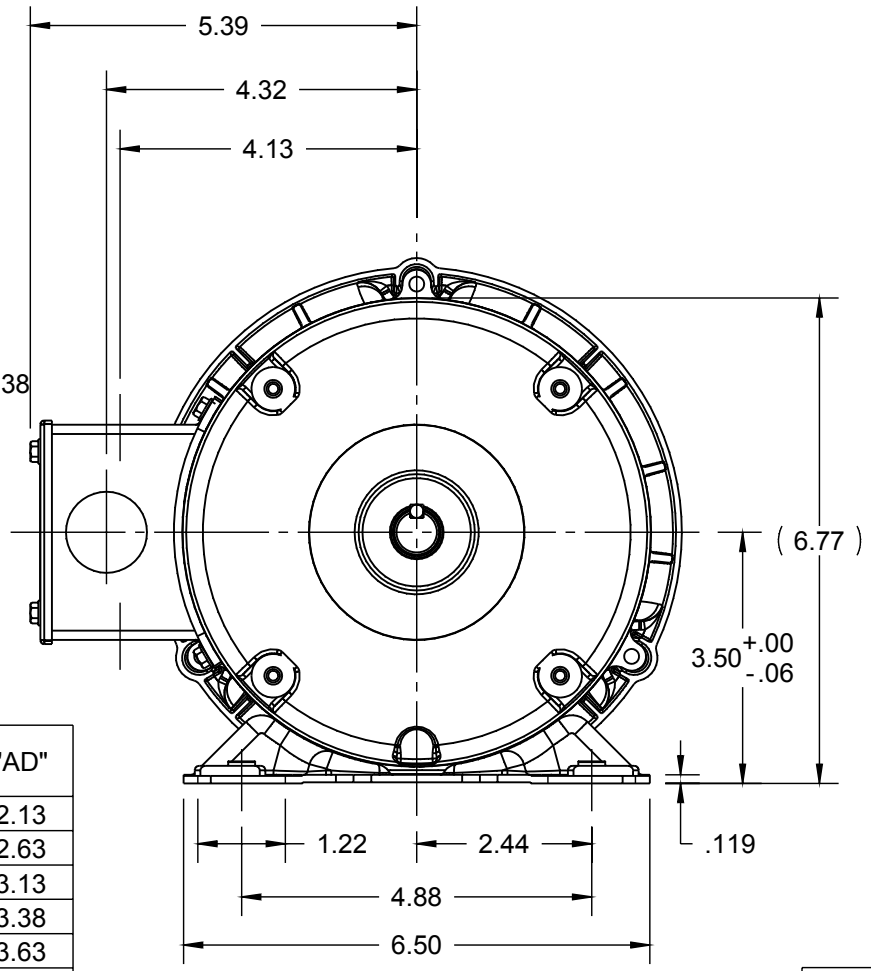

DASH NO.	"C"	"AD"
500	10.48	2.13
550	10.98	2.63
600	11.48	3.13
625	11.73	3.38
650	11.98	3.63
675	12.23	3.88
700	12.48	4.13
750	12.98	4.63

NOTES:
1) GASKETS THROUGHOUT

ORACLE REV
003

DRAWING REVISION	REVISION BY	DATE
E	LK	11/24/2015
ECO: ECO-0089388	APPROVED BY: GRB	DATE: 11/24/2015

ECO DESCRIPTION: ADDED DASH #675 PER NMR-0089703

COPYRIGHT REGAL BELOIT AMERICA, INC. ALL RIGHTS RESERVED.
PROPRIETARY AND CONFIDENTIAL INFORMATION - THIS DOCUMENT IS THE PROPERTY OF REGAL BELOIT AMERICA, INC. ("OWNER") AND CONTAINS OWNER'S PROPRIETARY INFORMATION. ANY PERSON, CORPORATION OR OTHER FIRM RECEIVING IT IS DEEMED, BY RECEIVING IT, TO AGREE THAT IT, AND/OR ANY PART OF IT, SHALL NOT BE DISCLOSED TO ANY PERSON, CORPORATION OR OTHER ENTITY, DUPLICATED, AND/OR USED, EXCEPT AS EXPRESSLY APPROVED IN WRITING IN ADVANCE BY OWNER. THIS DOCUMENT SHALL BE RETURNED TO OWNER UPON REQUEST. IT MAY BE SUBJECT TO CERTAIN RESTRICTIONS UNDER APPLICABLE EXPORT CONTROL LAWS AND REGULATIONS.

TOLERANCES UNLESS OTHERWISE SPECIFIED:

DEC.	INCH	mm	ANGLE
.X	±0.1	[±2.5]	±0.5°
.XX	±0.03	[±0.76]	
.XXX	±0.005	[±0.127]	
.XXXX	±0.0005	[±0.0127]	

REMOVE BURRS & BREAK SHARP EDGES: .003/.015 [.076/.381] X 45°
CORNER FILLETS: R.02 [.51]
MACHINED SURFACES: 125 INCH / 3.2 mm
mm SHOWN IN [BRACKETS]

DRAWN BY	KMM
DATE	08/10/07
APPROVED BY	
DATE	
REFERENCE	600053
THIRD ANGLE PROJECTION	

Regal Beloit America, Inc.

DESCRIPTION: OUTLINE
56 FRAME TEFC - RIGID

MATERIAL	PROCESS/FINISH
	GENERAL PURPOSE

SIZE	DRAWING NUMBER	SHEET
A	028781	1 OF 1

VIEW FROM OUTSIDE OF MOTOR AT SWITCH END.

Uncontrolled Copy

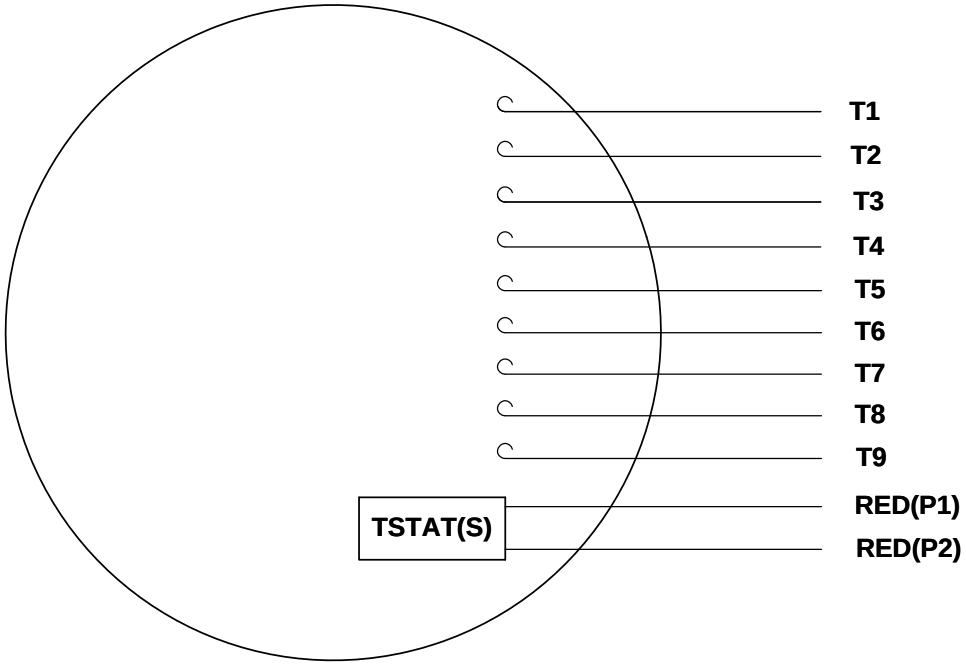

LINE LEADS

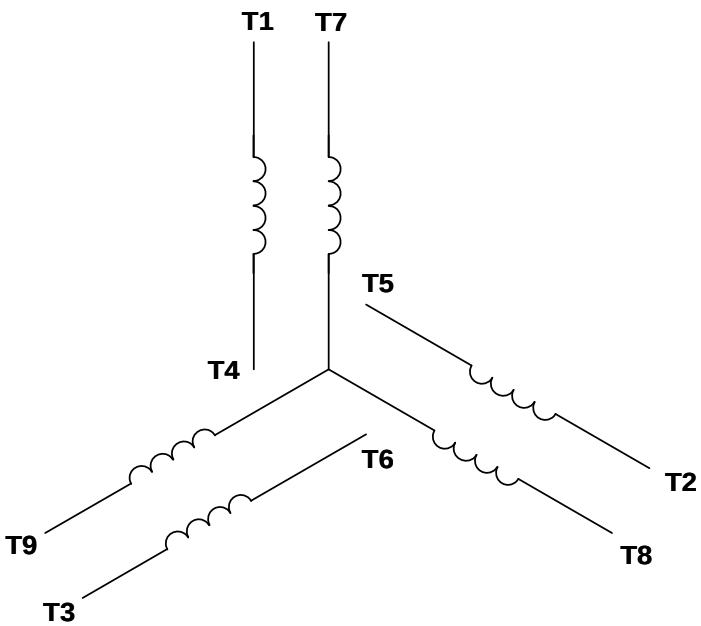

VOLTAGE	L1	L2	L3	JOIN & INSULATE
HIGH	T1	T2	T3	(T4,T7) (T5,T8) (T6,T9)
LOW	T1,T7	T2,T8	T3,T9	T4,T5,T6

DRAWING REVISION	REVISION BY	DATE
G	MVG	04/05/2017
ECO: ECO-0121253	APPROVED BY: SM	DATE: 04/05/2017

ECO DESCRIPTION: ADDED P1 & P2 FOR TSTAT

COPYRIGHT REGAL BELOIT AMERICA, INC. ALL RIGHTS RESERVED.
PROPRIETARY AND CONFIDENTIAL INFORMATION - THIS DOCUMENT IS THE PROPERTY OF REGAL BELOIT AMERICA, INC. ("OWNER") AND CONTAINS OWNER'S PROPRIETARY INFORMATION. ANY PERSON, CORPORATION OR OTHER FIRM RECEIVING IT IS DEEMED, BY RECEIVING IT, TO AGREE THAT IT, AND/OR ANY PART OF IT, SHALL NOT BE DISCLOSED TO ANY PERSON, CORPORATION OR OTHER ENTITY, DUPLICATED, AND/OR USED, EXCEPT AS EXPRESSLY APPROVED IN WRITING IN ADVANCE BY OWNER. THIS DOCUMENT SHALL BE RETURNED TO OWNER UPON REQUEST. IT MAY BE SUBJECT TO CERTAIN RESTRICTIONS UNDER APPLICABLE EXPORT CONTROL LAWS AND REGULATIONS.

TOLERANCES UNLESS OTHERWISE SPECIFIED:

DEC.	INCH	mm	ANGLE
.X	±0.1	[±2.5]	±0.5°
.XX	±0.01	[±0.25]	
.XXX	±0.005	[±0.127]	
.XXXX	±0.0005	[±0.0127]	

REMOVE BURRS & BREAK SHARP EDGES: .003/.015 [.076/.381] X 45°
CORNER FILLETS: R.02 [.51]
MACHINED SURFACES: 125 INCH / 3.2 mm
mm SHOWN IN [BRACKETS]

DRAWN BY: DBT 12/16/97
DATE:
APPROVED BY: KH 12/17/97
DATE:
REFERENCE:
THIRD ANGLE PROJECTION

REGAL™ Regal Beloit America, Inc.

DESCRIPTION: CONN DIAGRAM-EXTERNAL
3 PHASE WITH PROTECTOR

MATERIAL: DECAL - 004014 (TSTAT) - 080582
PROCESS/FINISH: STOCK

SIZE: A
DRAWING NUMBER: 00501020
SHEET: 1 OF 1

Uncontrolled Copy

P.O. BOX 8003
WAUSAU, WI 54401-8003
PH. 715-675-3311

DATA VOLTS: 460

CERTIFICATION DATA SHEET

CONN. DIAGRAM: 005010.20
OUTLINE: 028781-750
WINDING: T634341 FR 3

CAT #: 116759.00

TYPICAL MOTOR PERFORMANCE DATA

HP	KW	SYNC RPM	FL RPM	FRAME	ENCLOSURE	TYPE	KVA CODE	DESIGN
1.5	1.1	1800	1750	56	TEFC	TFR	L	B

PH	HZ	VOLTS	AMPS	START TYPE	DUTY	INSL	S.F.	AMB	ELEV.
3	60/50	230/460#190/380	4.3/2.15&4.9/2.45	ACROSS THE LINE	CONT	F	1.15	40	3300

F.L. EFF	86.5	3/4 LD EFF	87.2	1/2 LD EFF	84.0	GTD EFF	ELECT. TYPE
F.L. PF	67.7	3/4 LD PF	63.0	1/2 LD PF	55.0	0.0	SQ CAGE IND RUN

F.L. TORQUE	LR AMPS @ 460 V	L.R. TORQUE	B.D. TORQUE	F.L. RISE (°C)
4.5 LB-FT	18.5	17.2 LB-FT 382%	20.4 LB-FT 453%	45

PRESSURE @ 3	POWER	ROTOR WK²	MAX. LOAD WK²	SAFE STALL TIME	STARTS/HOUR	MOTOR WGT
65 dBA	74 dBA	0.14 LB-FT²	0.1 LB-FT²	10 SEC.	3	0 LB.

*** SUPPLEMENTAL INFORMATION ***

DE BRACKET TYPE	ODE BRACKET TYPE	MOUNT TYPE	MOTOR ORIENTATION	SEVERE DUTY	HAZARDOUS LOCATION	DRIP COVER	SCREENS	PAINT
STANDARD	STANDARD	RIGID	HORIZONTAL	NO	NONE	NO	NONE	N - LEESON WATTS

BEARINGS DE	BEARINGS ODE	GREASE	SHAFT TYPE	SPECIAL DE	SPECIAL ODE	SHAFT MATERIAL	FRAME MATERIAL
BALL 6203	BALL 6203	POLYREX EM	STANDARD 56	NONE	NONE	1144 STRESSPROOF (C-223)	ROLLED STEEL

THERMOSTATS	PROTECTORS	WDG RTD's	BRG RTD's	THERMISTORS	CONTROL	SPACE HEATERS
TSTATS (N/C)	NOT	NONE	NONE	NONE	FALSE	NA

R1 (ohms/ph)	R2 (ohms/ph)	X1 (ohms/ph)	X2 (ohms/ph)	Xm (ohms/ph)	VIBRATION (in/sec)	FLOAT
0	0	0	0	0	0.080	ODE

* NOTES *

INVERTER TORQUE: NONE
INV. HP SPEED RANGE: NONE

ENCODER: NONE
NONE
NONE NONE **PPR**

BRAKE: NONE
NONE NONE
FT-LB: NA
VOLTAGE: NONE **HZ:**
UL: Y-(LEESON UL REC)

DATE: 1/24/2018

Uncontrolled Copy

Data Sheet

Date: 1/24/2018

116759.00

Data @ 460 V

Motor Load Data

Load	0%	25%	50%	75%	100%	115%	125%	LR	
Current (Amps)	1.23	1.33	1.50	1.81	2.15	2.32	2.52	18.5	
Torque (ft-lb)	0.00	1.10	2.25	3.4	4.5	5.2	5.6	17.2	
RPM	1800	1785	1772	1760	1750	1,738	1732	0	
Efficiency (%)		74.4	84.0	87.2	86.5	86.0	85.5		
P.F. (%)	9.9	35.5	55.0	63.0	67.7	75.0	80.0	48.0	

Motor Speed Data

	LR	Pull-Up	BD	Rated	Idle
Speed (RPM)	0	900	1600	1750	1800
Current (Amps)	18.5	16.1	12.1	2.15	1.23
Torque (ft-lb)	17.2	16.0	20.4	4.5	0.00

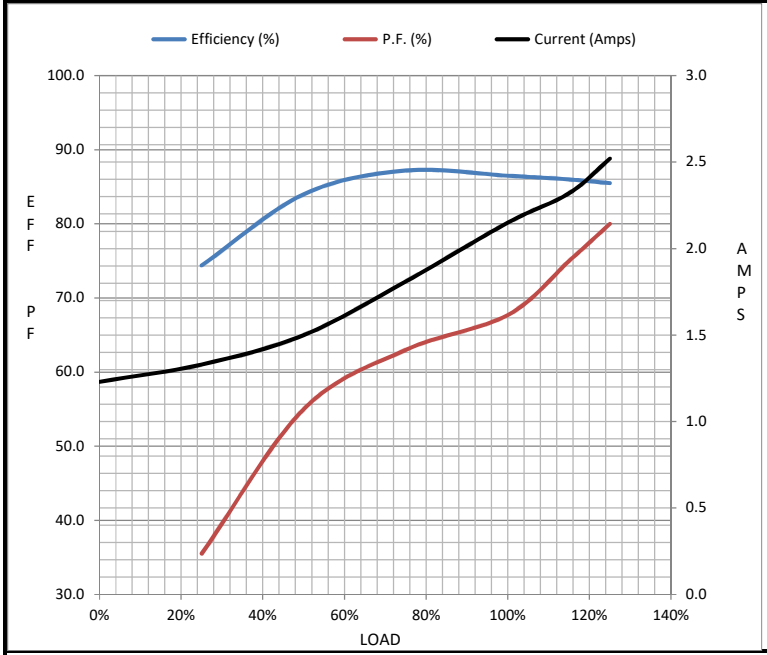

Information Block

HP	1.5	
Sync. RPM	1800	
Frame	140	
Enclosure	TEFC	
Construction	TFR	
Voltage	230/460#190/380	V
Frequency	60	Hz
Design	B	
LR Code letter	L	
Service Factor	1.15	
Temp Rise @ FL	45	° C
Duty	CONT	
Ambient	40	° C
Elevation	1,000	feet
Rotor/Shaft wk²	0.14	Lb-Ft²
Ref Wdg	T634341 FR	
Sound Pressure @ 1M	65	dBA
VFD Rating	NONE	
Outline Dwg	028781-750	
Conn. Diag	005010.20	

Additional Specifications:

0

0

EQUIV CKT (OHMS / PHASE)

R1	R2	X1	X2	Xm
0.0000	0.0000	0.0000	0.0000	0.0000

Speed -Torque Curve

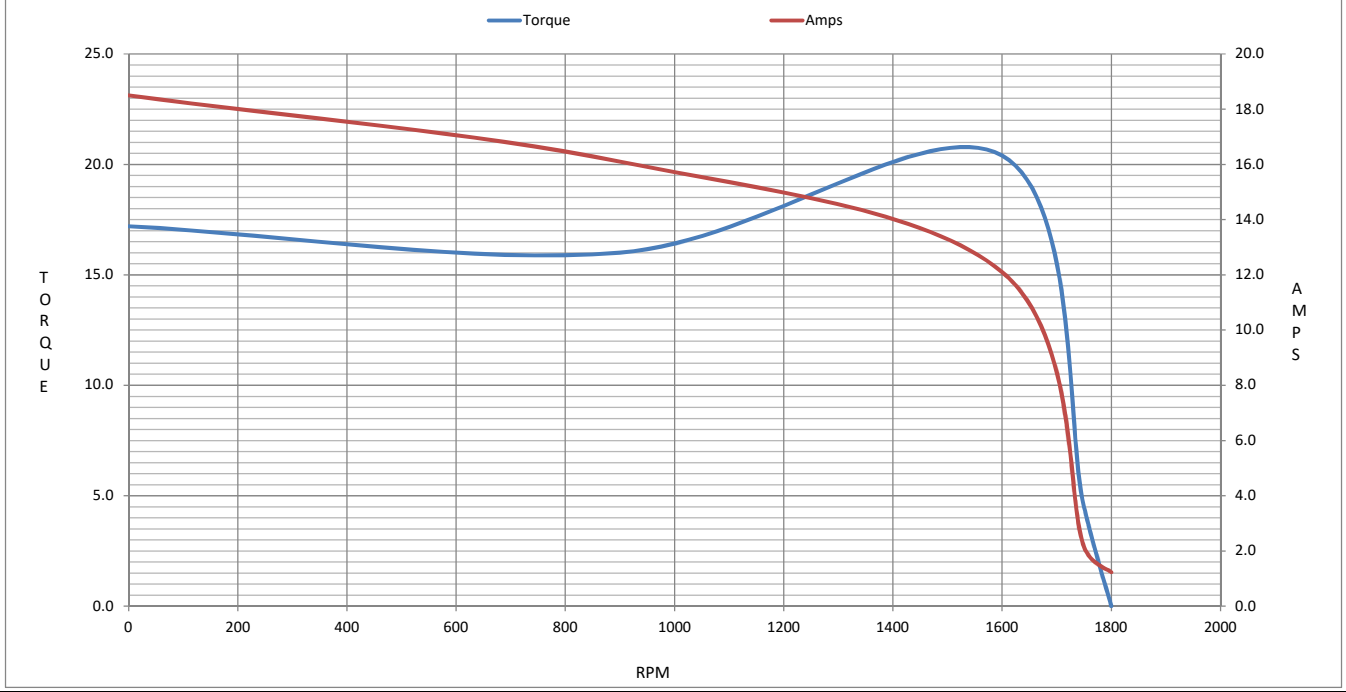

EC Declaration of Conformity

The undersigned representing
the manufacturer:

Regal Beloit America
100 East Randolph St.
Wausau, WI 54401

and the authorized representative
established within the Community:

Marathon Electric UK
6F Thistleton Road Ind. Estate
Market Overton
Oakham, Rutland LE15 7PP UK

are committed to providing customers with products that comply with applicable regulations and international protocols to which they are subject, including the requirements of the European Parliament Directive on the Harmonization of the laws relating to electrical equipment designed for use within certain voltage limits (2014/35/EU).

Regal Beloit America declares that the following product(s), to which this declaration relates, are in conformity with the relevant sections of the EC standards listed below.

This statement supersedes any statements previously issued pertaining to the product(s) listed below and is subject to change without notice.

Model No : 116759.00

(Model No. may contain prefix and/or suffix characters)

Catalog No : 116759.00

Rework No : N/A

Directives :

Low Voltage Directive 2014/35/EU

Harmonized Standards Used :

EN 60034-1: 2010 (IEC 60034-1: 2010)
EN 60034-5: 2001/A1:2007 (IEC 60034-5: 2000/A1:2006)

Authorized Representative:

Michael A. Logsdon
Vice President, Technology

Authorized Representative in the Community:

Julian Clark
Marketing Engineer

Created on 09/01/2022

CE 22