Uncontrolled Copy

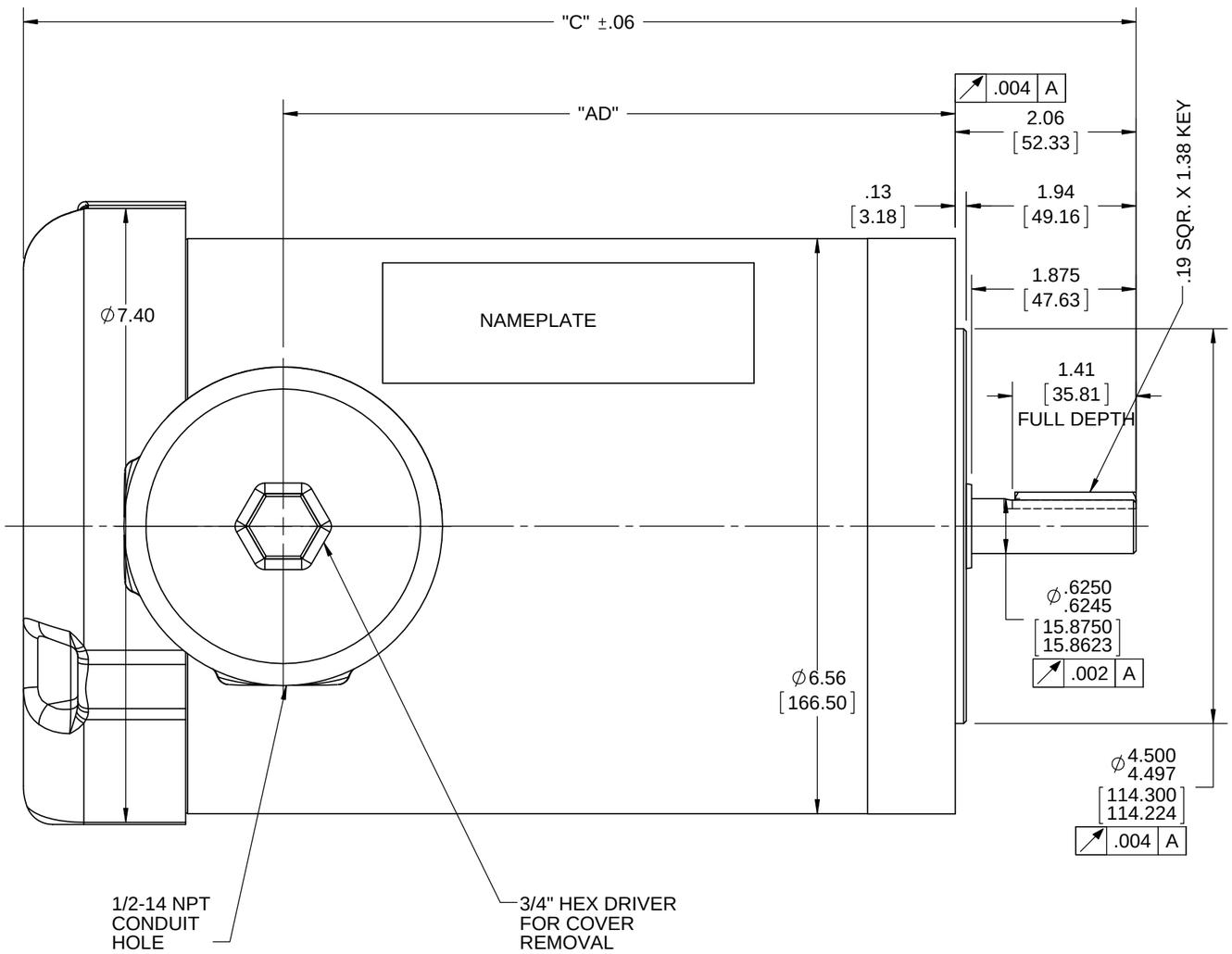

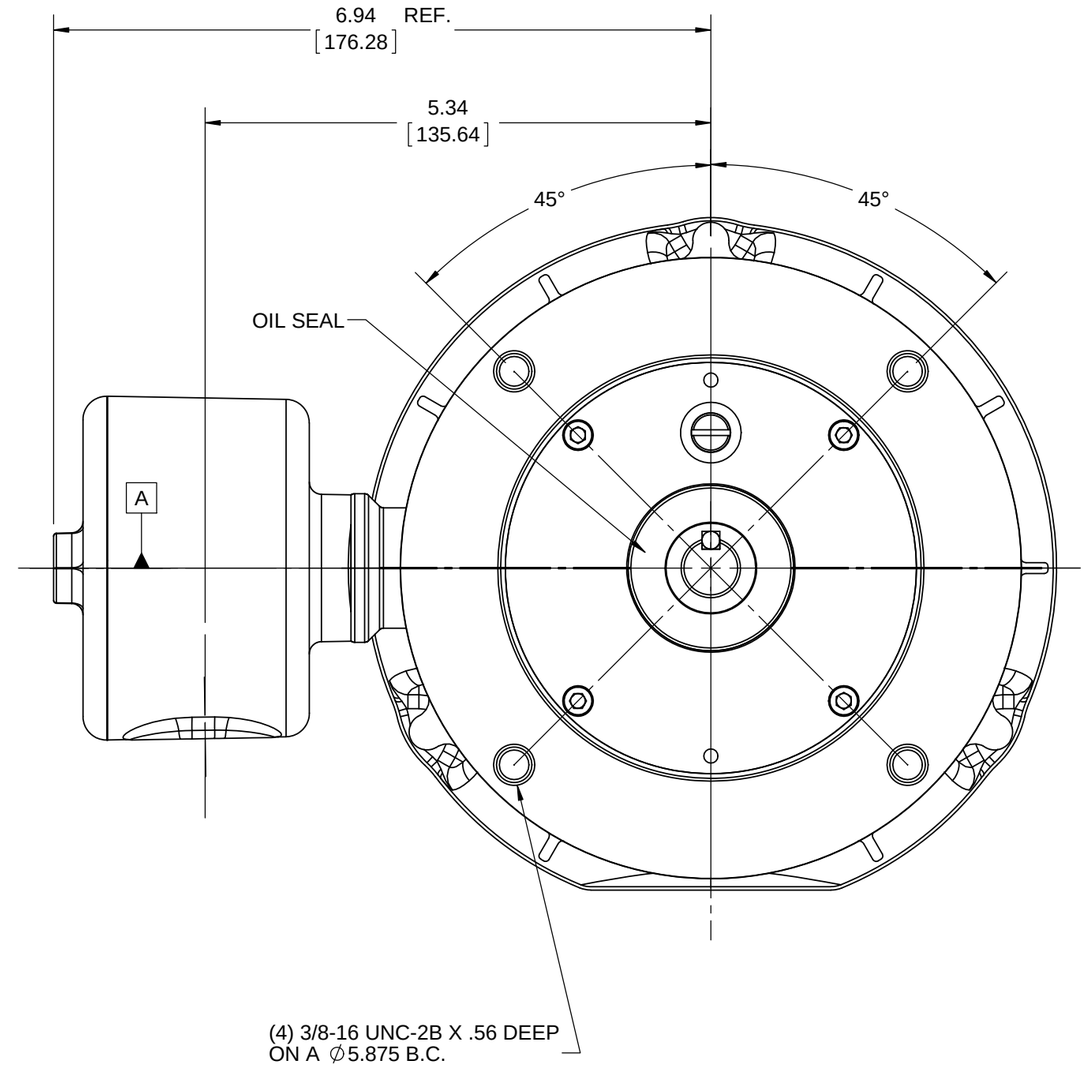

DASH NO.	"C"	"AD"
525	10.19	5.16
625	11.19	6.16
675	11.69	6.66
700	11.94	6.91
725	12.19	7.16
750	12.44	7.41
775	12.69	7.66
800	12.94	7.91
825	13.19	8.16
850	13.44	8.41

DRAWING REVISION	REVISION BY	DATE
F	AS	11/23/16
ECO: ECO-0113507	APPROVED BY: JD	DATE: 11/23/16

ECO DESCRIPTION: ADDED DASH # 700 & # 850

COPYRIGHT REGAL BELOIT AMERICA, INC. ALL RIGHTS RESERVED.
PROPRIETARY AND CONFIDENTIAL INFORMATION - THIS DOCUMENT IS THE PROPERTY OF REGAL BELOIT AMERICA, INC. ("OWNER") AND CONTAINS OWNER'S PROPRIETARY INFORMATION. ANY PERSON, CORPORATION OR OTHER FIRM RECEIVING IT IS DEEMED, BY RECEIVING IT, TO AGREE THAT IT, AND/OR ANY PART OF IT, SHALL NOT BE DISCLOSED TO ANY PERSON, CORPORATION OR OTHER ENTITY, DUPLICATED, AND/OR USED, EXCEPT AS EXPRESSLY APPROVED IN WRITING IN ADVANCE BY OWNER. THIS DOCUMENT SHALL BE RETURNED TO OWNER UPON REQUEST. IT MAY BE SUBJECT TO CERTAIN RESTRICTIONS UNDER APPLICABLE EXPORT CONTROL LAWS AND REGULATIONS.

TOLERANCES UNLESS OTHERWISE SPECIFIED:

DEC.	INCH	mm	ANGLE
.X	±0.1	[±2.5]	±0.5°
.XX	±0.01	[±0.25]	
XXX	±0.005	[±0.127]	
.XXXX	±0.0005	[±0.0127]	

REMOVE BURRS & BREAK SHARP EDGES: .003/.015 [.076/.381]
CORNER FILLETS: .02 [.51]
MACHINED SURFACES: 125 INCH / 3.2 mm
mm SHOWN IN [BRACKETS]

DRAWN BY	LST
DATE	6/12/14
APPROVED BY	
DATE	
REFERENCE	
THIRD ANGLE PROJECTION	

REGAL™ Regal Beloit America, Inc.

DESCRIPTION: MOTOR ASSY
56C FRAME - TEFC- "C" FACE

MATERIAL | PROCESS/FINISH

SIZE: B | DRAWING NUMBER: 607-0175 | SHEET: 1 OF 1