34LYF002

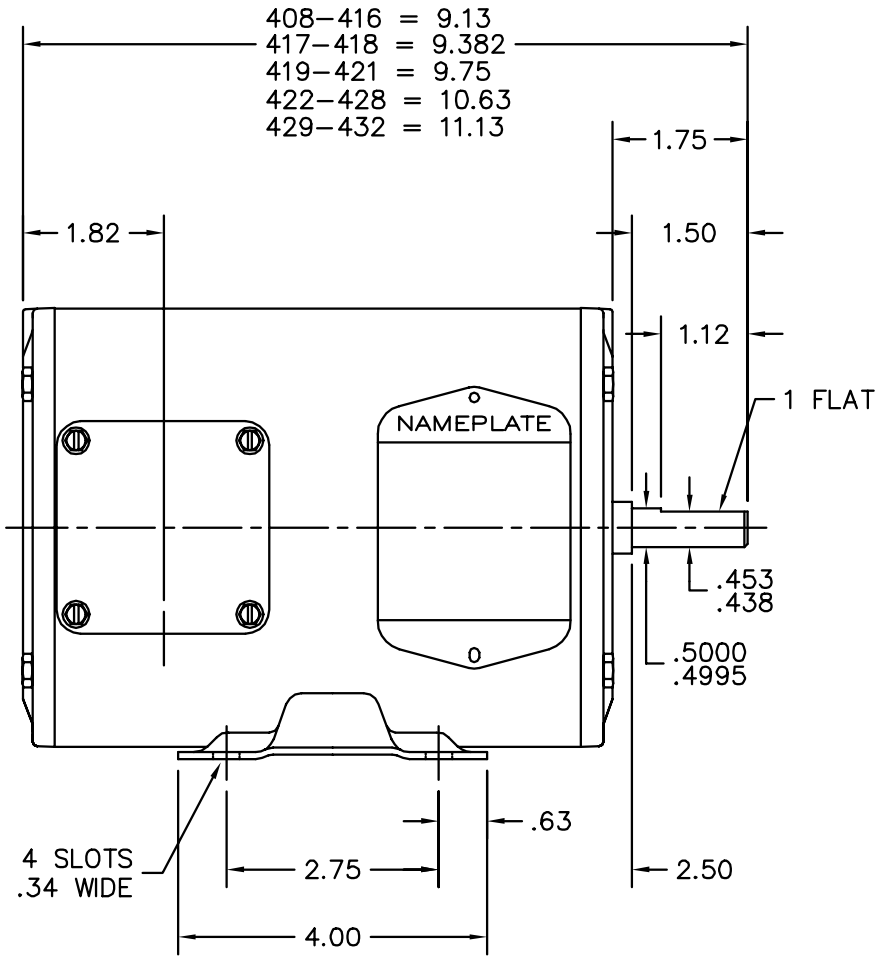

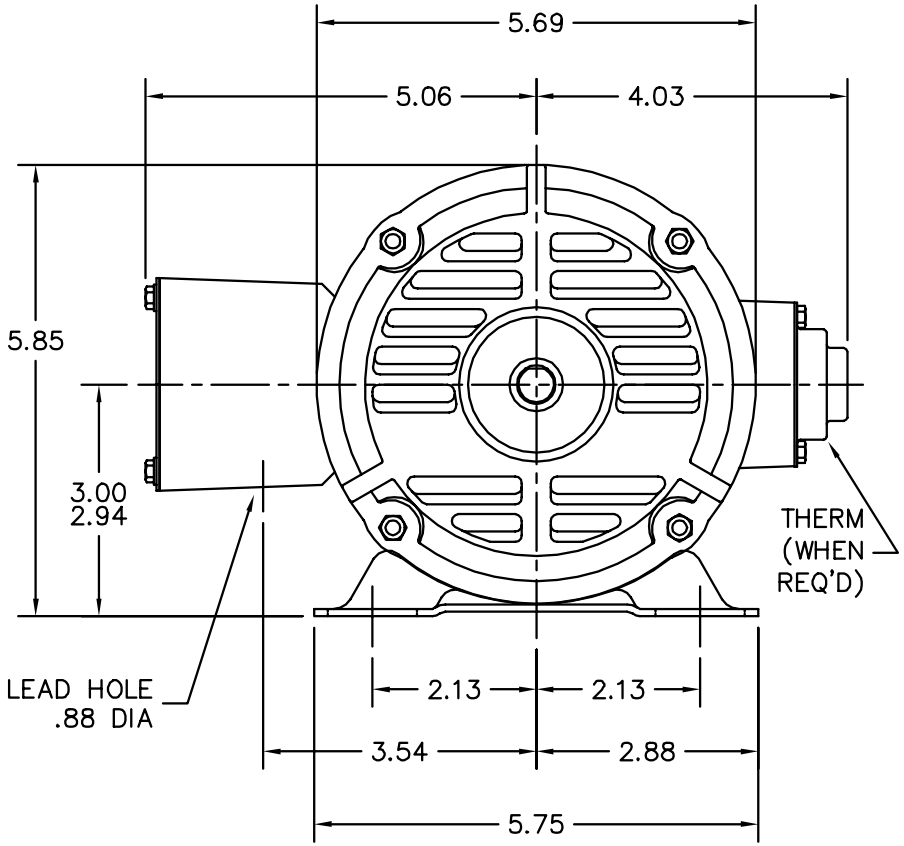

CUSTOMER IS RESPONSIBLE FOR DETERMINING THAT MOTOR PERFORMANCE IS SUITABLE IN THE APPLICATION.

REV. DESC: NEW KBOX & LID			
REV. LTR: K	BY: RT	REVISED: 14:12:27 11/14/2003	TDR: 314968
34LYF002		FILE: AAA00026293	REF: 34LYF002
		MTL: –	

BALDOR ELECTRIC Co.

STD HORZ MODEL 34M NEMA 48 OPEN

34LYF002