619680-001

ENCLOSURE: DRIP PROOF

MOUNTING: FOOT

DRIVE METHOD: COUPLED OR BELTED

RPM-AC VARIABLE SPEED ALTERNATING CURRENT MOTOR
RL3698Z

COOLING: FORCE VENTILATED

ACCESSORIES: PROVISIONS FOR TACHOMETER MOUNTING ONLY WHEN SPECIFIED

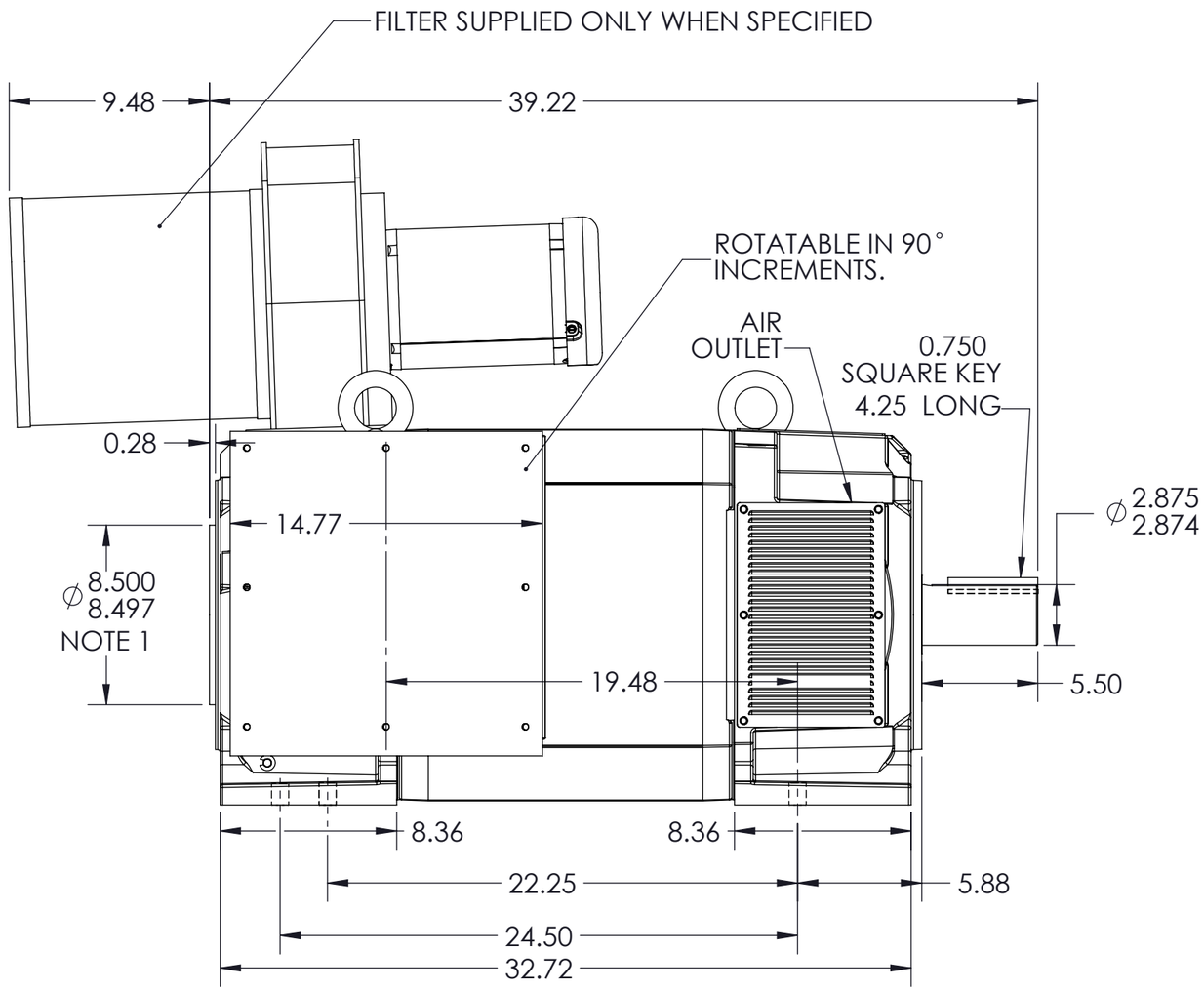

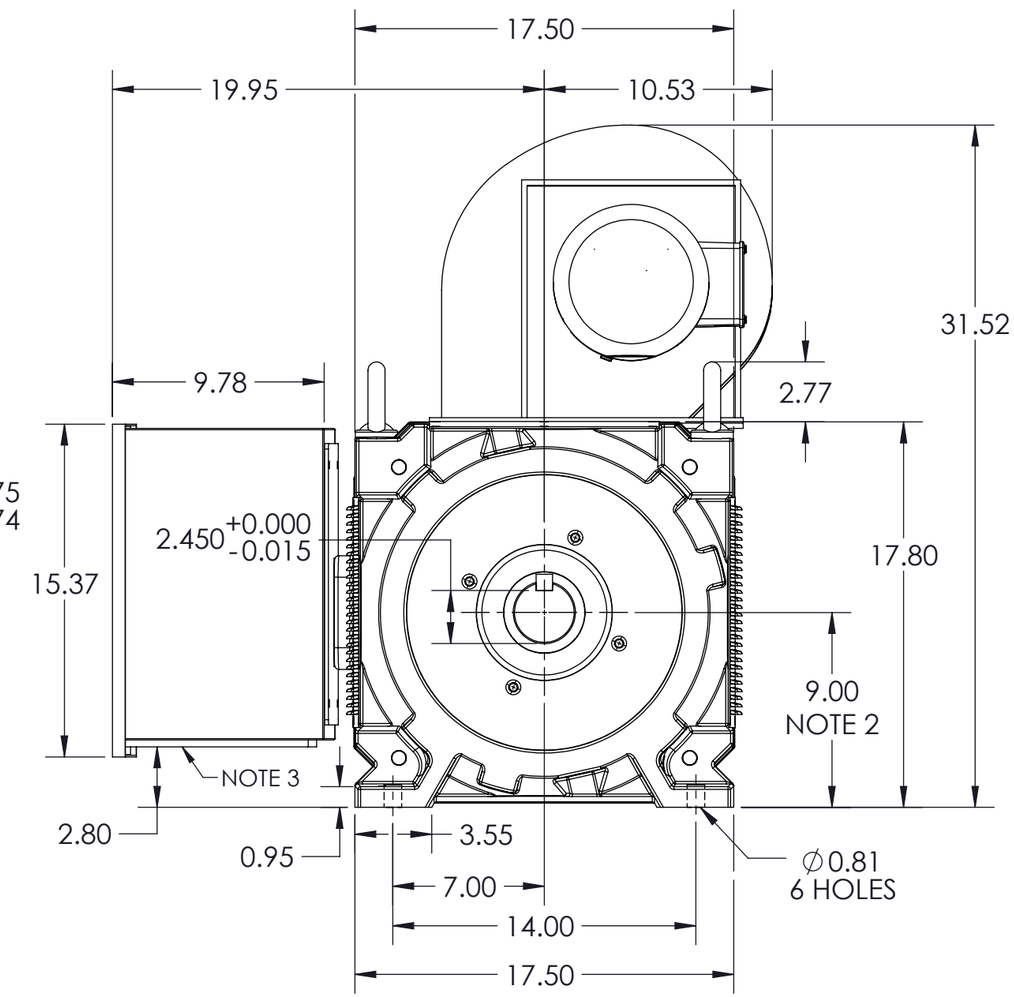

NOTES:

1. O.D.E. C-FACE & TACHOMETER MOUNTING. 1/2-13 TAP, 1.00 DEEP, ON A ∅7.25 B.C. FACE RUNOUT AND ECCENTRICITY 0.004 MAX. T.I.R.
2. SHAFT HEIGHT WILL NOT BE EXCEEDED. SHIMS UP TO 0.06 INCHES IN THICKNESS ARE USUALLY REQUIRED FOR COUPLED OR GEARED MACHINES.
3. REMOVABLE COVER PLATE FOR CUSTOMER DRILLING.

- TERMINAL BOX MAY BE LOCATED F1, F2 OR F3, IF SPECIFIED.
- REFER TO 616779-55 FOR SPECIFIED TACHOMETER DIMENSIONS.
- BLOWER ASSEMBLY CAN BE LOCATED F1, F2, OR F3, IF SPEC'D.
- BLOWER ASSEMBLY AND TERMINAL BOX CANNOT BE LOCATED AT THE SAME POSITION.

DIMENSIONS ARE IN INCHES

MOTOR WEIGHT: 1710 LBS. (MAY VARY 15% FOR NON-STANDARD RATINGS AND / OR ACCESSORIES.)

CUSTOMER IS RESPONSIBLE FOR DETERMINING THAT BALDOR'S PRODUCT WILL PERFORM SUITABLY IN THE INTENDED APPLICATION

REV. DESC: ADD MISSING DIMENSIONS			
REV: D	VERSION: 04	REVISED: 11:45:45 05/13/2016	TDR: 000000979977
MODEL NO. 619680-001			REF: -
BY: RGGWT			B

BALDOR

DIM SHEET,RL3698Z,RPM-AC,FV

619680-001