SS518657

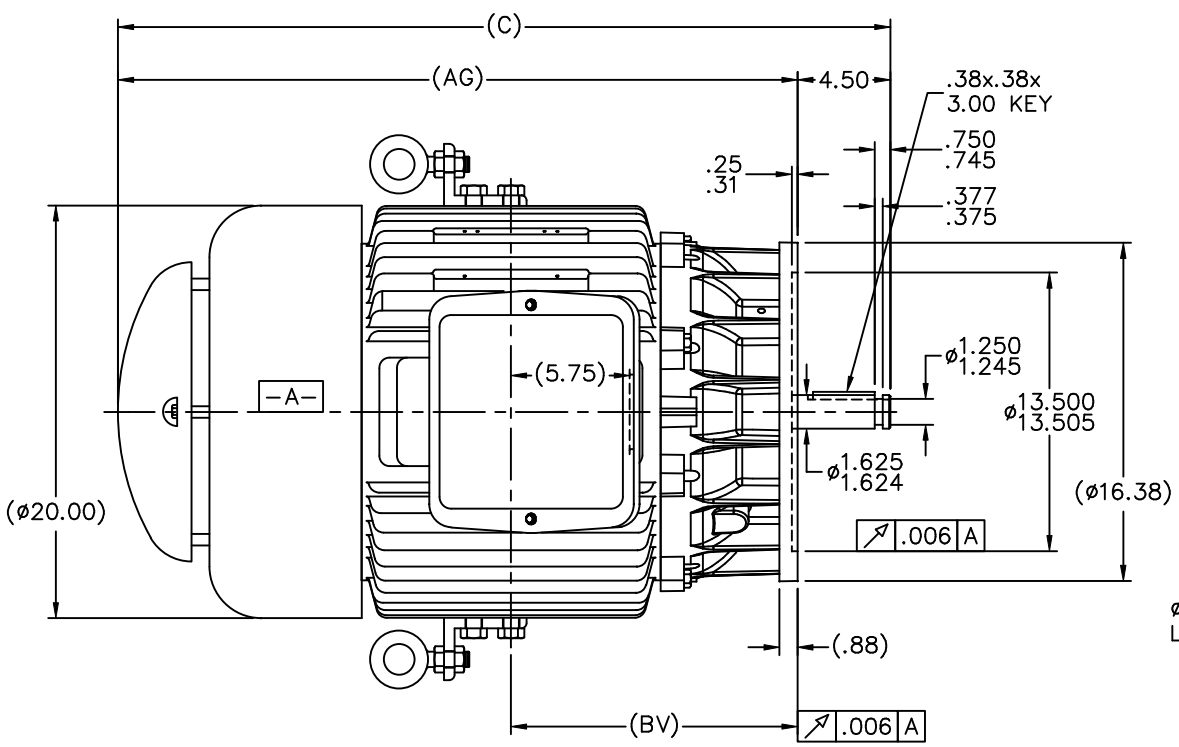

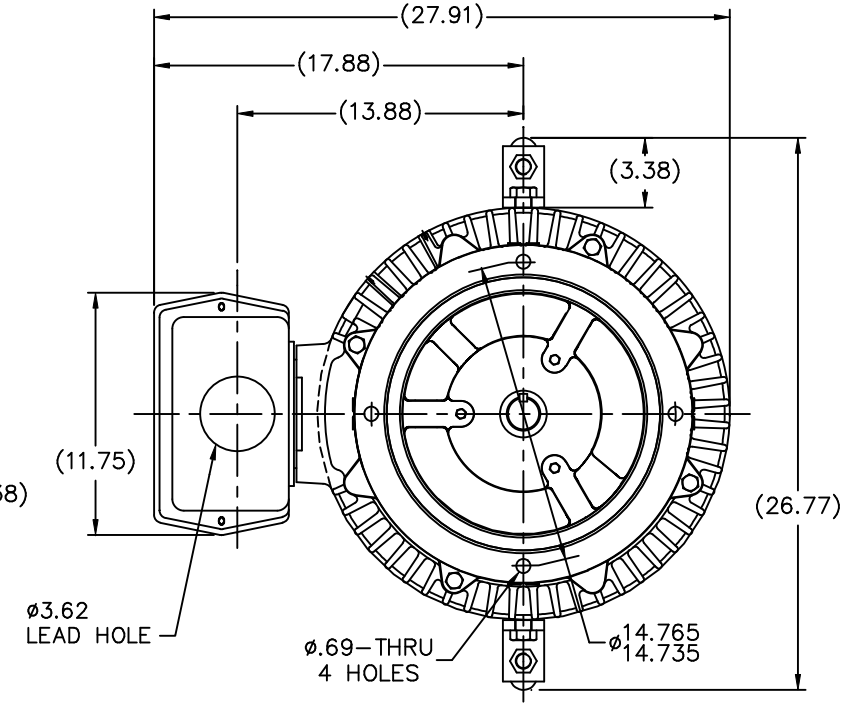

NOTES:
1. CONDUIT BOX CAN BE ROTATED IN 90° STEPS.
2. NAMEPLATES TO BE READ FROM CONDUIT BOX SIDE OF MOTOR

(REPLACES B–SS507344)

DASH	FRAME	C	AG	BV
1450	360HPV	37.44	32.94	13.88

NO.	REVISION	BY & DATE	CHK
2	REDRAWN IN AUTOCAD	TAT 07-22-2004	ML
1	NEW DRAWING CN34094	TJB 08-13-2001	

TOLERANCES UNLESS SPECIFIED

DEC.	INCHES
.X	±.1
.XX	±.03
.XXX	±.005
.XXXX	±.0005
ANG	±7°30"

MARATHON ELECTRIC

TITLE OUTLINE
360HPV FR. – VERT. 'P' BASE – TEFC

MAT'L.

FINISH

CAD FILE ss518657

RFP

DIST WA

DRAWN	TJB 08-10-2001
CHK	ML 08-13-2001
APPD	GK 08-13-2001
SCALE	1=6
REF	
FMF	
PREV	

SIZE B | DRAWING NO. SS518657 | PAGE OF | REV. 2

THIS DRAWING IN DESIGN AND DETAIL IS OUR PROPERTY AND MUST NOT BE USED EXCEPT IN CONNECTION WITH OUR WORK ALL RIGHTS OF DESIGN AND INVENTION ARE RESERVED
THIS IS AN ELECTRONICALLY GENERATED DOCUMENT – DO NOT SCALE THIS PRINT