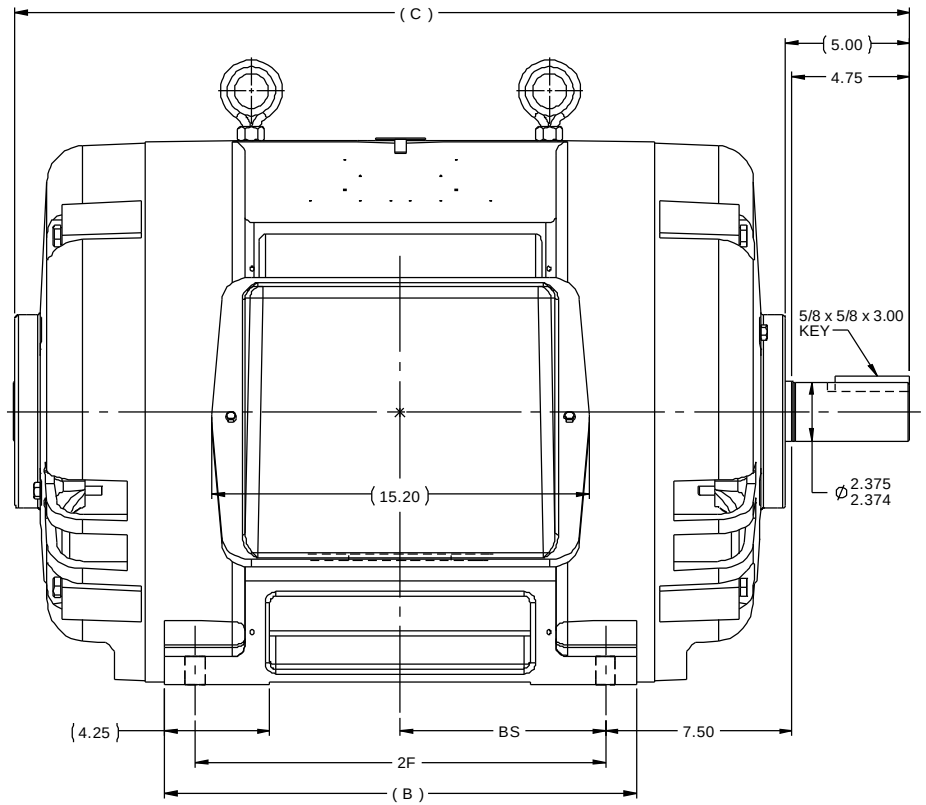

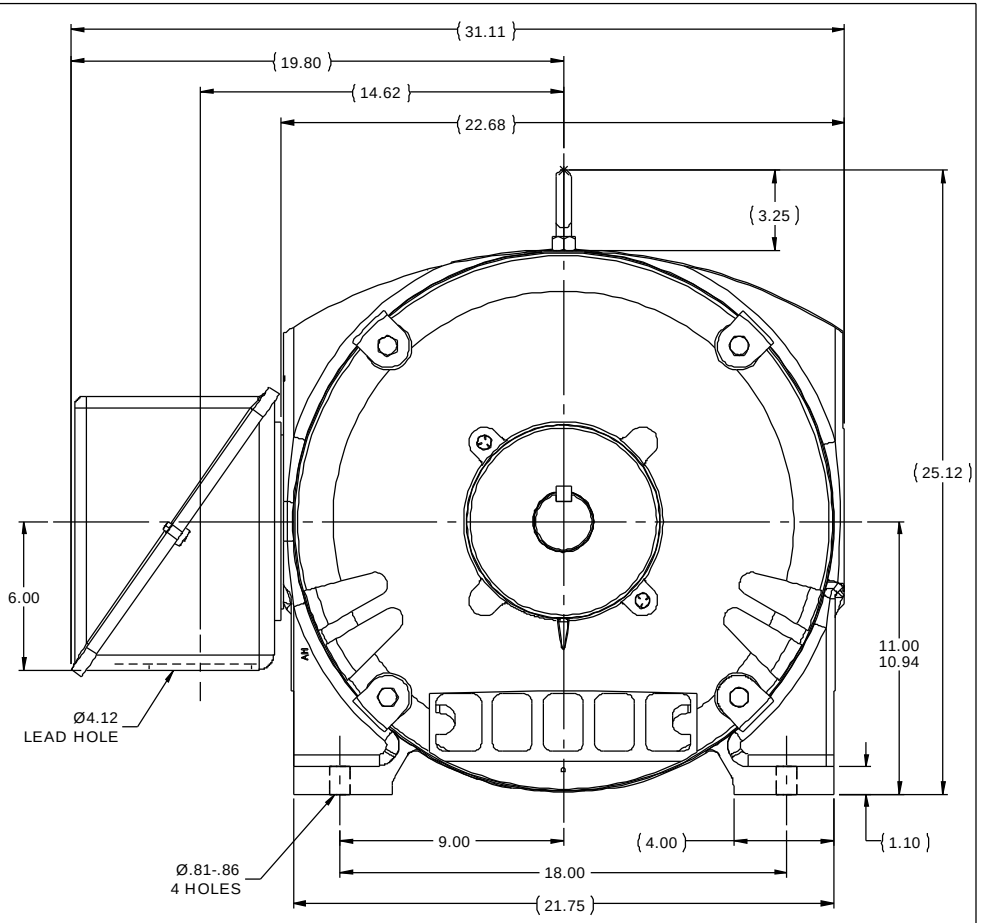

NOTES:
1. CONDUIT BOX CAN BE ROTATED IN 90° STEPS.
2. CONDUIT BOX CAN BE MOUNTED ON OPPOSITE SIDE BY REMOVING BRACKETS AND TURNING FRAME 180°.
3. NAMEPLATES TO BE READ FROM CONDUIT BOX SIDE OF MOTOR.

DASH	FRAME	B	C	2F	BS	
1850	444TS	17.00	34.00	14.50	7.25	
2050	445TS	19.00	36.00	16.50	8.25	

NO	REVISION	BY & DATE	CHK
6	UPDATED TO CURRENT STD'S. MU114528	JJB 08-01-2013	TDB
5	REVISED TO NEW CONDUIT BOX CN28063	KL 10-21-1999	
4	REDRAWN IN AUTOCAD	TLB 03-11-1998	

TOLERANCES UNLESS SPECIFIED

DEC	INCHES
X	±.1
XX	±.03
XXX	±.005
XXXX	±.0005
ANG	±1/2°

marathon electric

TITLE OUTLINE
444/445TS FR. - DR. PR. STD.

MAT'L
FINISH

DRAWN TLB 03-11-1988
CHK FG 03-11-1988
APPR GK 03-11-1988
SCALE 1:5
REF
FMF
PAGE OF

THIRD ANGLE PROJECTION

RFP 03-11-1988
PREV
NETWORK FILE NAME SS509642

SIZE B
DRAWING NO SS509642
REV 6

8/1/2013 12:48:05 PM - Converted by Connexus