M-12573 | 1

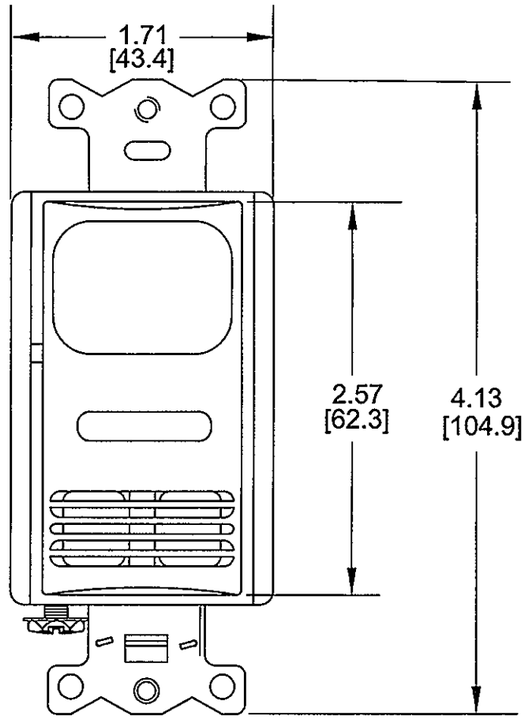


SINGLE CIRCUIT SENSOR

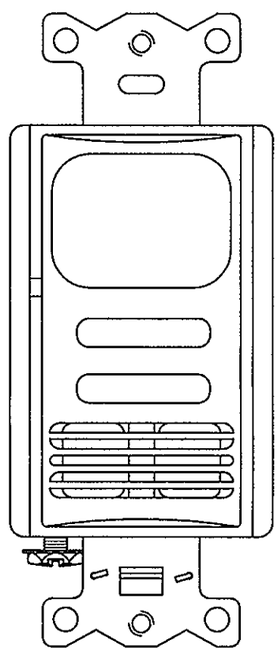

DUAL CIRCUIT SENSOR

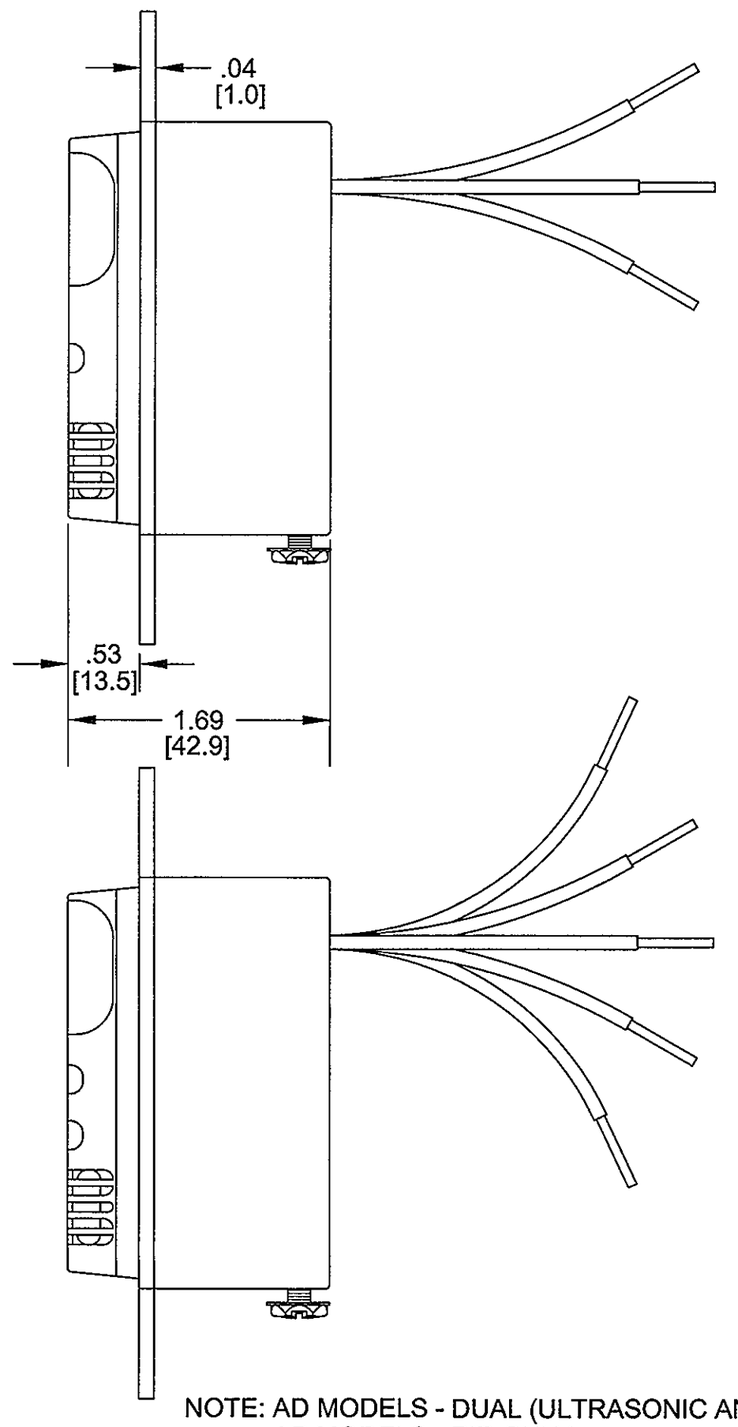


NOTE: AD MODELS - DUAL (ULTRASONIC AND PIR)
AP MODELS - PIR ONLY
AU MODELS - ULTRASONIC ONLY

LIST OF PARTS

| DESCRIPTION | MATERIAL | FINISH |
|---|---|---|
| | | |

DIMENSION SHEET FOR CAT. NO. SEE NOTES

REPAIRABLE ☐ NON-REPAIRABLE ☒

| SYM | REVISIONS | APP | DATE |
|---|---|---|---|
| 1 | RELEASED PER DCN 20458 SPN | DJP | 5/13/14 |

THE DESIGN AND DIMENSIONS OF THE PRODUCT SHOWN ON THIS DRAWING ARE SUBJECT TO CHANGE WITHOUT NOTICE

TITLE
SINGLE & DUAL CIRCUIT
MOTION SENSOR SWITCHES

TOLERANCES UNLESS OTHERWISE SPECIFIED
.XX = ±.01
.XXX = ±.005
ANGLES = ±2°

WIRING DEVICE-KELLEMS
HUBBELL INCORPORATED
SHELTON, CT

| | | | |
|---|---|---|---|
| DR. BY | SPN | APP. BY | DJP |
| TR. BY | | SCALE | NONE |
| CHK'D BY | DJP | DATE | 5/13/14 |

B

M-12573

1

CODE 74545