M-12375	1

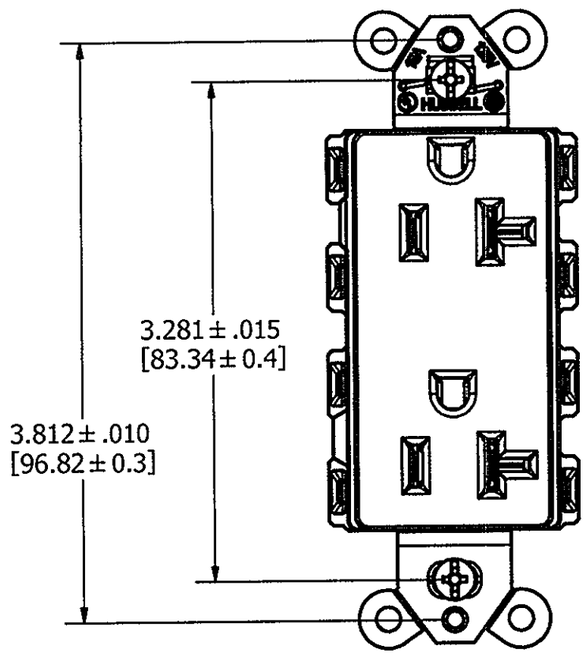

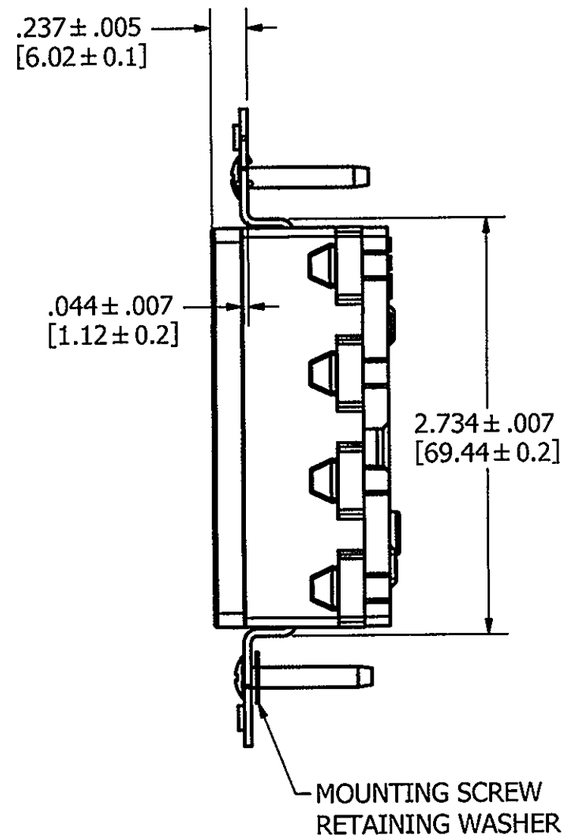

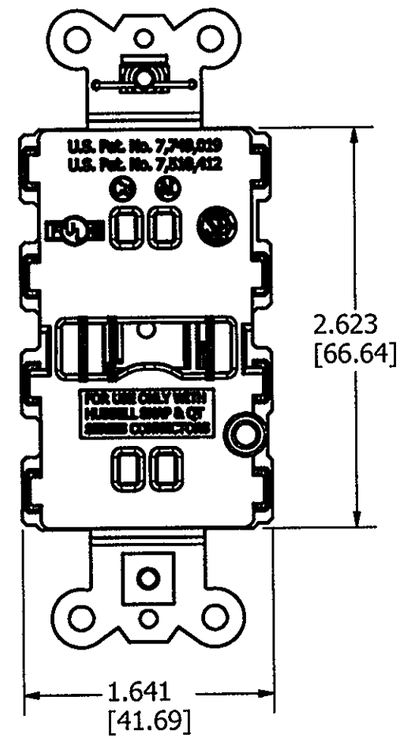

LIST OF PARTS		
DESCRIPTION	MATERIAL	FINISH
TOP	NYLON 6/6	SPI A-3
BASE	NYLON 6/6	SPI A-3
LINE CONTACTS	BRASS	
GROUND CONTACT	BRASS	
BRIDGE	.04 GALV STL	
STAPLE	S.S.	
WASHER	PVC FILM	BLACK
MOUNTING SCREWS	STEEL	ZINC PLT

RATING	BROWN	IVORY	GRAY	WHITE	BLACK	ALMOND	LIGHT ALMOND	OFFICE WHITE	ORANGE	RED	BLUE
15A	SNAP2152NA	SNAP2152INA	SNAP2152GYNA	SNAP2152WNA	SNAP2152BKNA	--	SNAP2152LANA	--	--	SNAP2152RNA	SNAP2152BLNA
20A	SNAP2162NA	SNAP2162INA	SNAP2162GYNA	SNAP2162WNA	SNAP2162BKNA	--	SNAP2162LANA	--	--	SNAP2162RNA	SNAP2162BLNA

NOTES:
1. DIMENSIONS ARE IN INCHES [MM].
2. ALL DEVICES UL LISTED AND CSA CERTIFIED.

SYM	DESCRIPTION	APPRO	DATE
1	RELEASED PER DCN19258 EB	TLS	12/18/2012

THE DESIGN AND DIMENSIONS OF THE PRODUCT SHOWN ON THIS DRAWING ARE SUBJECT TO CHANGE WITHOUT NOTICE

TITLE
DECORATOR RECEPTACLE, 15/20A 125V
NON IG & TR & LED

TOLERANCES UNLESS OTHERWISE SPECIFIED
FRACTIONS ±1/64
DECIMALS ±.005
ANGLES ±2°

WIRING DEVICE-KELLEMS
HUBBELL INCORPORATED
SHELTON, CT

DR. BY ebazayev APP. BY TLS
TR. BY SCALE
CHK'D BY TLS DATE 1/10/2013

DIMENSION SHEET FOR CAT. NO.
REPAIRABLE ☐ NON-REPAIRABLE ☐
B
M-12375
1

CODE 74545