S-118-AA-DM (2,200 lbs Fully Powered Stacker with Adjustable Forks & Adjustable Legs)

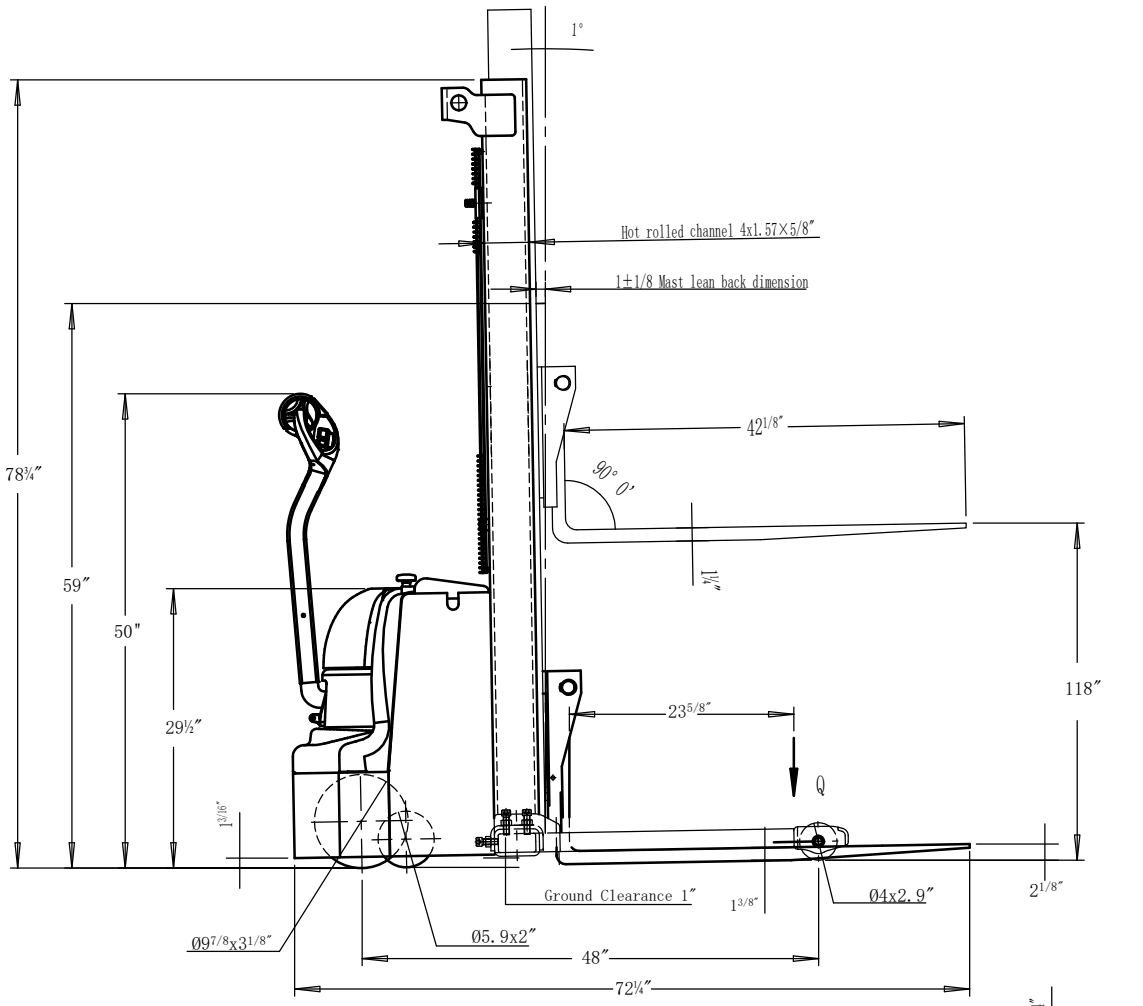

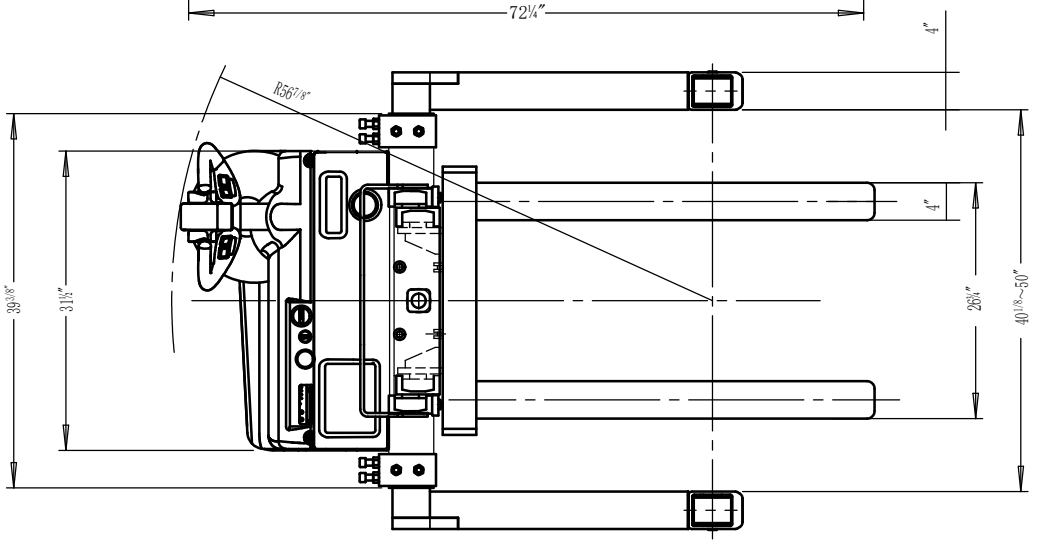

Specifications

Model # S-118-AA-DM
Capacity (UDL): 2,200 lbs 0-62"
Capacity (UDL): 1,500 lbs 62 - 118"
Lift Height: 118"
Lowered Height: 2 1/8"
Adjustable Forks & Adjustable Legs Overall
Mast height (Retracted): 78 3/4"
Overall Mast height (Extended): 141 3/8"
Lift Motor: 24V/2Kw
Drive Motor: 24V/0.7Kw
Drive Wheel: Ø9 7/8x3 1/8"
Front Wheel: Ø4x2.9"
Stabilizer wheel: Ø5.9x2.0"

Battery: 2x12V/70~85Ah
Battery Charger: 24V/10 amps
Travel speed w/load: 2.6m/h
Travel speed w/o load: 3.1m/h
Raise unloaded: 20.91 secs
Raise loaded: 30.87 secs
Down unloaded: 27.15 secs
Down loaded: 29.51 secs

VESTIL MANUFACTURING CORP.	
S-118-AA-DM	
Fully Powered Stacker with Dual Mast - Straddle Legs and Forks	
T.M	Date: 06/11/2020