The Timken Company
4500 Mt Pleasant St. NW
N. Canton, OH 44720
Phone: (234) 262-3000
E-Mail: CustomerCAD@timken.com • **Web site:** www.timken.com

Part Number TAAPH052K908S, Double Nut Tapered Adapter Four-Bolt Pillow Block

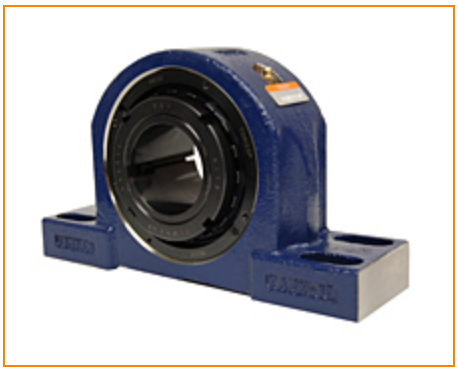

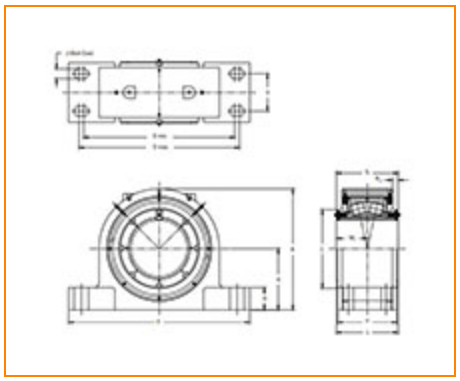

Specifications | Dimensions | Radial and Thrust Factors | Engineering Bearing Attributes

Specifications

Engineering Group	Mounted Bearing
Bearing Number	23152
Shaft Size	9.5000 in
Shaft Size Type	Imperial
Full Timken Part Number	TAAPH052K908SB TAAPH052K908SC TAAPH052K908SEB TAAPH052K908SEC TAAPH052K908SEM TAAPH052K908SEN TAAPH052K908SEO TAAPH052K908SET TAAPH052K908SMT TAAPH052K908SNT TAAPH052K908SO TAAPH052K908ST
Locking Style	Double Nut Tapered Adapter

Housing Construction	Four-Bolt Pillow Block

Dimensions

Dimension A	9.5 in 241.3 mm
Dimension B	20.16 in 512.1 mm
Dimension C	12.99 in 330 mm
Dimension D Min	24.75 in 628.6 mm
Dimension D Max	27.88 in 708.1 mm
Dimension E	5.25 in 133.3 mm
Dimension F	32.75 in 831.8 mm
Dimension G	9.3 in 236.2 mm
Dimension H	3 in 76.2 mm
Dimension J (Bolt Size)	1.5 in 36 mm
Dimension L	10.1 in 256.5 mm
Dimension MT	5.45 in 138.4 mm
Dimension RTT	1.15 in 29.2 mm

Dimension ST	10.82 in 274.8 mm

Radial and Thrust Factors

C0 - Static Load	885000 lbf 3930000 N
C - Dynamic Load (Basic)	603000 lbf 2680000 N
e - Geometry Factor	0.3
Y1 - Geometry Factor	2.23
Y2 - Geometry Factor	3.31

Engineering Bearing Attributes

Float	0.083 in 2.108 mm

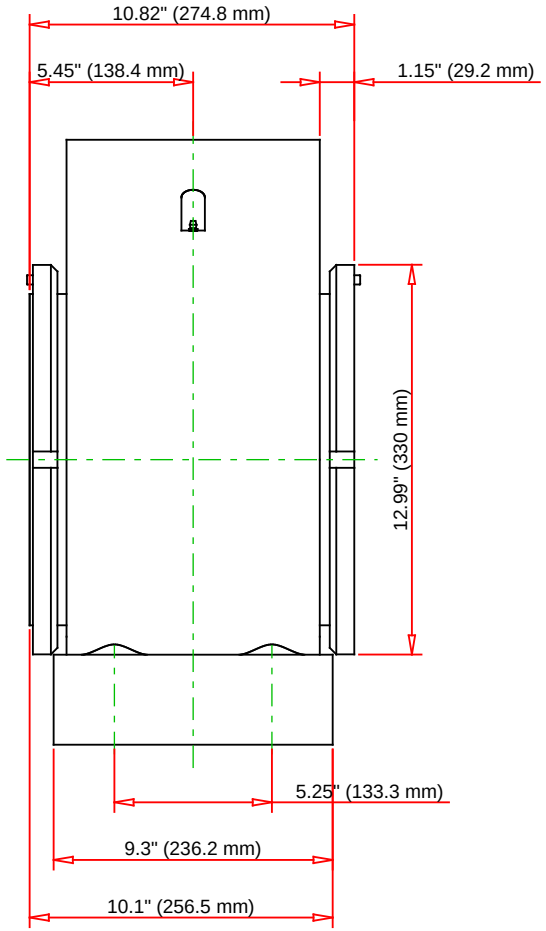

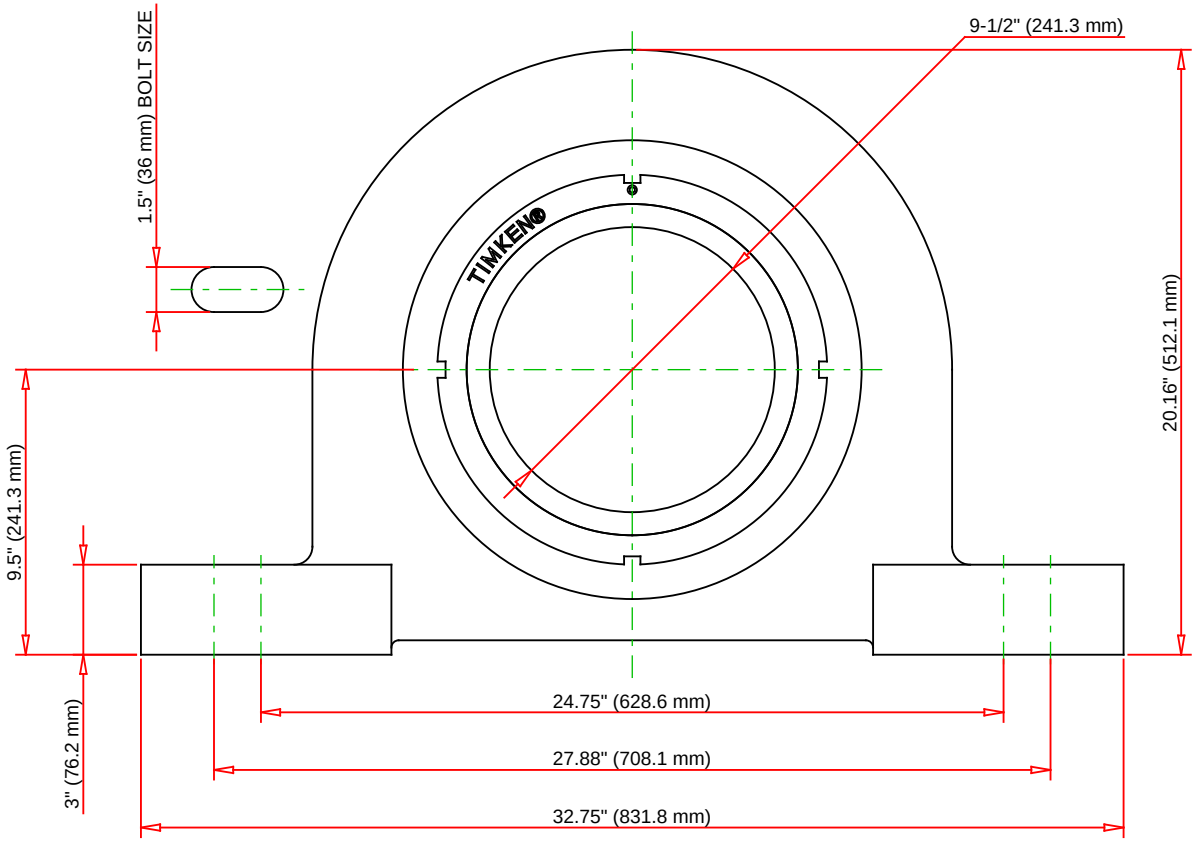

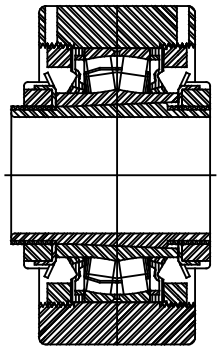

Note: Section View not to Scale

C - Dynamic Load	603000	lbf	2680000	N	TIMKEN
C0 - Static Load	885000	lbf	3930000	N	
Weight	764	lb	346	kg	
Max. Speed T-Seals & Grease	rpm				THE TIMKEN COMPANY
Rad. Clearance - Max.					NORTH CANTON, OHIO USA

TAAPH052K908S

Double Nut Tapered Adapter Four-Bolt Pillow Block

Every reasonable effort has been made to ensure the accuracy of the information contained in this writing, but no liability is accepted for errors, omissions or for any other reason.

FOR DISCUSSION ONLY