The Timken Company
4500 Mt Pleasant St. NW
N. Canton, OH 44720
Phone: (234) 262-3000
E-Mail: CustomerCAD@timken.com • **Web site:** www.timken.com

Part Number QAF09A111S, Single Concentric Four Bolt Square Flange Block

Specifications | Dimensions | Radial and Thrust Factors | Engineering Seal Speed | Engineering Bearing Attributes | Engineering Internal Radial Clearance

Specifications

Engineering Group	Mounted Bearing
Bearing Number	22209
Shaft Size	1 11/16 in
Shaft Size Type	Imperial
Full Timken Part Number	QAF09A111SB QAF09A111SC QAF09A111SEB QAF09A111SEC QAF09A111SEM QAF09A111SEN QAF09A111SEO QAF09A111SET QAF09A111SM QAF09A111SN QAF09A111SO

	QAF09A111ST
Locking Style	Single Concentric
Housing Construction	Four-Bolt Square Flange
UPC Code	0883450037808 0883450037815 0883450037839 0883450037846 0883450037853 0883450037860 0883450037877 0883450037884 0883450190640 0883450190800 0883450268004 0883450268165

Dimensions

Dimension BC	5.84 in 148.3 mm
Dimension C	2.63 in 66.8 mm
Dimension D	4.66 in 118.4 mm
Dimension E	4.13 in 104.9 mm
Dimension F	5.5000 in 139.700 mm
Dimension H	0.88 in 22.4 mm
Dimension J (Bolt Size)	0.5 in 12 mm
Dimension KA	1 in 25.4 mm

Dimension L Exp	3.21 in 81.5 mm
Dimension L Fix	3.13 in 79.5 mm
Dimension M	1.88 in 47.8 mm
Dimension N	2.56 in 65 mm
Dimension RA	0.25 in 6.4 mm
Dimension SA	2.88 in 73.2 mm

Radial and Thrust Factors

C0 - Static Load	24200 lbf 108000 N
C - Dynamic Load (Basic)	24500 lbf 109000 N
e - Geometry Factor	0.25
Y1 - Geometry Factor	2.71
Y2 - Geometry Factor	4.04

Engineering Seal Speed

Oil Lubrication - M/N Seal	2700 rpm
Oil Lubrication - T Seal	4500 rpm
Oil Lubrication - B/C/O Seal	1950 rpm
Grease Lubrication - M/N Seal	2700 rpm

Grease Lubrication - T Seal	4000 rpm
Grease Lubrication - B/C/O Seal	1950 rpm

Engineering Bearing Attributes

Float	0.050 in 1.270 mm
Shaft Tolerance	0.0015 in 0.038 mm

Engineering Internal Radial Clearance

Eng Internal Radial Clearance - Min	0.0016
Eng Internal Radial Clearance - Max	0.0026
Pre Install Clearance Min	0.0016 in 0.040 mm
Pre Install Clearance Max	0.0026 in 0.065 mm

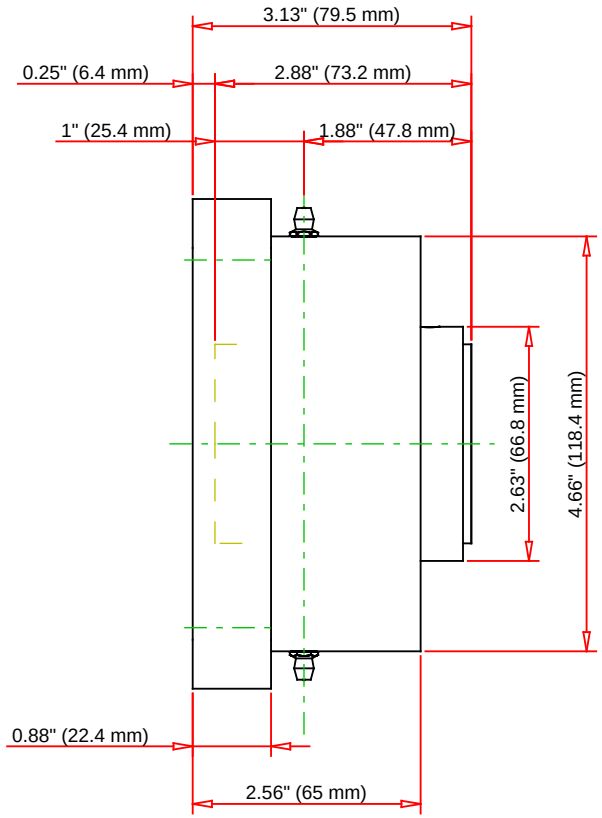

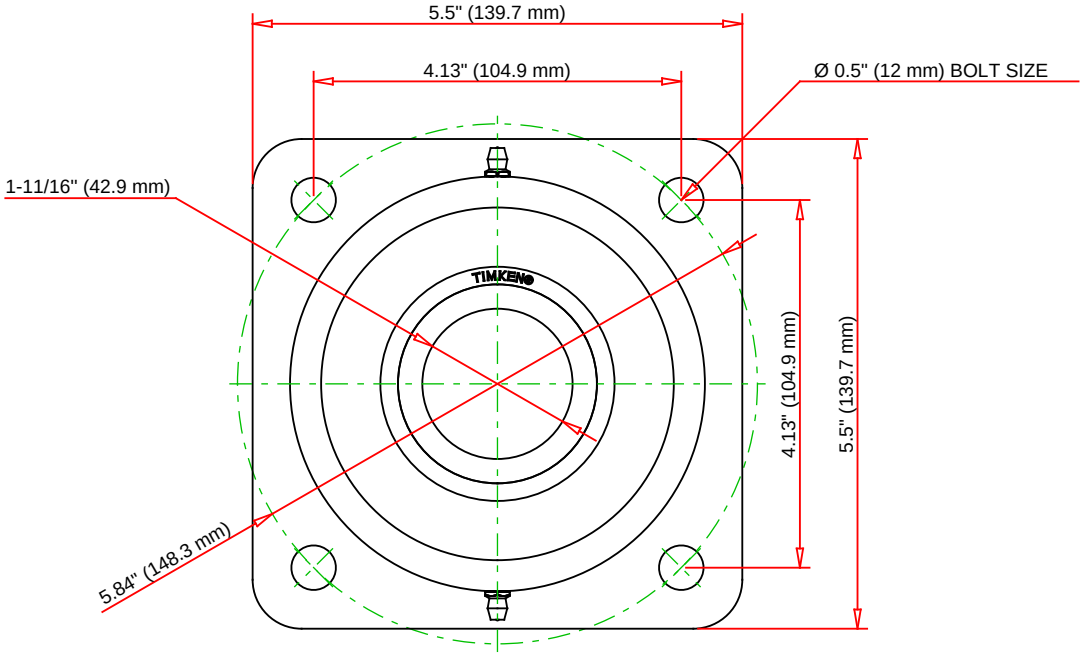

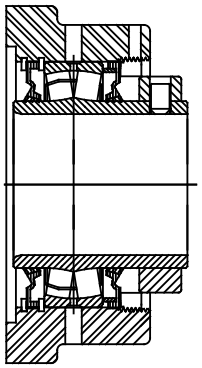

Note: Section View not to Scale

C - Dynamic Load	24500	lbf	109000	N	
C0 - Static Load	24200	lbf	108000	N	
Weight	11	lb	5	kg	
Max. Speed T-Seals & Grease	4000	rpm			
Rad. Clearance - Max.	0.0026				

TIMKEN

THE TIMKEN COMPANY
NORTH CANTON, OHIO USA

QAF09A111S

Single Concentric Four Bolt Square Flange Block

Every reasonable effort has been made to ensure the accuracy of the information contained in this writing, but no liability is accepted for errors, omissions or for any other reason.

FOR DISCUSSION ONLY