SHEET 1 | REV 1 | 52A109676 | DRAWING NO. | SIZE A

THIRD ANGLE PROJECTION

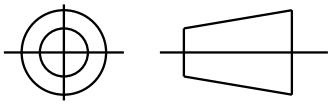

REVISIONS

REV.	DESCRIPTION	DATE	APPROVED
1	CHG TO RBC FORMAT PER IS05-1777	03/23/06	SUDHA

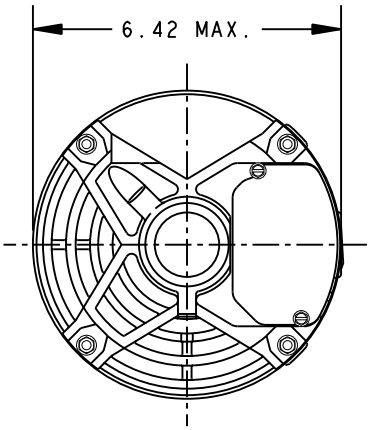

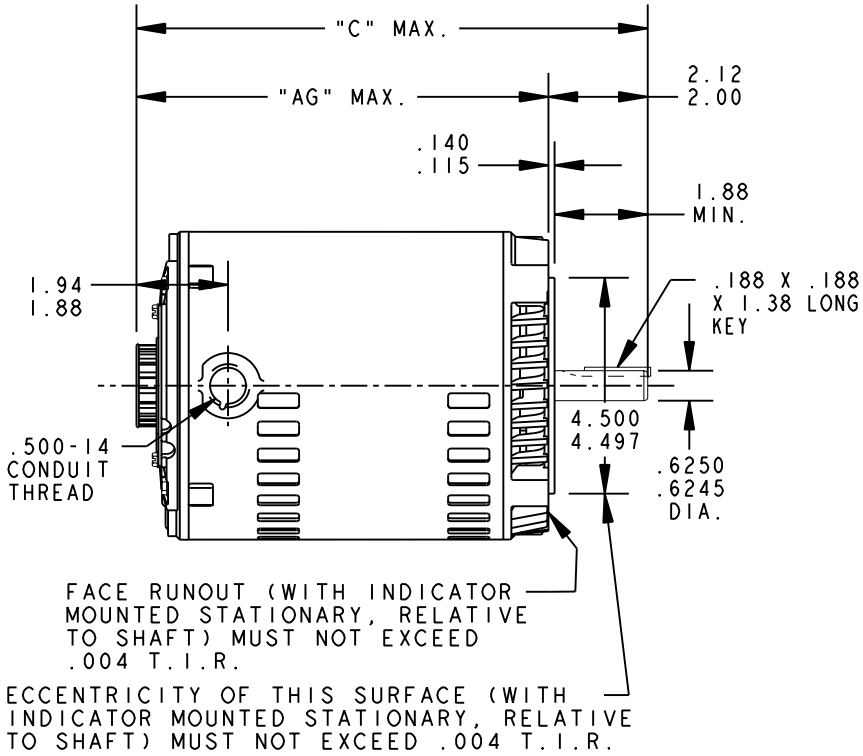

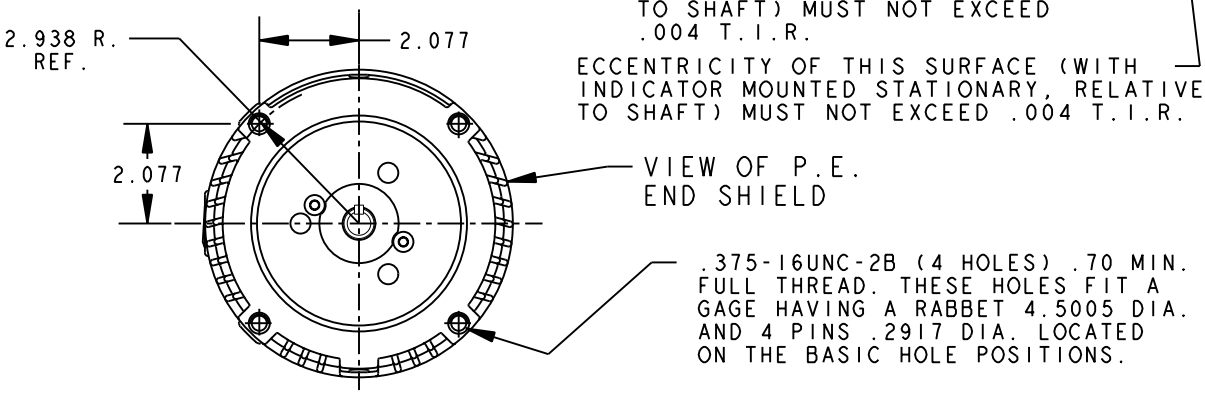

P	TYPE	GE SIZE	NEMA FR.	"C"	"AG"			MIN. SHELL
1	K	42	56C	9.90	7.19			5.72

SIGNATURES		DATE
MODEL	M.D.PAPE	09/02/94
DETAIL	.	.
CHECKED	.	.
ENGRG	.	.
MFG	.	.
QUALITY	.	.
ISSUED	M.D.PAPE	09/02/94

SOLID MODEL: 52A109676

FOR ADDITIONAL INFO REFER TO:
APPLIED PRACTICES .
DIMENSIONS ARE IN INCHES
MATERIAL .

REGAL BELOIT

REGAL-BELOIT CORPORATION

TITLE

OUTLINE

GENERAL PURPOSE MOTOR DRIP PROOF - BALL BEARING R2 END MOUNTED FMF - 5K42UN4127

SIZE A | DRAWING 52A109676 | REV 1

SCALE: 0.250 | REF. No: . | SHEET 1 OF 1