SHEET 1 | REV 10 | 52A107739 | SIZE A | DRAWING NO.

THIRD ANGLE PROJECTION

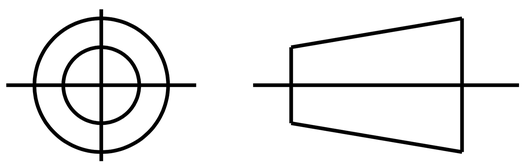

REVISIONS

REV.	DESCRIPTION	DATE	APPROVED
9	ADDED PT#8 PER PROD. 1S11-5707	12/05/11	KARTHIK
10	ADDED PT#9 PER SAMPLE DS12-5331	12/15/12	RAJESH

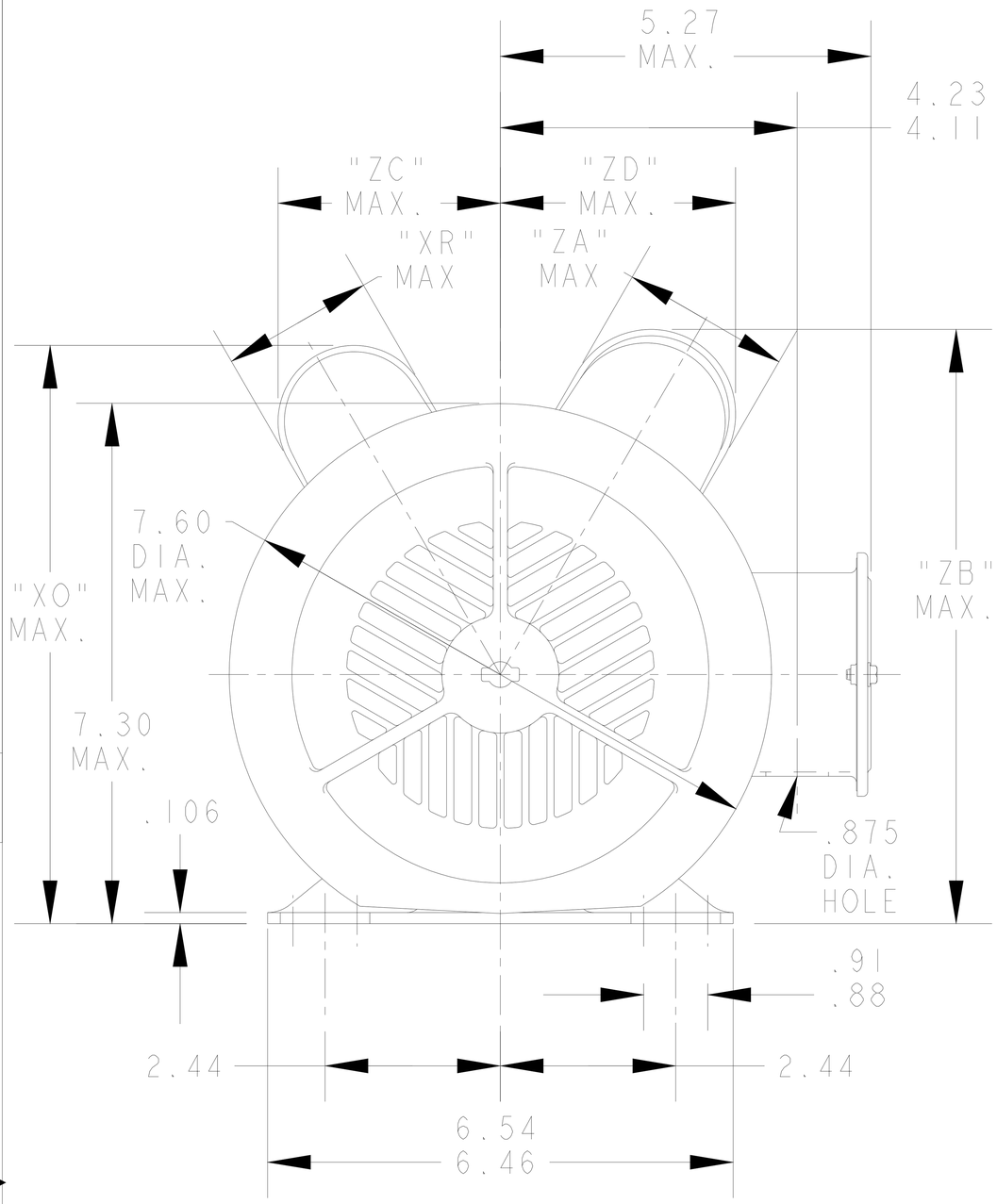

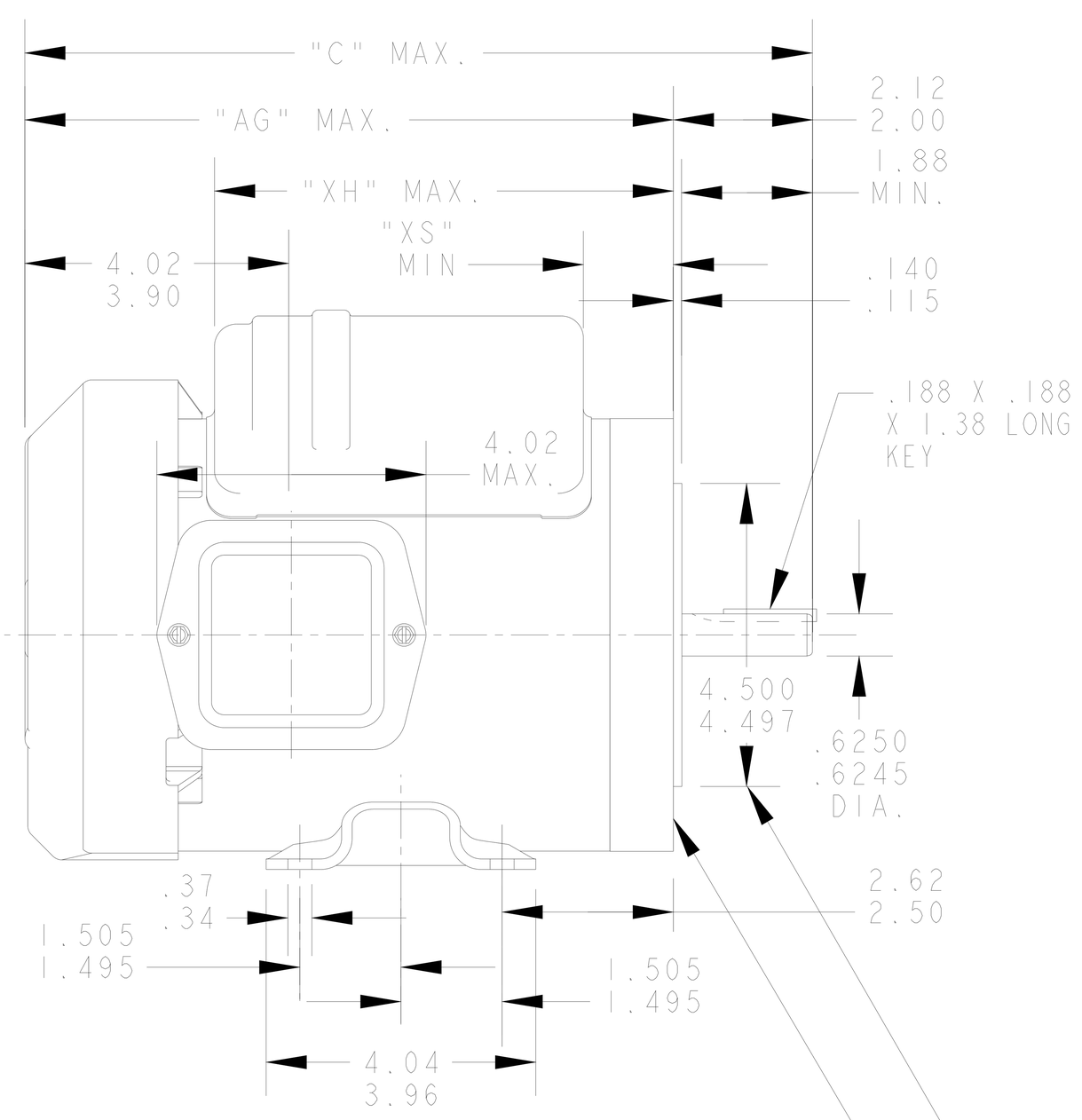

FACE RUNOUT (WITH INDICATOR MOUNTED STATIONARY, RELATIVE TO SHAFT) MUST NOT EXCEED .004 T.I.R.

ECCENTRICITY OF THIS SURFACE (WITH INDICATOR MOUNTED STATIONARY, RELATIVE TO SHAFT) MUST NOT EXCEED .004 T.I.R.

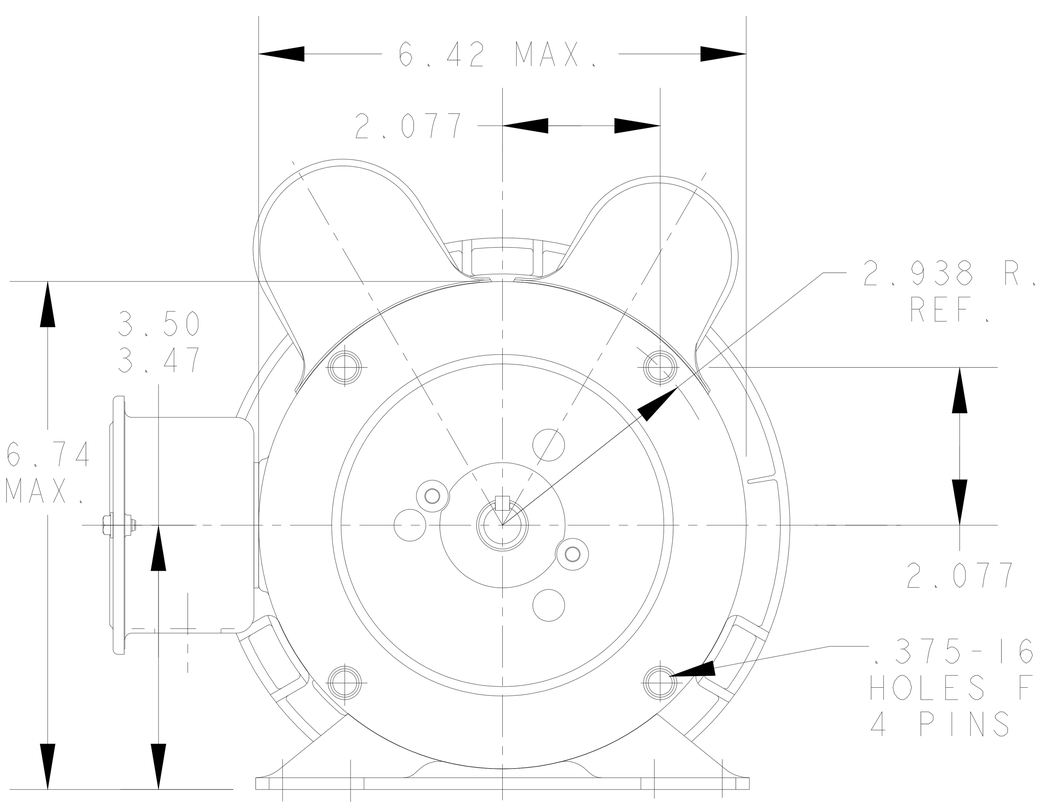

.375-16UNC-2B (4 HOLES) .70 MIN. FULL THREAD. THESE HOLES FIT A GAGE HAVING A RABBET 4.5005 DIA. AND 4 PINS .2917 DIA. LOCATED ON THE BASIC HOLE POSITIONS.

VIEW OF P.E. END SHIELD

ALL DIMENSIONS ARE IN INCHES

SIGNATURES		DATE
MODEL	M.D.PAPE	10/15/91
DETAIL	.	.
CHECKED	.	.
ENGRG	.	.
MFG	.	.
QUALITY	.	.
ISSUED	M.D.PAPE	11/13/98
SOLID MODEL: 52A107739		

FOR ADDITIONAL INFO REFER TO:
APPLIED PRACTICES .
DIMENSIONS ARE IN INCHES ✓
MATERIAL .

REGAL BELOIT

REGAL-BELOIT CORPORATION

TITLE

OUTLINE

GENERAL PURPOSE MOTOR TEFC - BALL BEARING

- WELDED BASE R2 END MOUNTED FMF - 40 FRAME REDESIGN (5KCR46MN0055X)

SIZE	DRAWING	REV
A	52A107739	10

SCALE: 0.250 | REF. No: . | SHEET 1 OF 2

SHEET 2 | REV 10 | 52A107739 | DRAWING NO. | SIZE A

THIRD ANGLE PROJECTION

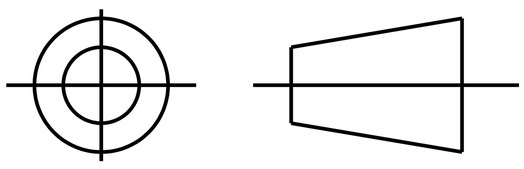

REVISIONS

REV.	DESCRIPTION	DATE	APPROVED
9	ADDED PT#8 PER PROD. 1S11-5707	12/05/11	KARTHIK
10	ADDED PT#9 PER SAMPLE DS12-5331	12/15/12	RAJESH

P	TYPE	GE SIZE	NEMA FR.	"C"	"AG"	"XH"	"XO"	"XR"	"XS"	"ZA"	"ZB"	"ZC"	"ZD"	MIN. SHELL
9	KCR	49	56CY	12.97	10.85	7.50	8.33	2.33	1.98	2.33	8.14	3.30	3.60	7.68
8	KCR	49	56CY	12.97	10.85	7.61	8.40	2.40	1.86	2.72	8.77	3.20	3.66	7.68
7	KCR	49	56C	14.28	12.16	8.17	8.40	2.40	2.35	2.40	8.40	3.38	3.38	8.99
6	KCR	48	56C	13.72	11.60	7.61	8.40	2.40	1.79	2.40	8.40	3.38	3.38	8.43
5	KC	49	56CY	12.44	10.32	7.54	8.18	2.15	1.79	1.60	7.72	3.20	2.97	7.15
4	KC	46	56CY	11.84	9.72	6.94	8.18	2.15	1.19	1.60	7.72	3.20	2.97	6.55
3	KCR	49	56CY	12.97	10.85	7.61	8.18	2.15	1.86	2.72	8.77	3.20	3.66	7.68
2	KCR	49	56CY	12.44	10.32	7.54	8.18	2.15	1.79	2.40	8.40	3.20	3.38	7.15
1	KCR	46	56CY	11.84	9.72	6.94	8.18	2.15	1.19	2.40	8.40	3.20	3.38	6.55

SIGNATURES		DATE
MODEL	M.D.PAPE	10/15/91
DETAIL	.	.
CHECKED	.	.
ENGRG	.	.
MFG	.	.
QUALITY	.	.
ISSUED	M.D.PAPE	11/13/98

SOLID MODEL: 52A107739

FOR ADDITIONAL INFO REFER TO:
APPLIED PRACTICES .
DIMENSIONS ARE IN INCHES ✓
MATERIAL .

REGAL BELOIT

REGAL-BELOIT CORPORATION

TITLE

OUTLINE

GENERAL PURPOSE MOTOR TEFC - BALL BEARING

- WELDED BASE R2 END MOUNTED FMF - 40 FRAME REDESIGN (5KCR46MN0055X)

SIZE A | DRAWING 52A107739 | REV 10

SCALE: 0.250 | REF. No: . | SHEET 2 OF 2