PART#: RSC202408NKSS
(DATA SUBJECT TO CHANGE WITHOUT NOTICE)

THIS DRAWING IS PROPERTY OF HUBBELL INC. WIEGMANN
ALL INFORMATION IS PROPRIETARY AND NOT TO BE DUPLICATED

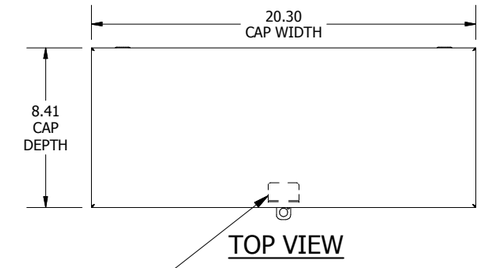

TOP VIEW

LID BRACKET
WELDED TO CAP

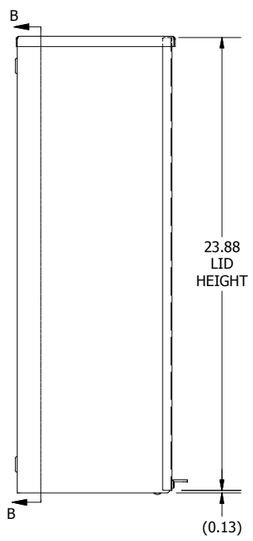

LEFT SIDE VIEW

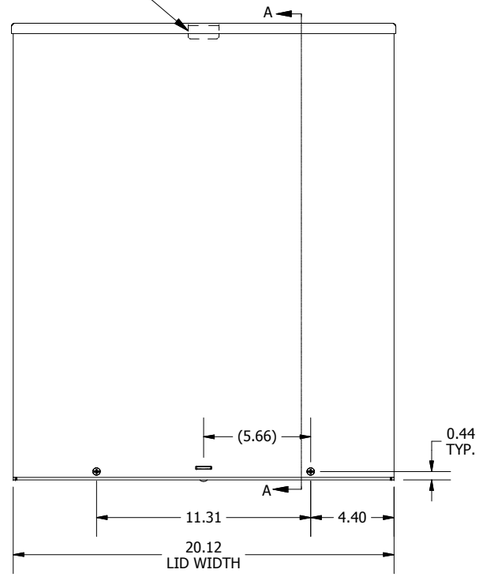

FRONT VIEW

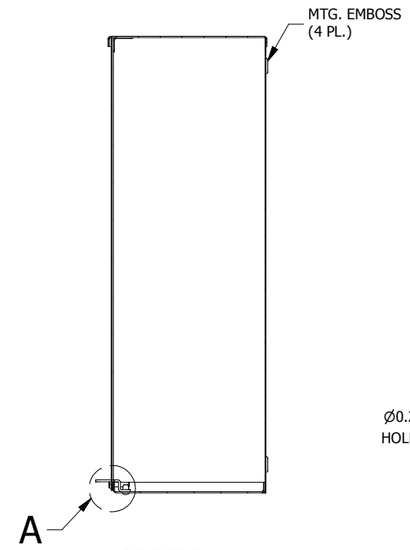

SECTION A-A
(INSIDE LEFT OF ENCL.)

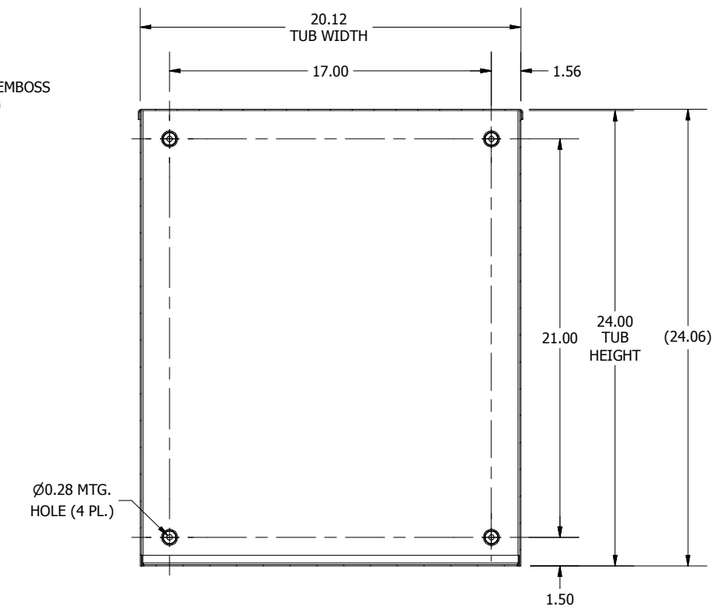

SECTION B-B
(INSIDE BACK OF ENCL.)

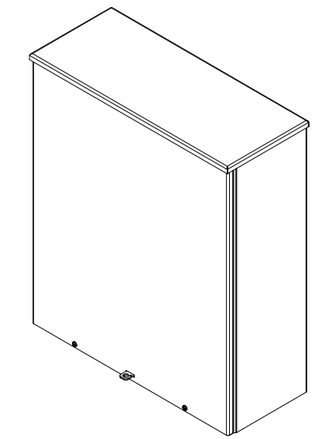

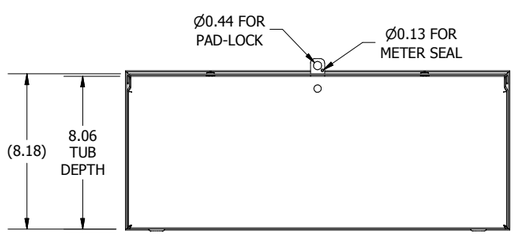

BOTTOM VIEW

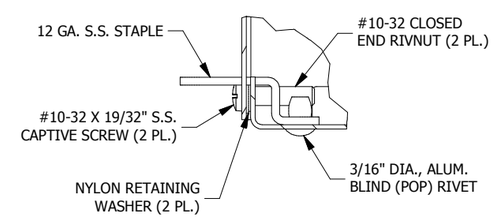
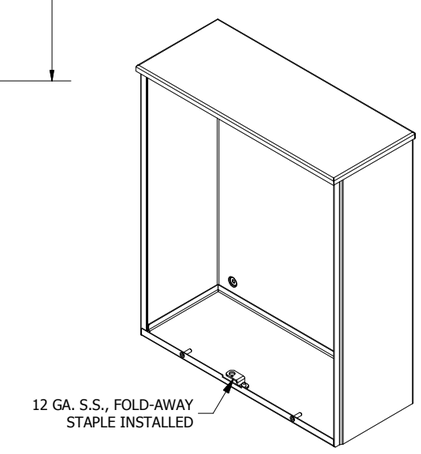
DETAIL A
(STAPLE & SCREW DETAIL)