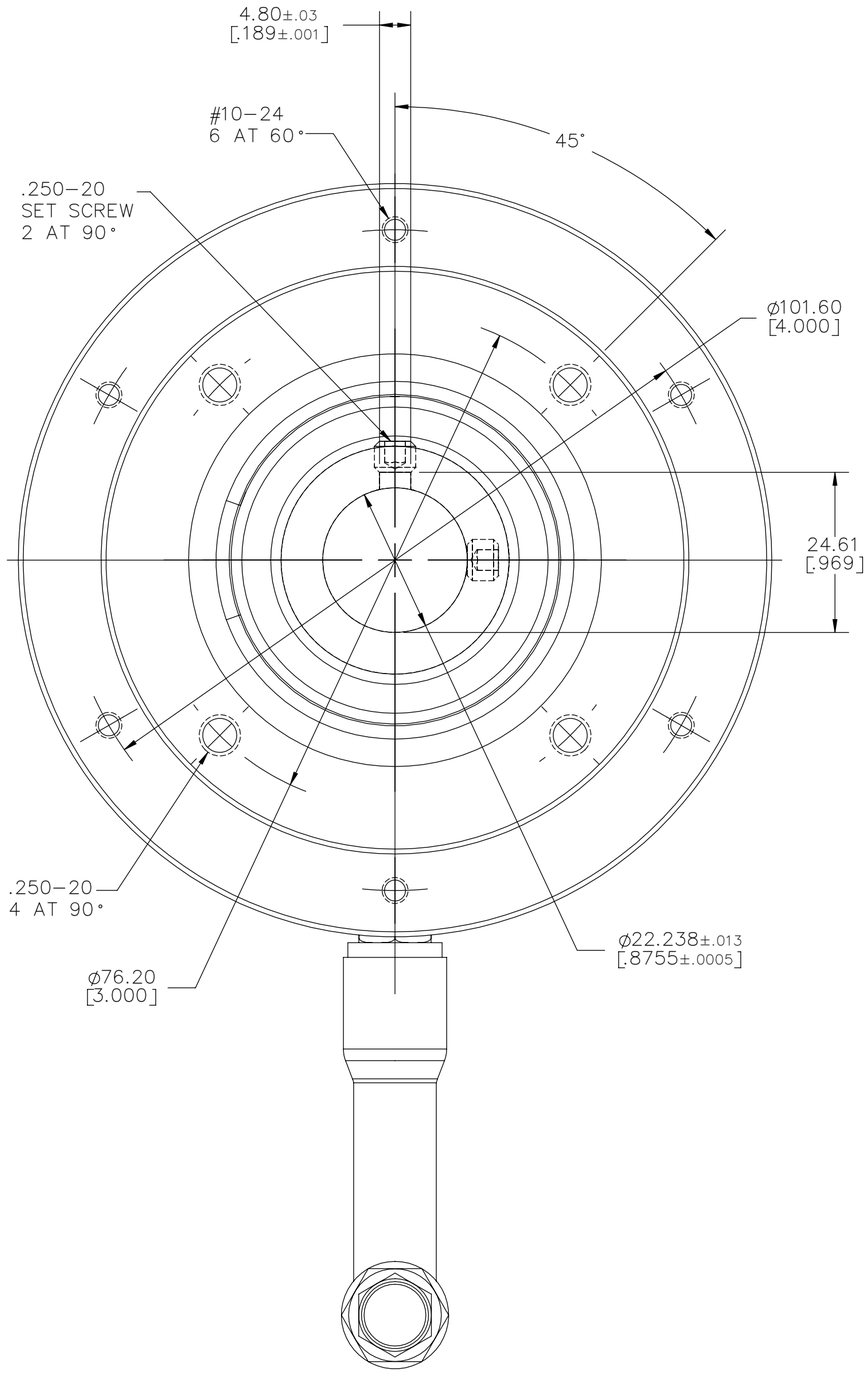

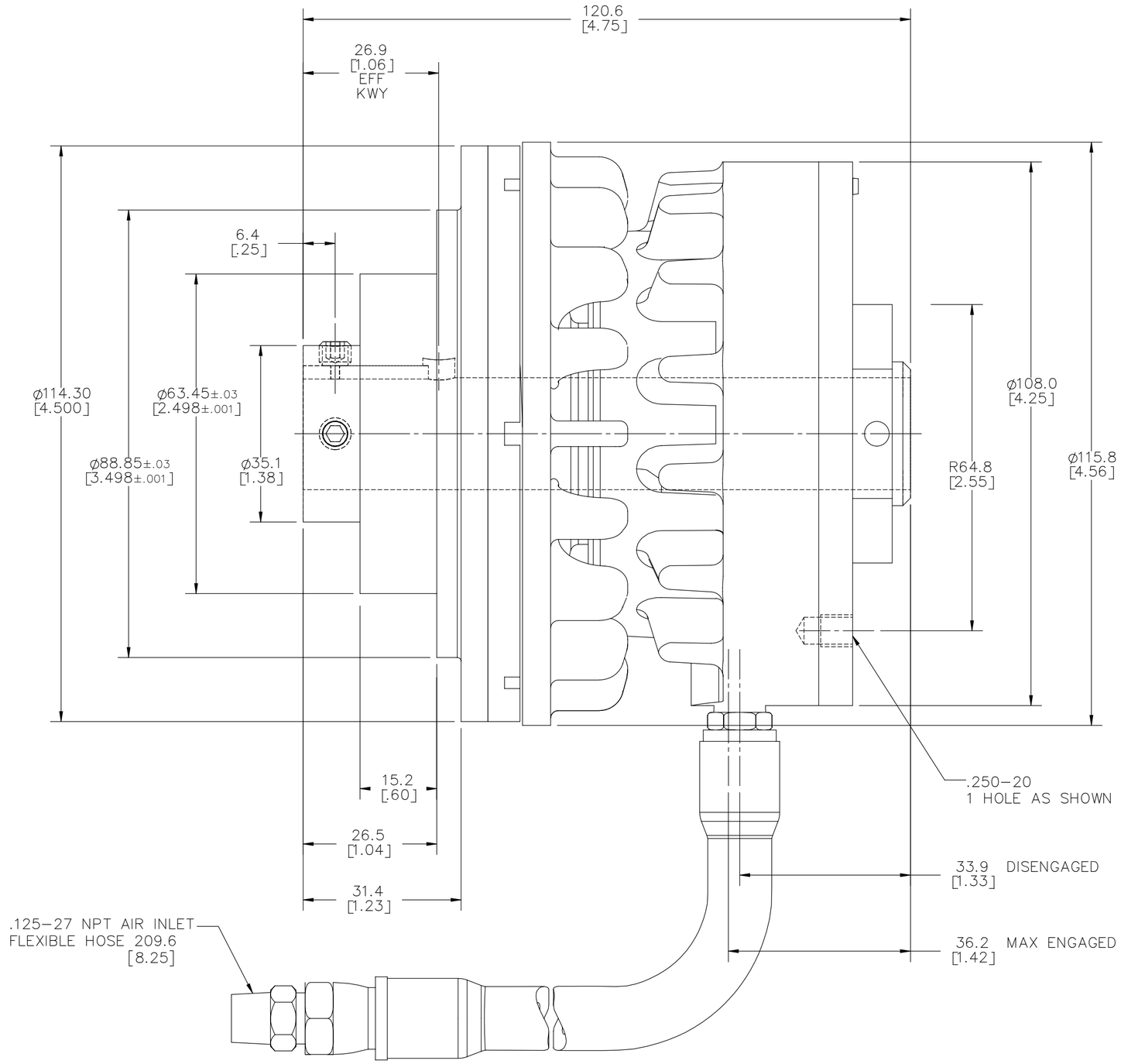

C–802851S

GEOMETRIC TOLERANCE VALUES	
MM	INCH
.013	.0005
.03	.001
.05	.002
.08	.003
.13	.005
.20	.008
.25	.010
.38	.015

THIRD ANGLE PROJECTION

SURFACE ROUGHNESS VALUES	
µm	µin
6.3	250
3.2	125
1.6	63
0.8	32
0.4	16
0.2	8

UNLESS OTHERWISE SPECIFIED

1. METRIC TOLERANCES: X ±0.8; .X ±0.5; .XX ±0.13
   INCH TOLERANCES: .XX ±.02; .XXX ±.005
2. ANGLES ±.5°
3. PRIMARY DIMENSIONS ARE IN MM
   SECONDARY DIMENSIONS ARE IN INCHES
4. DO NOT SCALE DWG – WORK TO DIMS
5. PRODUCT MUST CONFORM TO ENGINEERING STANDARD WORK INSTRUCTIONS

nexen® Nexen Group, Inc.

TITLE GENERAL DIMENSIONS

MODEL F–450*0.875,PILOT MOUNT,LCO

ERO	ECO	DATE
	20033	3/21/2013

DWN	TRW	DATE	3/12/2012	SCALE: 3:2 [X]	SHEET 1 OF 1
CHKD	TGH	DATE	3/12/2012	C–802851S	REV B
APVD	CDV	DATE	3/12/2012		