Uncontrolled Copy

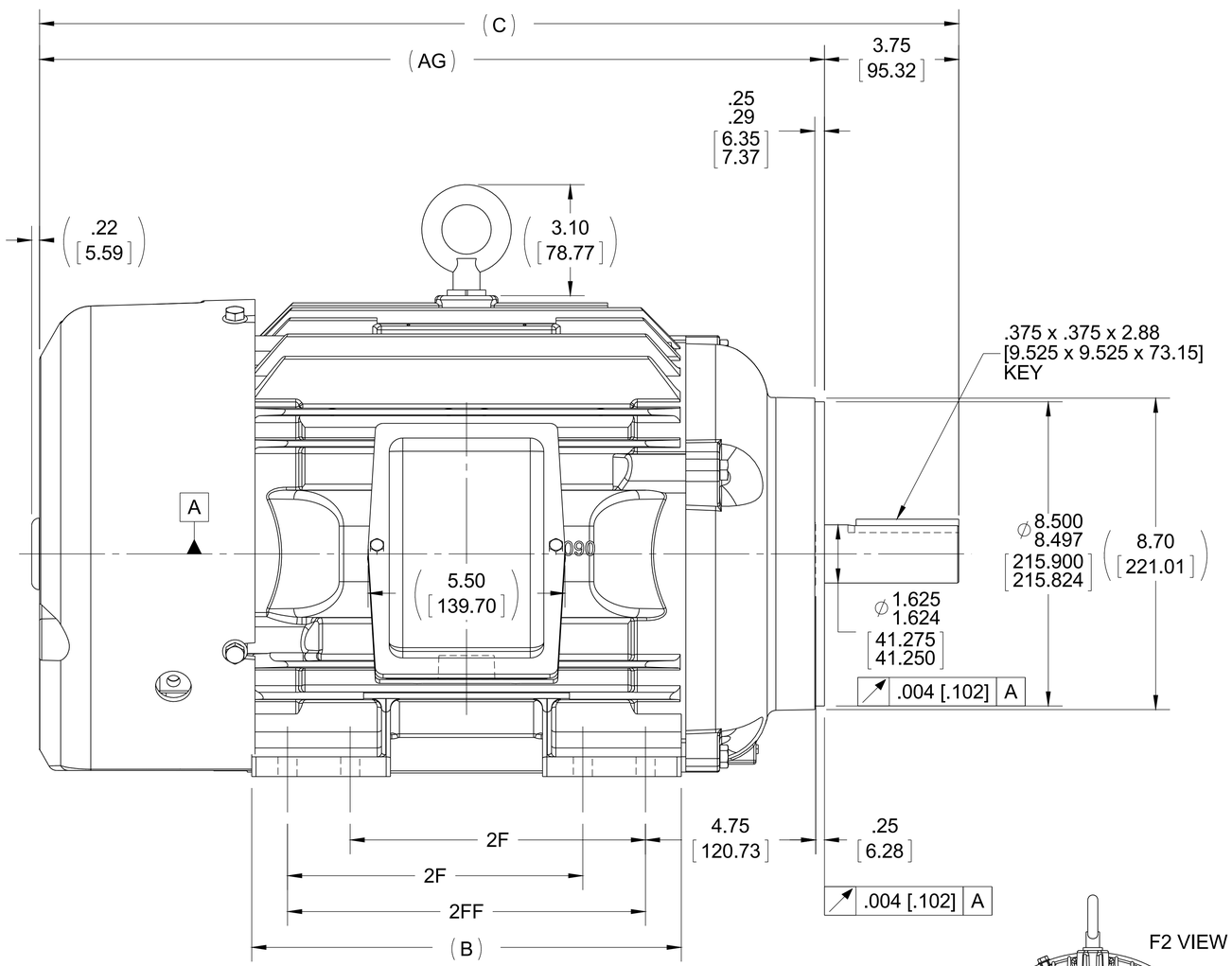

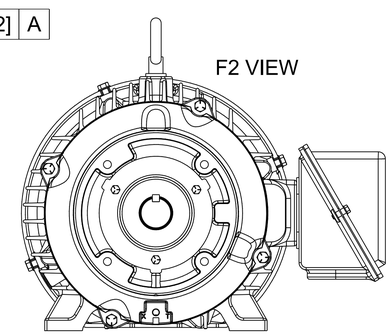

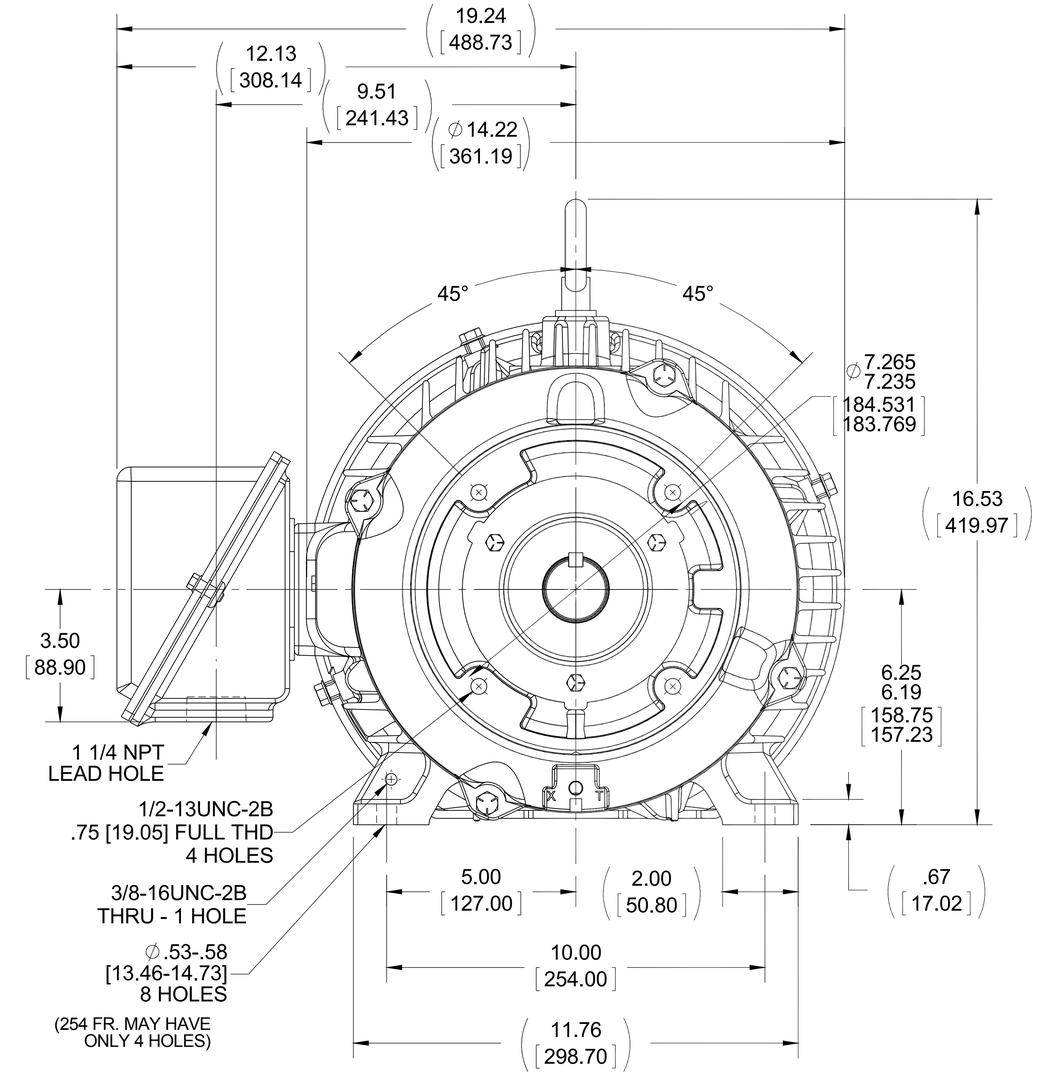

NOTES:
1. CONDUIT BOX CAN BE ROTATED IN 90° STEPS.
2. CONDUIT BOX CAN BE MOUNTED ON OPPOSITE SIDE BY REMOVING BRACKETS AND TURNING FRAME 180°. (NOT FIELD MODIFIFIABLE ON PMAC MOTORS)
3. NAMEPLATES TO BE READ FROM CONDUIT BOX SIDE OF MOTOR.

DASH	FRAME	B	C	AG	2F	2FF	BS
1050	254TC	10.25 [260.35]	23.93 [607.82]	20.18 [512.57]	8.25 [209.55]		4.12 [104.65]
1225	254/256TC	12.00 [304.80]	25.68 [652.27]	21.93 [557.02]	8.25 [209.55]	10.00 [254.00]	5.00 [127.00]

DRAWING REVISION	REVISION BY	DATE
G	JHA	10-21-2015
ECO: ECO-0087068	APPROVED BY: TDB	DATE: 10-22-2015

ECO DESCRIPTION: UPDATED TO CURRENT STANDARDS

COPYRIGHT REGAL BELOIT AMERICA, INC. ALL RIGHTS RESERVED.
PROPRIETARY AND CONFIDENTIAL INFORMATION - THIS DOCUMENT IS THE PROPERTY OF REGAL BELOIT AMERICA, INC. ("OWNER") AND CONTAINS OWNER'S PROPRIETARY INFORMATION. ANY PERSON, CORPORATION OR OTHER FIRM RECEIVING IT IS DEEMED, BY RECEIVING IT, TO AGREE THAT IT, AND/OR ANY PART OF IT, SHALL NOT BE DISCLOSED TO ANY PERSON, CORPORATION OR OTHER ENTITY, DUPLICATED, AND/OR USED, EXCEPT AS EXPRESSLY APPROVED IN WRITING IN ADVANCE BY OWNER. THIS DOCUMENT SHALL BE RETURNED TO OWNER UPON REQUEST. IT MAY BE SUBJECT TO CERTAIN RESTRICTIONS UNDER APPLICABLE EXPORT CONTROL LAWS AND REGULATIONS.

TOLERANCES UNLESS OTHERWISE SPECIFIED:

DEC.	INCH	mm	ANGLE
.X	±0.1	[±2.5]	±7' 30"
.XX	±0.03	[±0.76]	
.XXX	±0.005	[±0.127]	
.XXXX	±0.0005	[±0.0127]	

REMOVE BURRS & BREAK SHARP EDGES: .003/.015 [.076/.381] X 45°
CORNER FILLETS: R.02 [.51]
MACHINED SURFACES: 200 INCH / 5.1 mm
mm SHOWN IN [BRACKETS]

DRAWN BY	PKG
DATE	09-03-1996
APPROVED BY	BW
DATE	09-06-1996
REFERENCE	
THIRD ANGLE PROJECTION	

Regal Beloit America, Inc.

DESCRIPTION: OUTLINE
250TC FR - TEFC - BB - TS - C'FACE - TFNA - CAST C'BOX

MATERIAL | PROCESS/FINISH

SIZE: B | DRAWING NUMBER: SS203152 | SHEET: 1 OF 1