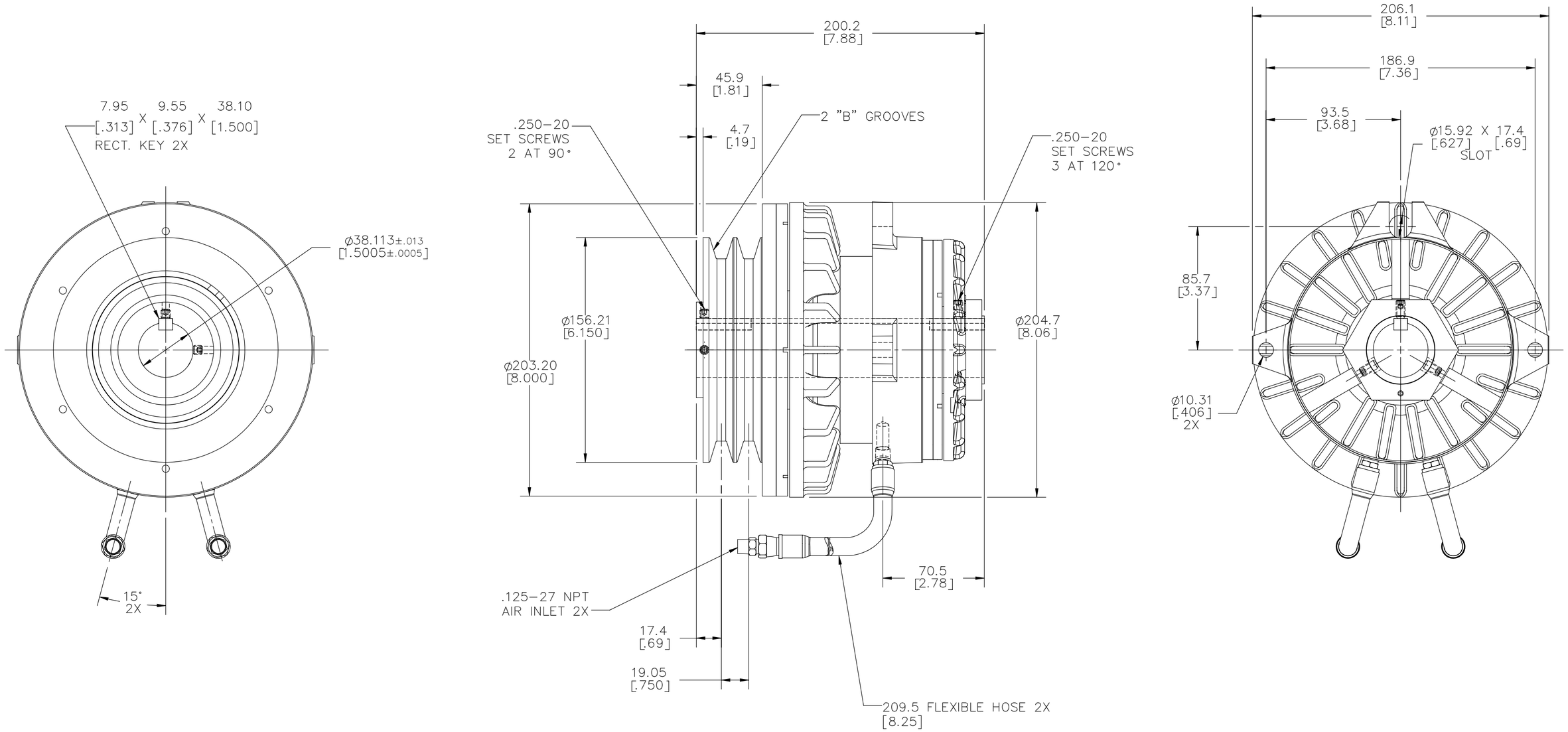

C-830600S

GEOMETRIC TOLERANCE VALUES	
MM	INCH
.013	.0005
.03	.001
.05	.002
.08	.003
.13	.005
.20	.008
.25	.010
.38	.015

THIRD ANGLE PROJECTION

SURFACE ROUGHNESS VALUES	
µm	µin
6.3	250
3.2	125
1.6	63
0.8	32
0.4	16
0.2	8

UNLESS OTHERWISE SPECIFIED

1. METRIC TOLERANCES: X ±0.8; .X ±0.5; .XX ±0.13
   INCH TOLERANCES: .XX ±.02; .XXX ±.005
2. ANGLES ±.5°
3. PRIMARY DIMENSIONS ARE IN MM SECONDARY DIMENSIONS ARE IN INCHES
4. DO NOT SCALE DWG – WORK TO DIMS
5. PRODUCT MUST CONFORM TO ENGINEERING STANDARD WORK INSTRUCTIONS

nexen® Nexen Group, Inc.

TITLE GENERAL DIMENSIONS

MODEL MWCB*1.500,2'B' GRV,05.80 PD

				ERO	ECO	DATE
					19677	9/19/2011
DWN	TGH	DATE	9/19/2011	SCALE: 1:2 [X]		SHEET 1 OF 1
CHKD	TRW	DATE	9/19/2011	C-830600S		REV C
APVD	CDV	DATE	9/19/2011			