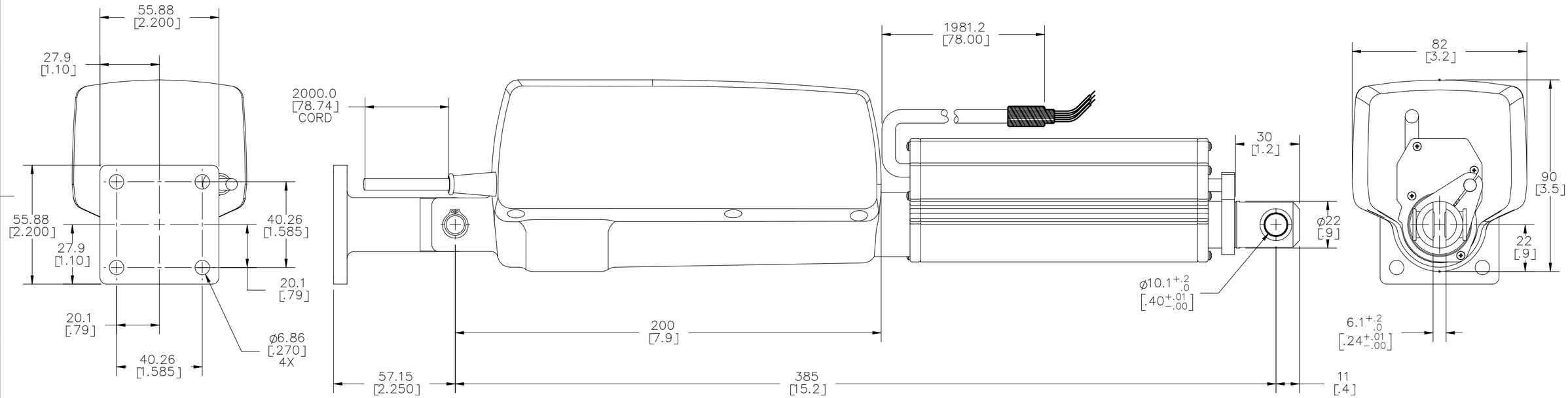

C-912730S

MAX THRUST LBS	SELF-LOCKING AT MAX LBS	MAX SPEED IN/SEC	STD STROKE IN INCHES	CURRENT RQMT MAX 24 V DC
600	600	.35	3.94	4.5 A

FEATURES

24 V DC PERMANENT MAGNET MOTOR
QUIET OPERATION
WEATHER RESISTANT CONSTRUCTION
THRUST TUBE MADE OF STAINLESS STEEL
COMPACT DESIGN
SURFACE TREATMENT WITH ALKYD VARNISH(BLACK)
CONSTRUCTED FOR INTERMITTENT OPERATION
PROTECTION CLASS: IP 51
AMBIENT TEMPERATURE: +41°F TO +104°F

GEOMETRIC TOLERANCE VALUES

MM	INCH
.013	.0005
.03	.001
.05	.002
.08	.003
.13	.005
.20	.008
.25	.010
.38	.015

THIRD ANGLE PROJECTION

SURFACE ROUGHNESS VALUES

µm	µin
6.3	250
3.2	125
1.6	63
0.8	32
0.4	16
0.2	8

UNLESS OTHERWISE SPECIFIED
1. METRIC TOLERANCES: X ±0.8; .X ±0.5; .XX ±0.13
   INCH TOLERANCES: .XX ±.02; .XXX ±.005
2. ANGLES ±.5°
3. PRIMARY DIMENSIONS ARE IN MM
   SECONDARY DIMENSIONS ARE IN INCHES
4. DO NOT SCALE DWG – WORK TO DIMS
5. PRODUCT MUST CONFORM TO ENGINEERING STANDARD WORK INSTRUCTIONS

nexen® Nexen Group, Inc.

TITLE GENERAL DIMENSIONS

MODEL ACTUATOR,LINEAR,600 LBF,4IN

			41099	19916	8/24/2012
			ERO	ECO	DATE
DWN	CDV	DATE 8/23/2012	SCALE: 3:4 [X]		SHEET 1 OF 1
CHKD	TGH	DATE 8/23/2012	C-912730S		REV C
APVD	DRB	DATE 8/24/2012			