- SV-iS7 is the official name for the iS7 series inverters.
- This operation manual is intended for users with basic knowledge of electricity and electric devices.
- Keep this manual near the product for future reference whenever setting change, maintenance or service is required.
- Ensure that the field operators and service engineers can easily access this manual.
- For detailed information about the optional extension boards, including the specifications and the requirements for installation and operation, refer to the instruction manuals that are supplied with the products.

Safety Information

Read and follow all safety instructions in this manual precisely to avoid unsafe operating conditions, property damage, personal injury, or death.

Safety symbols in this manual

⚠ Danger

Indicates an imminently hazardous situation which, if not avoided, will result in severe injury or death.

⚠ Warning

Indicates a potentially hazardous situation which, if not avoided, could result in injury or death.

ⓘ Caution

Indicates a potentially hazardous situation which, if not avoided, could result in minor injury or property damage.

Safety information

⚠ Danger

- Do not open the cover of the equipment while it is on or operating. Likewise, do not operate the inverter while the cover is open. Exposure of the high voltage terminals or the charging area to the external environment may result in an electric shock. Do not remove any covers or touch the internal circuit boards (PCBs) or electrical contacts on the product when the power is on or during operation. Doing so may result in serious injury, death, or serious property damage.
- Do not open the cover of the equipment, even when the power supply to the inverter has been turned off, unless it is necessary for maintenance or regular inspection. Opening the cover may result in an electric shock even when the power supply is off.
- The equipment may hold a charge long after the power supply has been turned off. Use a multi-meter to make sure that the remaining voltage is below 30 VDC before working on the inverter, motor, or motor cable.

⚠ Warning

- This equipment must be grounded for safe and proper operation.
- Do not supply power to a faulty inverter. If you find that the inverter is faulty, disconnect the power supply and have the inverter professionally repaired.
- The inverter becomes hot during operation. Avoid touching the inverter until it has cooled to avoid burns.
- Do not allow foreign objects, such as screws, metal chips, debris, water, or oil, to get inside the inverter. Allowing foreign objects inside the inverter may cause the inverter to malfunction or result in a fire.
- Do not operate the inverter with wet hands. Doing so may result in electric shock.

ⓘ Caution

- Do not modify the interior workings of the inverter. Doing so will void the warranty.
- Do not use cables with damages or cracks on the protective insulation when wiring the inverter. Damaged insulation may cause misoperation, an electric shock or a fire.
- Do not place heavy objects on top of electric cables. Doing so may damage the cable and result in an electric shock.

Note

[English]
The maximum allowed prospective short-circuit current at the input power connection is defined in IEC 60439-1 as 100 kA. The drive is suitable for use in a circuit capable of delivering not more than 100 kA RMS at the drive's maximum rated voltage, depending on the selected MCCB. RMS symmetrical amperes for recommended MCCB are the following table.

[French]
Le courant maximum de court-circuit présumé autorisé au connecteur d'alimentation électrique est défini dans la norme IEC 60439-1 comme égal à 100 kA. L'entraînement convient pour une utilisation dans un circuit capable de délivrer pas plus de 100 kA RMS à la tension nominale maximale de l'entraînement. Le tableau suivant indique le MCCB recommandé selon le courant RMS symétrique en ampères.

Working Voltage	UTE100 (E/N)	UTS150 (N/H/L)	UTS250 (N/H/L)	UTS400 (N/H/L)
240V(50/60Hz)	50/65kA	65/100/150kA	65/100/150kA	65/100/150kA
480V(50/60Hz)	25/35kA	35/65/100kA	35/65/100kA	35/65/100kA

Working Voltage	ABS33c	ABS53c	ABS63c	ABS103c	ABS203c	ABS403c
240V(50/60Hz)	30kA	35kA	35kA	85kA	85kA	75kA
480V(50/60Hz)	7.5kA	10kA	10kA	26kA	26kA	35kA

Table of Contents

1 About the Product

This chapter provides details on product identification and part names. To install the inverter correctly and safely, carefully read and follow the instructions.

1.1 Preparing for Installation and Operation

1.1.1 Identifying the Product

Check the product name, open the packaging, and then confirm that the product is free from defects. Contact your supplier if you have any issues or questions about your product.

The iS7 inverter is manufactured in a range of product groups based on drive capacity and power source specifications. The product name and specifications are detailed on the rating plate. Check the rating plate before installing the product and make sure that the product meets your requirements.

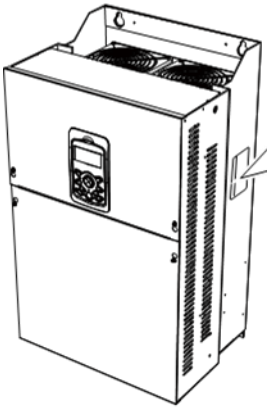

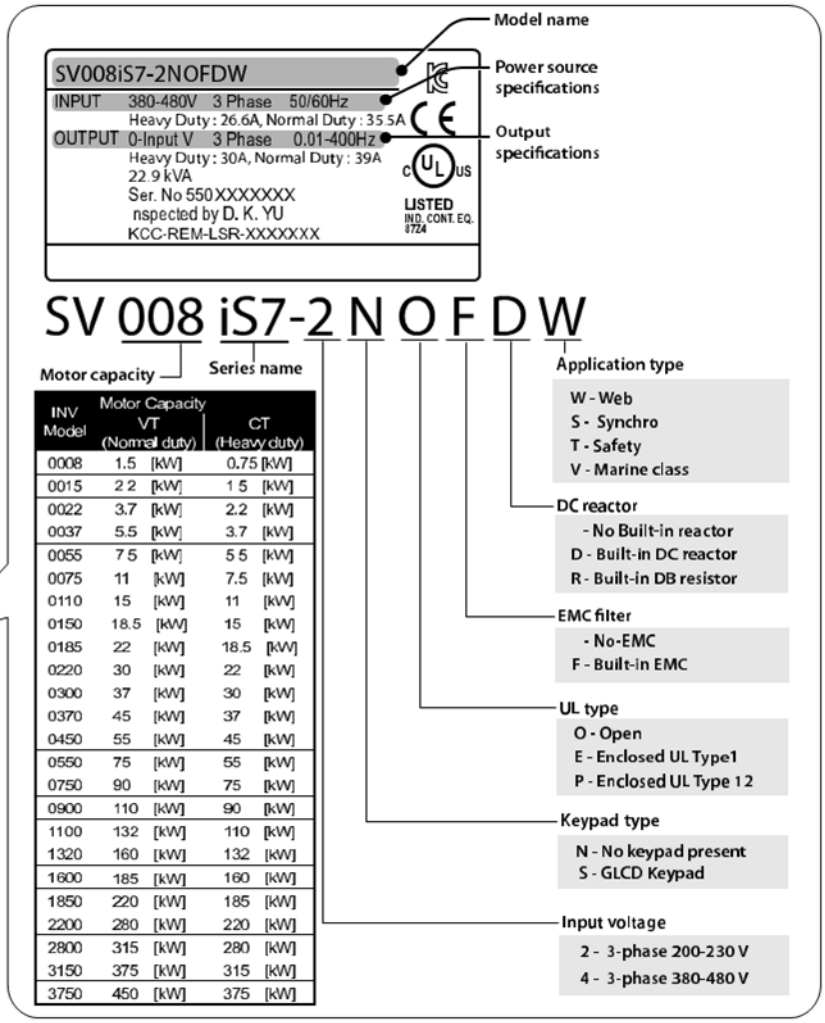

INV Model	Motor Capacity VT (Normal duty)	CT (Heavy duty)
0008	1.5 [kW]	0.75 [kW]
0015	2.2 [kW]	1.5 [kW]
0022	3.7 [kW]	2.2 [kW]
0037	5.5 [kW]	3.7 [kW]
0055	7.5 [kW]	5.5 [kW]
0075	11 [kW]	7.5 [kW]
0110	15 [kW]	11 [kW]
0150	18.5 [kW]	15 [kW]
0185	22 [kW]	18.5 [kW]
0220	30 [kW]	22 [kW]
0300	37 [kW]	30 [kW]
0370	45 [kW]	37 [kW]
0450	55 [kW]	45 [kW]
0550	75 [kW]	55 [kW]
0750	90 [kW]	75 [kW]
0900	110 [kW]	90 [kW]
1100	132 [kW]	110 [kW]
1320	160 [kW]	132 [kW]
1600	185 [kW]	160 [kW]
1850	220 [kW]	185 [kW]
2200	280 [kW]	220 [kW]
2800	315 [kW]	280 [kW]
3150	375 [kW]	315 [kW]
3750	450 [kW]	375 [kW]

Note1) Optional conduit parts are available for the Enclosed UL Type 1 models (0.75–75 kW products).

Note2) Built-in DB resistor is available only for the Web application models (0.75–3.7 kW products).

Note3) To use safety function, please buy 0.75-160kW product including safety option. However 185-375kW product users have to buy safety option and apply to standard products because safety option is not included.

1.1.2 Checking the Product for Defects or Damage

If you suspect that the product has been mishandled or damaged in any way, contact the LSELECTRIC Customer Support center with the phone numbers listed on the back cover of this manual.

1.1.3 Preparing the Product for Installation and Operation

Preparation steps for installation and operation may slightly vary by product type and application. Refer to the manual and prepare the product accordingly.

1.1.4 Installing the Product

Refer to the installation section of this manual and install the product correctly considering the installation and operating conditions at the installation location, such as installation clearances, to prevent premature deterioration or performance loss.

1.1.5 Connecting the Cables

Connect the power input/output and signal cables to the terminal block according to the instructions provided in this manual. Ensure that all the cables are connected correctly before supplying power to the product. Incorrect cable connections may damage the product.

1.2 Part Names

The illustration below displays part names. Details may vary between product groups.

1.2.1 Interior and Exterior View (IP 21 Model Types Less than 22 kW [200 V] / Less than 75 kW [400 V])

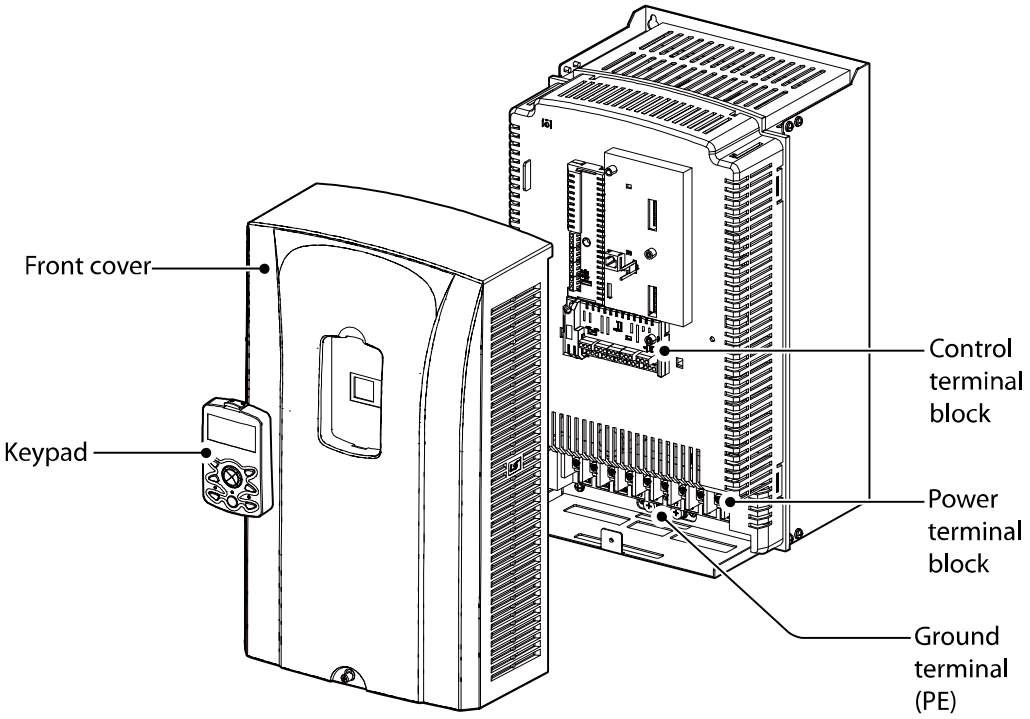

1.2.2 Interior and Exterior View (IP 54 Model Types Less than 22 kW [200/400 V])

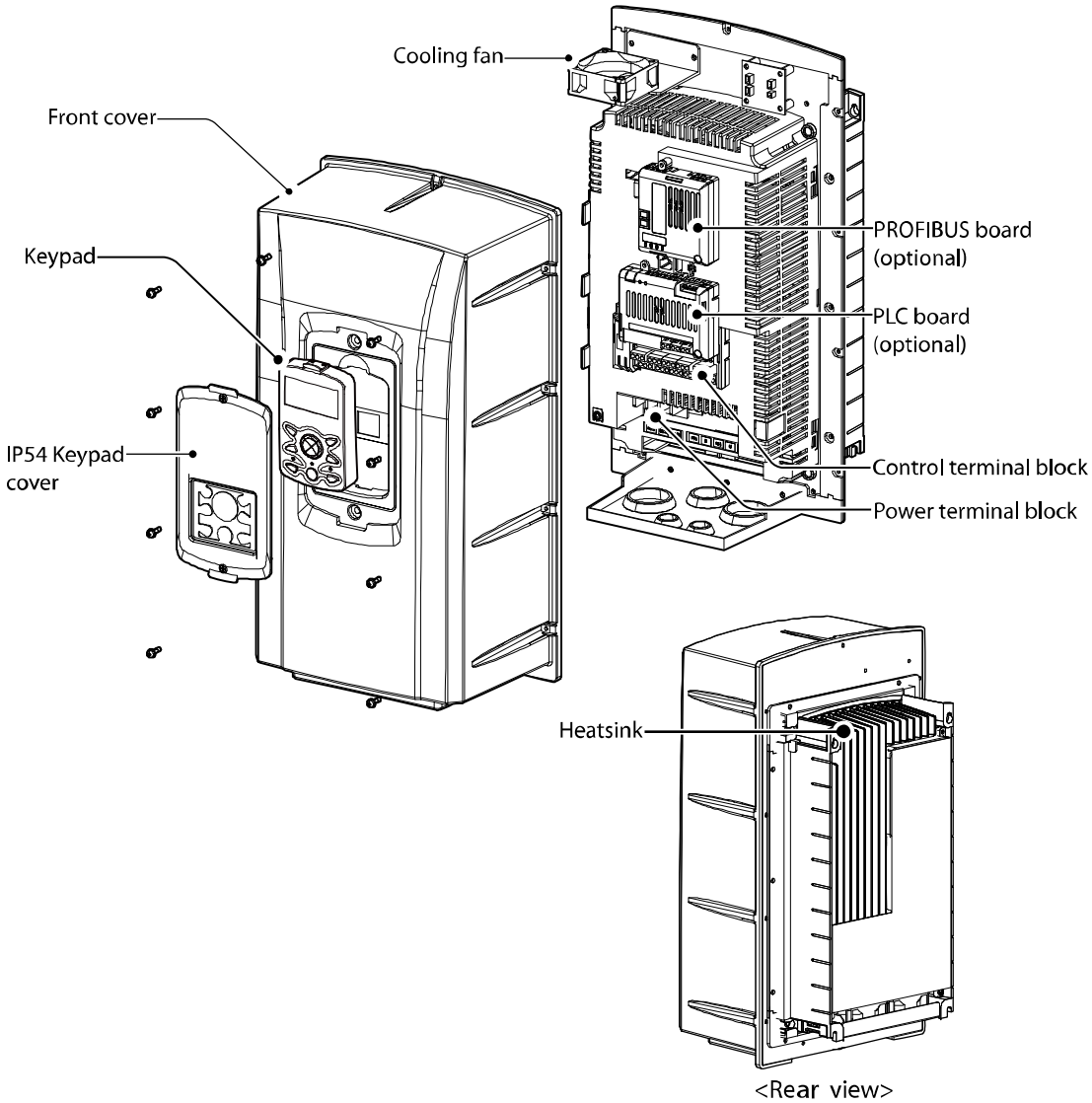

1.2.3 Interior and Exterior View (Model Types 30 kW and up [200 V] / 90 kW and up [400 V])

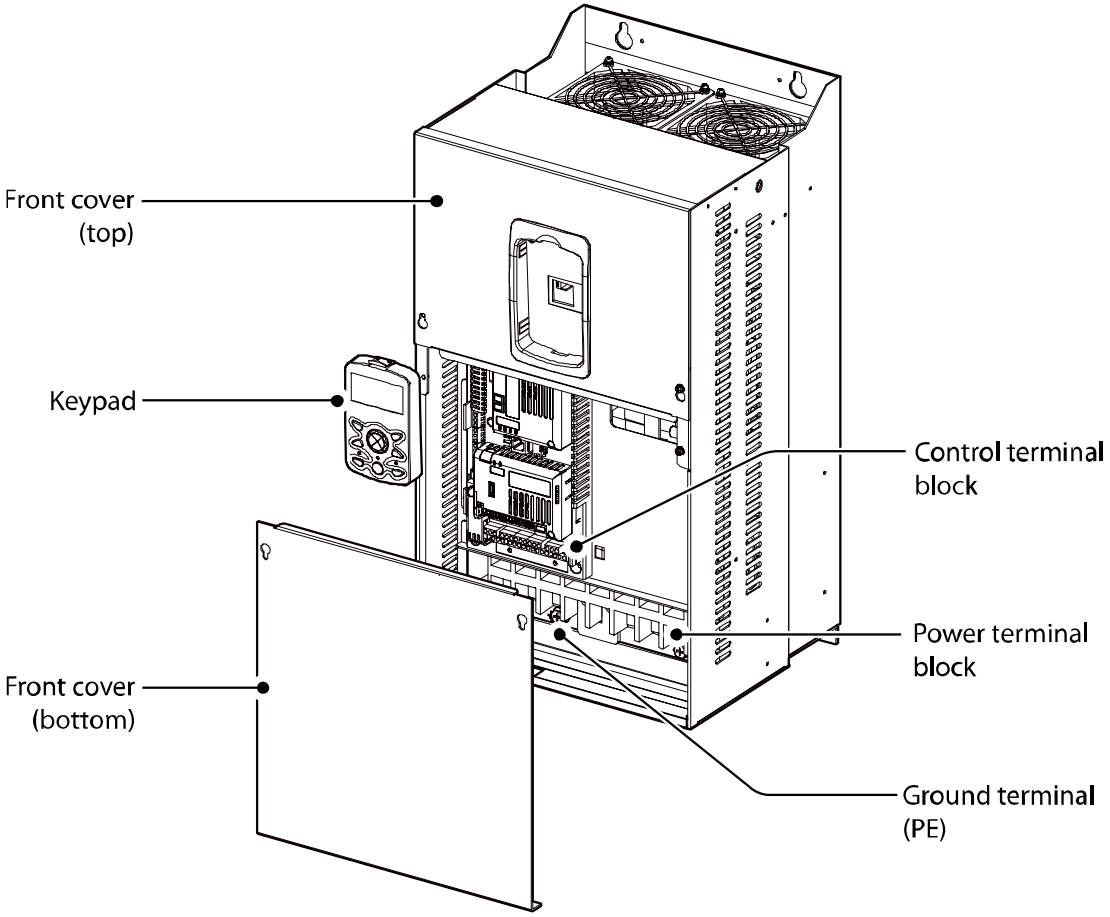

Note

Refer to the installation manual provided with the optional module products before installing communication modules in the inverter.

2 Technical Specifications

2.1 Input and Output Specifications 200 V Class (0.75–22 kW)

Model SV xxx iS7–2x			0008	0015	0022	0037	0055	0075	0110	0150	0185	0220
Applied Motor	Normal load	HP	2	3	5	7.5	10	15	20	25	30	40
		kW	1.5	2.2	3.7	5.5	7.5	11	15	18.5	22	30
	Heavy load	HP	1	2	3	5	7.5	10	15	20	25	30
		kW	0.75	1.5	2.2	3.7	5.5	7.5	11	15	18.5	22
Rated output	Rated Capacity (kVA)		1.9	3.0	4.5	6.1	9.1	12.2	17.5	22.9	28.2	33.5
	Rated Current (A)	Normal load	8	12	16	24	32	46	60	74	88	124
		Heavy load	5	8	12	16	24	32	46	60	74	88
	Output Frequency		0–400 Hz (Sensorless-1: 0–300 Hz, Sensorless-2, Vector: 0.1–120 Hz)									
	Output Voltage (V)		3-Phase 200–230 V									
Rated input	Working Voltage (V)		3-Phase 200–230 VAC (-15%–+10%)									
	Input Frequency		50–60 Hz (±5%)									
	Rated Current (A)	Normal load	6.8	10.6	14.9	21.3	28.6	41.2	54.7	69.7	82.9	116.1
		Heavy load	4.3	6.9	11.2	14.9	22.1	28.6	44.3	55.9	70.8	85.3

- Only the heavy duty ratings apply to model types without a built-in DC resistor (NON-DCR).
- The standard used for 200 V inverters is based on a 220 V supply voltage.
- The rated output current is limited based on the carrier frequency set at CON-04.
- The output frequency is limited to 0–300 Hz if DRV-09 (control mode) is set to “3 (Sensorless-1),” and to 0–120 Hz if DRV-09 (control mode) is set to “4 (Sensorless-3).”
- The maximum output voltage cannot exceed the input voltage of the power source.

2.2 Input and Output Specifications 200 V Class (30–75 kW)

Model SV xxx iS7–2x			0300	0370	0450	0550	0750					
Applied Motor	Normal load	HP	50	60	75	100	125					
		kW	37	45	55	75	90					
	Heavy load	HP	40	50	60	75	100					
		kW	30	37	45	55	75					
Rated output	Rated Capacity (kVA)		46	57	69	84	116					
	Rated Current (A)	Normal load	146	180	220	288	345					
		Heavy load	116	146	180	220	288					
	Output Frequency		0–400 Hz (Sensorless-1: 0–300 Hz, Sensorless-2, Vector: 0.1–120 Hz)									
	Output Voltage (V)		3-Phase 200–230 V									
Rated input	Working Voltage (V)		3-Phase 200–230 VAC (-15%–+10%)									
	Input Frequency		50–60 Hz (±5%)									
	Rated Current (A)	Normal load	152	190	231	302	362					
		Heavy load	121	154	191	233	305					

- The standard motor capacity is based on a standard 4-pole motor.
- The standard used for 200 V inverters is based on a 200 V supply voltage.
- The rated output current is limited based on the carrier frequency set at CON-04.
- The output frequency is limited to 0–300 Hz if DRV-09 (control mode) is set to “3 (Sensorless-1),” and to 0–120 Hz if DRV-09 (control mode) is set to “4 (Sensorless-3).”
- The maximum output voltage cannot exceed the input voltage of the power source.

2.3 Input and Output Specifications 400 V Class (0.75–22 kW)

Model SV xxx iS7–2x			0008	0015	0022	0037	0055	0075	0110	0150	0185	0220
Applied Motor	Normal load	HP	2	3	5	7.5	10	15	20	25	30	40
		kW	1.5	2.2	3.7	5.5	7.5	11	15	18.5	22	30
	Heavy load	HP	1	2	3	5	7.5	10	15	20	25	30
		kW	0.75	1.5	2.2	3.7	5.5	7.5	11	15	18.5	22
Rated output	Rated Capacity (kVA)		1.9	3.0	4.5	6.1	9.1	12.2	18.3	22.9	29.7	34.3
	Rated Current (A)	Normal load	4	6	8	12	16	24	30	39	45	61
		Heavy load	2.5	4	6	8	12	16	24	30	39	45
	Output Frequency		0–400 Hz (Sensorless-1: 0–300Hz, Sensorless-2, Vector: 0.1–120Hz)									
	Output Voltage (V)		3-Phase 380–480 V									
Rated input	Working Voltage (V)		3-Phase 380–480 VAC (-15%–+10%)									
	Input Frequency		50–60 Hz (±5%)									
	Rated Current (A)	Normal load	3.7	5.7	7.7	11.1	14.7	21.9	26.4	35.5	41.1	55.7
		Heavy load	2.2	3.6	5.5	7.5	11.0	14.4	22.0	26.6	35.6	41.6

- Only the heavy duty ratings apply to model types without a built-in DC resistor (NON- DCR).
- The standard motor capacity is based on a standard 4-pole motor.
- The standard used for 400 V inverters is based on a 440 V supply voltage.
- The rated output current is limited based on the carrier frequency set at CON-04.
- The output frequency is limited to 0-300 Hz if DRV-09 (control mode) is set to “3 (Sensorless-1),” and to 0-120 Hz if DRV-09 (control mode) is set to “4 (Sensorless-3).”
- The maximum output voltage cannot exceed the input voltage of the power source.

2.4 Input and Output Specifications 400 V Class (30–160 kW)

Model SV xxx iS7–4x			0300	0370	0450	0550	0750	0900	1100	1320	1600	
Applied Motor	Normal load	HP	50	60	75	100	125	150	200	250	300	
		kW	37	45	55	75	90	110	132	160	185	
	Heavy load	HP	40	50	60	75	100	125	150	200	250	
		kW	30	37	45	55	75	90	110	132	160	
Rated output	Rated Capacity (kVA)		46	57	69	84	116	139	170	201	248	
	Rated Current (A)	Normal load	75	91	110	152	183	223	264	325	370	
		Heavy load	61	75	91	110	152	183	223	264	325	
	Output Frequency		0–400 Hz (Sensorless-1: 0–300 Hz, Sensorless-2, Vector: 0.1–120 Hz)									
	Output Voltage (V)		3-Phase 380–480 V									
Rated input	Working Voltage (V)		3-Phase 380–480 VAC (-15%–+10%)									
	Input Frequency		50–60 Hz (±5%)									
	Rated Current (A)	Normal load	67.5	81.7	101.8	143.6	173.4	212.9	254.2	315.3	359.3	
		Heavy load	55.5	67.9	82.4	102.6	143.4	174.7	213.5	255.6	316.3	

- The standard used for 400 V inverters is based on a 440 V supply voltage.
- The rated output current is limited based on the carrier frequency set at CON-04.
- The output frequency is limited to 0–300 Hz if DRV-09 (control mode) is set to “3 (Sensorless-1),” and to 0–120 Hz if DRV-09 (control mode) is set to “4 (Sensorless-3).”
- The maximum output voltage cannot exceed the input voltage of the power source.

2.5 Input and Output Specifications 400 V Class (185–375 kW)

Model SV xxx iS7–4x			1850	2200	2800	3150	3750					
Applied Motor	Normal load	HP	350	400	500	-	-					
		kW	220	280	315	375	450					
	Heavy load	HP	300	350	400	500	-					
		kW	185	220	280	315	375					
Rated output	Rated Capacity (kVA)		286	329	416	467	557					
	Rated Current (A)	Normal load	432	547	613	731	877					
		Heavy load	370	432	547	613	731					
	Output Frequency		0–400 Hz (Sensorless-1: 0–300 Hz, Sensorless-2, Vector: 0–120 Hz)									
	Output Voltage (V)		3-Phase 380–480 V									
Rated input	Working Voltage (V)		3-Phase 380–480 VAC (-15%–+10%)									
	Input Frequency		50–60 Hz (±5%)									
	Rated Current (A)	Normal load	463	590	673	796	948					
		Heavy load	404	466	605	674	798					

- The standard motor capacity is based on a standard 4-pole motor.
- The standard used for 400 V inverters is based on a 440 V supply voltage.
- The rated output current is limited based on the carrier frequency set at CON-04.
- The output frequency is limited to 0–300 Hz if DRV-09 (control mode) is set to “3 (Sensorless-1),” and to 0–120 Hz if DRV-09 (control mode) is set to “4 (Sensorless-3).”
- The maximum output voltage cannot exceed the input voltage of the power source.

Note

[English]
The maximum allowed prospective short-circuit current at the input power connection is defined in IEC 60439-1 as 100 kA. The drive is suitable for use in a circuit capable of delivering not more than 100 kA RMS at the drive's maximum rated voltage, depending on the selected MCCB. RMS symmetrical amperes for recommended MCCB are the following table.

[French]
Le courant maximum de court-circuit présumé autorisé au connecteur d'alimentation électrique est défini dans la norme IEC 60439-1 comme égal à 100 kA. L'entraînement convient pour une utilisation dans un circuit capable de délivrer pas plus de 100 kA RMS à la tension nominale maximale de l'entraînement. Le tableau suivant indique le MCCB recommandé selon le courant RMS symétrique en ampères.

Working Voltage	UTE100 (E/N)	UTS150 (N/H/L)	UTS250 (N/H/L)	UTS400 (N/H/L)
240V(50/60Hz)	50/65kA	65/100/150kA	65/100/150kA	65/100/150kA
480V(50/60Hz)	25/35kA	35/65/100kA	35/65/100kA	35/65/100kA

Working Voltage	ABS33c	ABS53c	ABS63c	ABS103c	ABS203c	ABS403c
240V(50/60Hz)	30kA	35kA	35kA	85kA	85kA	75kA
480V(50/60Hz)	7.5kA	10kA	10kA	26kA	26kA	35kA

2.6 Product Specification Details

2.6.1 Control

Items		Description
Control	Control modes	V/F control, V/F PG, slip compensation, sensorless vector-1, sensorless vector-2, vector control
	Frequency settings resolution	Digital command: 0.01 Hz Analog command: 0.06 Hz (maximum frequency: 60 Hz)
	Frequency accuracy	Digital command: 0.01% of maximum output frequency Analog command: 0.1% of maximum output frequency
	V/F pattern	Linear, square reduction, user V/F
	Overload capacity	Rated current for heavy duty operation: 150% for 1 min Rated current for normal duty operation: 110% for 1 min
	Torque boost	Manual torque boost, automatic torque boost

- Only the heavy load ratings apply to 0.75-22 kW model types without a built-in DC resistor (NON-DCR).

2.6.2 Operation

Items			Description
Operation	Operation types		Select from keypad, terminal strip, or network communication operation.
	Frequency settings		Analog type: -10–10 V, 0–10 V, 0–20 mA Digital type: keypad
	Operation function		• PID control • 3-wire operation • Frequency limit • Second function • Reverse rotation prevention • Inverter bypass • Flying start • Power braking • Leakage reduction • Easy start • Up-down operation • DC braking • Frequency jump • Slip compensation • Automatic restart • Automatic tuning • Energy buffering • Flux braking • MMC
	Input	Multi-	Select NPN (Sink) or PNP (Source) mode.

Items			Description	
		function terminal (8 EA) P1–P8*	• Forward direction operation • Reset • Emergency stop • Multi-step speed frequency-high/med/low • DC braking during stop • Frequency increase • 3-wire operation • Acceleration/deceleration/stop • Operation by keypad input during an operation by network communication	• Reverse direction operation • External trip • Jog operation • Multi-step acc/dec-high/med/low • Second motor selection • Frequency reduction • Transition from PID to general operation • Analog command frequency fix
	Output	Multi-function open collector terminal	Fault output and inverter operation status output	Less than DC 26 V, 100 mA
		Multi-function relay terminal		N.O.: Less than AC 250 V 5A, DC 30 V, 5A N.C.: Less than AC 250 V 3A, DC 30 V 3A
		Analog output	DC 0–10 V, 0–20 mA: Select output type from frequency, current, voltage, or DC voltage.	

* Set the Input Group codes IN-65 through IN-72 to configure the multi-function terminal functions.

2.6.3 Protection Function

Items		Description
Protection function	Trips	• Over voltage • Low voltage • Over current • Earth current detection • Inverter overheat • Motor overheat • Output imaging • Overload protection • Network communication error • Lost command • Hardware failure • Cooling fan failure • Pre-PID failure • No motor trip • External trip • Other safety functions
	Alarms	• Stall prevention • Overload • Light load • Encoder error • Fan failure • Keypad command loss • Speed command loss
	Instantaneous blackout	Less than 15 ms (CT) [Less than 8 ms (VT)]: Continue operation (must be within the rated input voltage and rated output range). Over 15 ms (CT) [Over 8 ms (VT)]: Automatically restart

2.6.4 Structure and Operating Environment Control

Items		Description
Structure/ operating environment	Cooling type	Forced cooling: 0.75–15 kW (200/400 V class), 22 kW (400 V class) Inhalation cooling: 22–75 kW (200 V class), 30–375 kW (400 V class)
	Protection structure	- 0.75–22 kW (200V), 0.75–75 kW (400 V): Open type IP 21 (default), UL enclosed type 1 (optional)* - 30–75 kW (200 V), 90–375 kW (400 V): Open type IP 00 - 0.75–22 kW, frame types 2, 4 and others.: Enclosed IP54 type, UL enclosed type 12
	Ambient temperature	• CT load (heavy duty): -10–50℃ • VT load (normal duty): -10–40℃ - No ice or frost should be present. - Working under normal load at 50℃ (122°F), it is recommended that less than 80% load is applied. • IP54 product: -10–40℃

Items		Description
		- No ice or frost should be present.
	Storage temperature.	-20°C–65°C (-4–149°F)
	Ambient humidity	Relative humidity less than 90% RH (to prevent condensation from forming)
	Operation altitude	Maximum 1000m above sea level for standard operation. From 1000 to 4000m, the rated input voltage and rated output current of the drive must be derated by 1% for every 100m.
	Oscillation	Less than 5.9 m/sec^2 (0.6 G).
	Surrounding environment	Prevent contact with corrosive gases, inflammable gases, oil stains, dust, and other pollutants (Pollution Degree 2 Environment).

* UL Enclosed type 1 when an optional conduit box is installed. The 30–75 kW (200 V class) product is regarded as UL Open type IP 20 when an optional conduit box is installed.

3 Installing the Inverter

3.1 Installation Considerations

Inverters are composed of various precision electronic devices, and therefore the installation environment can significantly impact the lifespan and reliability of the product. The table below details the ideal operation and installation conditions for the inverter.

Items	Description
Ambient Temperature*	CT load (heavy duty): -10℃–50℃ VT load (normal duty): -10℃–40℃ IP54 model types: -10℃–40℃
Ambient Humidity	90% relative humidity (no condensation)
Storage Temperature	- 4–149°F (-20–65℃)
Environmental Factors	An environment free from corrosive or flammable gases, oil residue, or dust (pollution degree 2)
Altitude/Vibration	Lower than 3,280 ft (1,000 m) above sea level/less than 0.6 G (5.9 m/sec2)
Air Pressure	70–106 kPa

*The ambient temperature is the temperature measured at a point 2” (5 cm) from the surface of the inverter. No ice or frost should be present.

Caution

- Do not transport the inverter by lifting with the inverter’s covers or plastic surfaces. The inverter may tip over if covers break, causing injuries or damage to the product. Always support the inverter using the metal frames when moving it.
- Hi-capacity inverters are very heavy and bulky. Use an appropriate transport method that is suitable for the weight. Do not place heavy objects on top of electric cables. Doing so may damage the cable and result in an electric shock.
- Do not install the inverter on the floor or mount it sideways against a wall. The inverter must be installed vertically, on a wall or inside a panel, with its rear flat on the mounting surface.

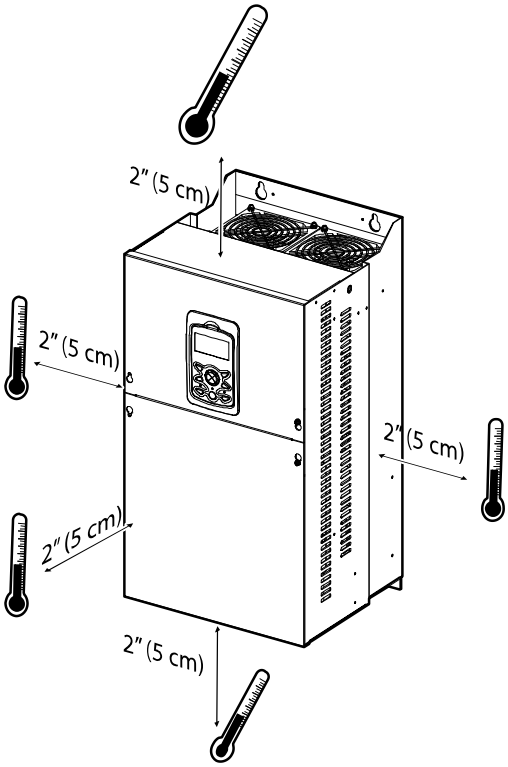

Caution

Do not allow the ambient temperature to exceed the allowable range while operating the inverter.

3.2 Selecting and Preparing a Site for Installation

When selecting an installation location, consider the following requirements:

- The inverter must be installed on a wall that can support the inverter's weight.
- The location must be free from vibration. Vibrations can adversely affect the operation of the inverter.
- The inverter can become very hot during operation. Install the inverter on a surface that is fire resistant or flame retardant with sufficient clearance around the inverter to allow for air circulation. The illustrations below detail the required installation clearances.

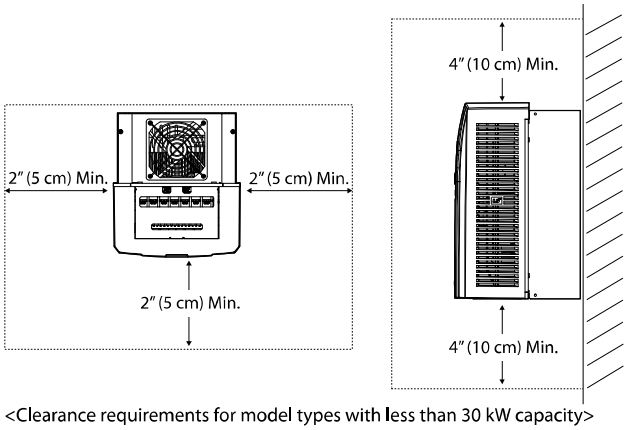

<Clearance requirements for model types with less than 30 kW capacity>

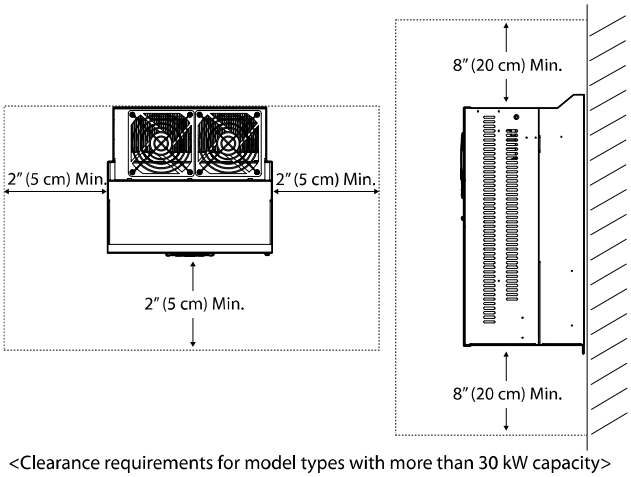

<Clearance requirements for model types with more than 30 kW capacity>

ⓘ Caution

Install the inverter on a non-flammable surface, and do not place flammable material near the inverter. Otherwise, a fire may result.

Note

Model types with capacities of 30 kW or more require a minimum of 8" clearance above and below the unit.

- Ensure that the cable conduits do not obstruct the air flow to and from the cooling fan.

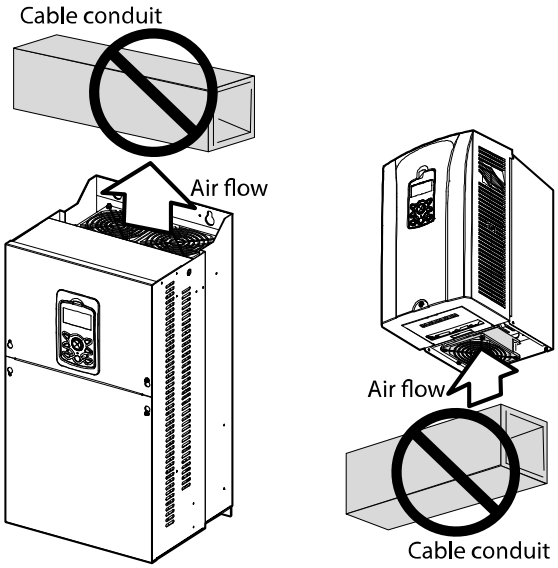

- Ensure sufficient air circulation is provided around the inverter when it is installed. If the inverter is to be installed inside a panel, enclosure, or cabinet rack, carefully consider the position of the inverter's cooling fan and vents. The cooling fan must be positioned to efficiently dissipate the heat generated by the operation of the inverter.

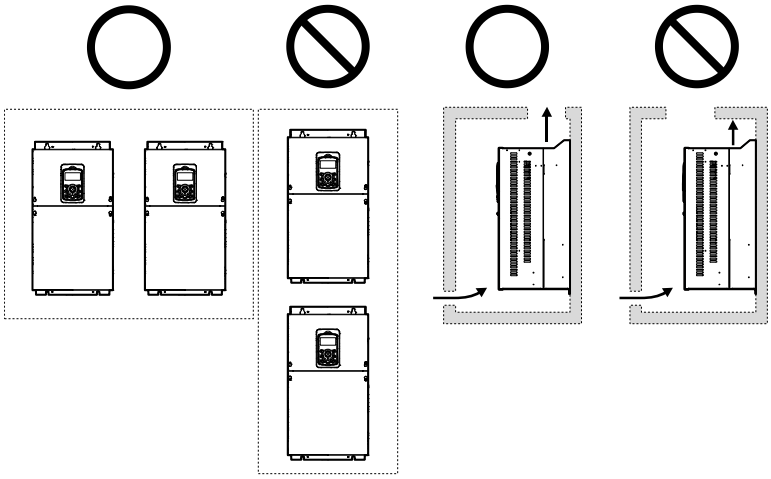

Note

In order to meet EMC standards, 200 V, 30–75 kW model types and model types with capacities of 90 kW or more should be installed inside a metal cabinet.

- If you are installing multiple inverters of different ratings, provide sufficient clearance to meet the clearance specifications of the larger inverter. The iS7 inverters rated for up to 30 kW may be installed side by side.

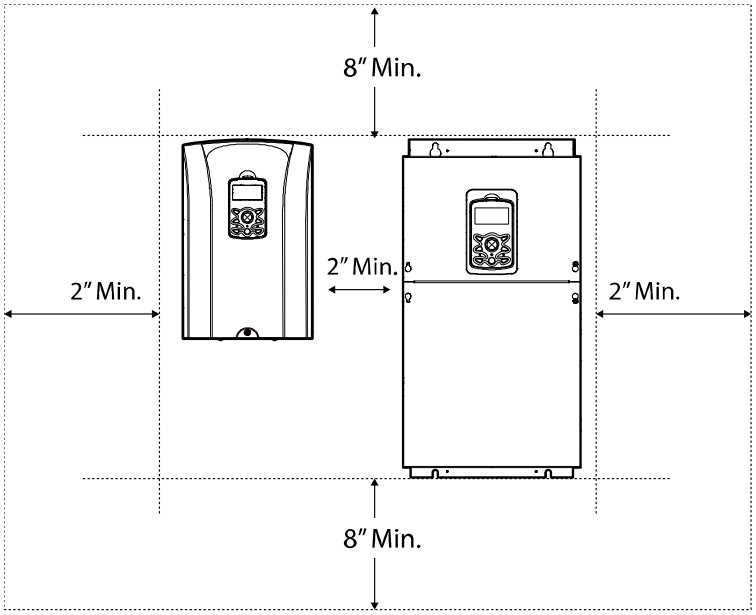

3.3 Exterior and Dimensions (UL Enclosed Type 1, IP21 Type)

SV0008-0037iS7 (200 V/400 V)

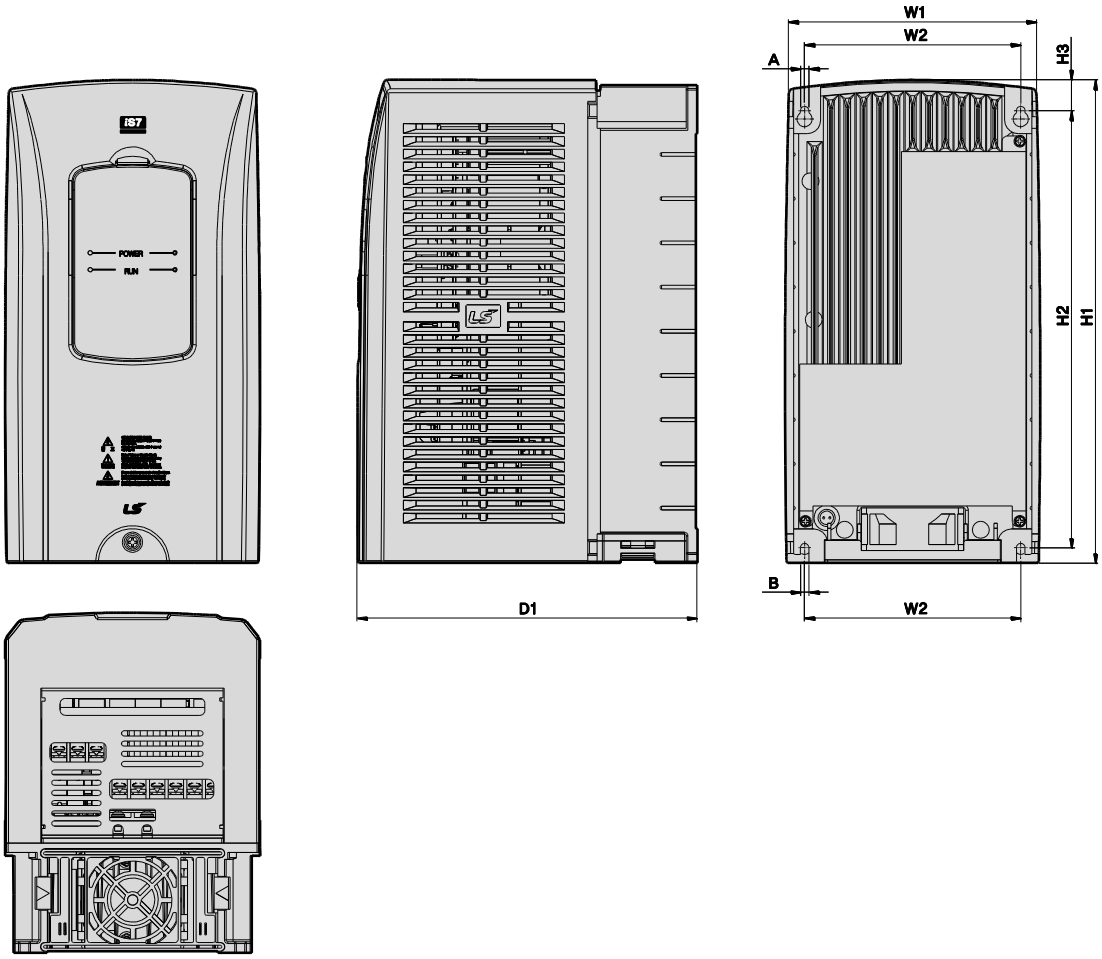

Units: mm (inch)

Inverter Capacity	W1	W2	H1	H2	H3	D1	A	B
SV0008–0037 iS7 - 2/4	150 (5.90)	127 (5.00)	284 (11.18)	257 (10.11)	18 (0.70)	200 (7.87)	5 (0.19)	5 (0.19)

SV0055-0075iS7 (200 V/400 V)

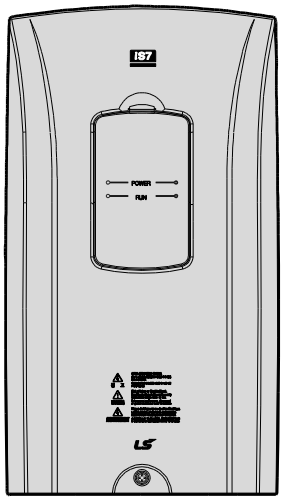

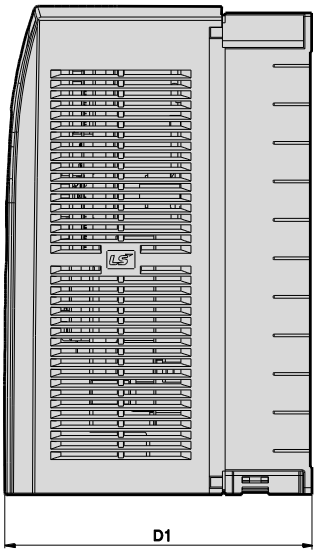

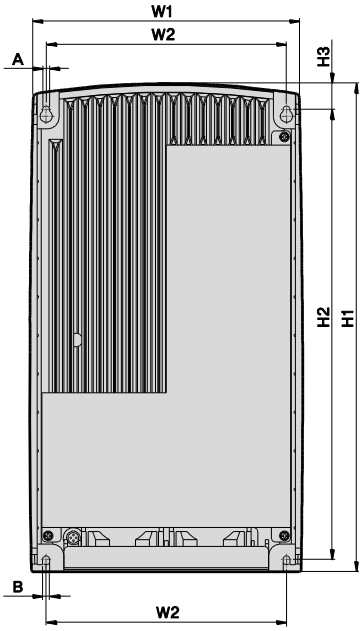

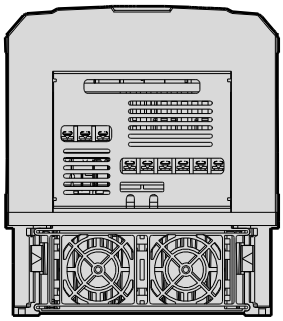

Units: mm (inch)

Inverter Capacity	W1	W2	H1	H2	H3	D1	A	B
SV0055–0075 iS7 - 2/4	200 (7.87)	176 (6.92)	355 (13.97)	327 (12.87)	19 (0.74)	225 (8.85)	5 (0.19)	5 (0.19)

SV0110-0150iS7 (200 V/400 V)

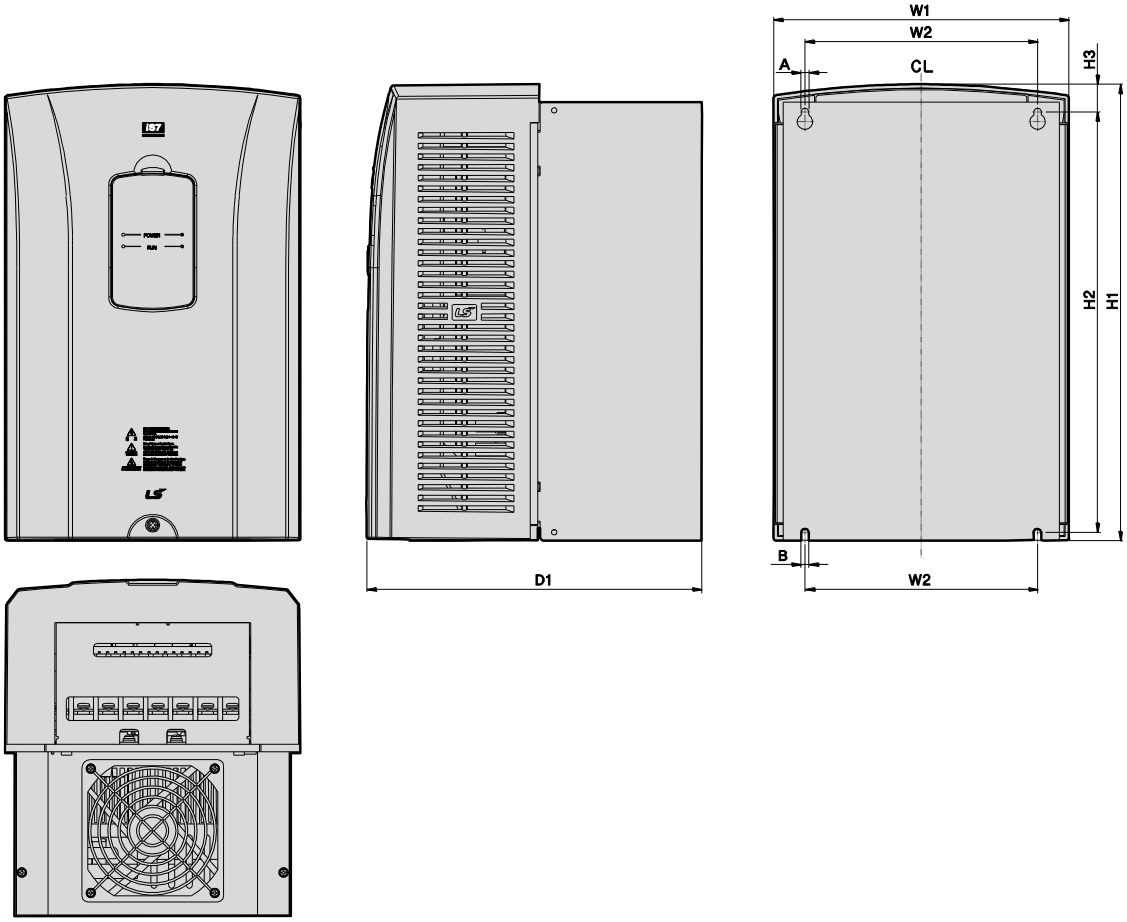

Units: mm (inch)

Inverter Capacity	W1	W2	H1	H2	H3	D1	A	B
SV0110–0150 iS7- 2/4	250 (9.84)	214.6 (8.44)	385 (15.15)	355 (13.97)	23.6 (0.92)	284 (11.18)	6.5 (0.25)	6.5 (0.25)

SV0185-0220iS7 (200 V/400 V)

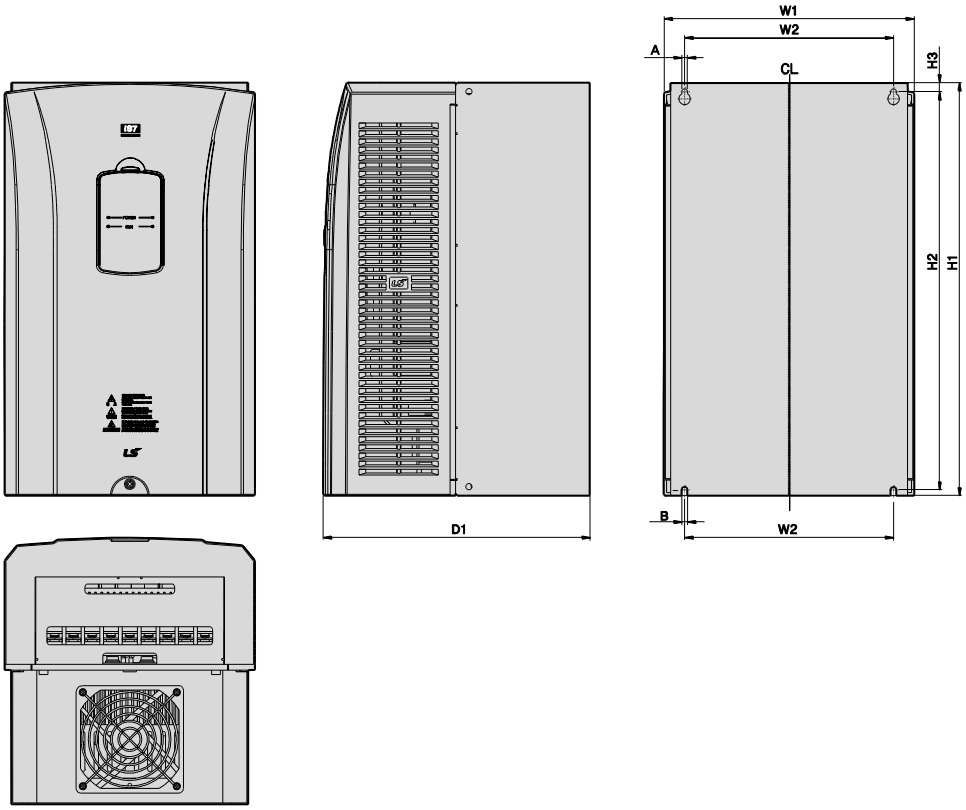

Units: mm (inch)

Inverter Capacity	W1	W2	H1	H2	H3	D1	A	B
SV0185–0220iS7- 2/4	280 (11.02)	243.5 (9.58)	461.6 (18.17)	445 (17.51)	10.1 (0.39)	299 (11.77)	6.5 (0.25)	6.5 (0.25)

SV0300-iS7 (200 V, IP00 Type)

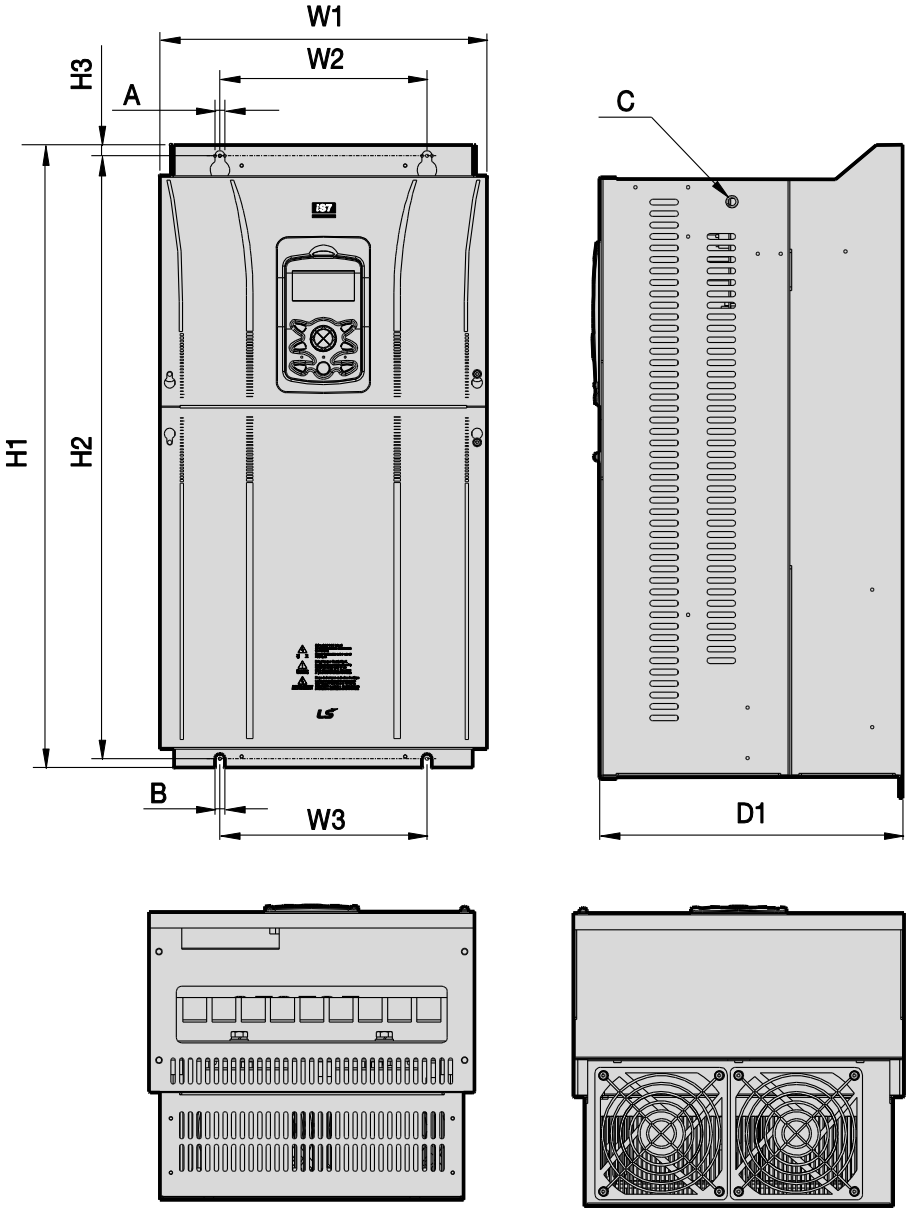

Units: mm (inch)

Inverter Capacity	W1	W2	W3	H1	H2	H3	D1	A	B	C
SV0300 iS7-2	300 (11.81)	190 (7.48)	190 (7.48)	570 (22.44)	552 (21.73)	10 (0.39)	265.2 (10.44)	10 (0.39)	9 (0.35)	M8

SV0370-0450iS7 (200 V, IP00 Type)

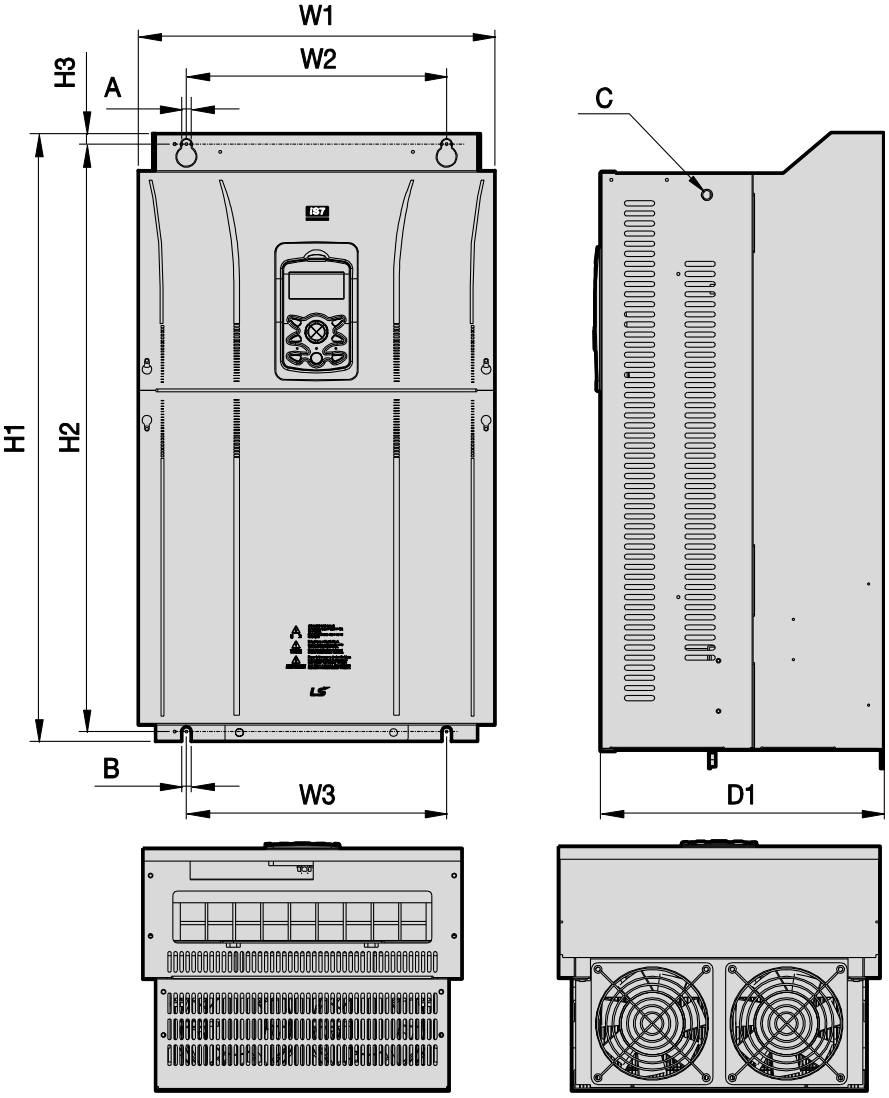

Units: mm (inch)

Inverter Capacity	W1	W2	W3	H1	H2	H3	D1	A	B	C
SV0370–0450 iS7-2	370 (14.56)	270 (10.63)	270 (10.63)	630 (24.8)	609 (23.97)	11 (0.43)	281.2 (11.07)	10 (0.39)	10 (0.39)	M10

SV0300-0450iS7 (400 V)

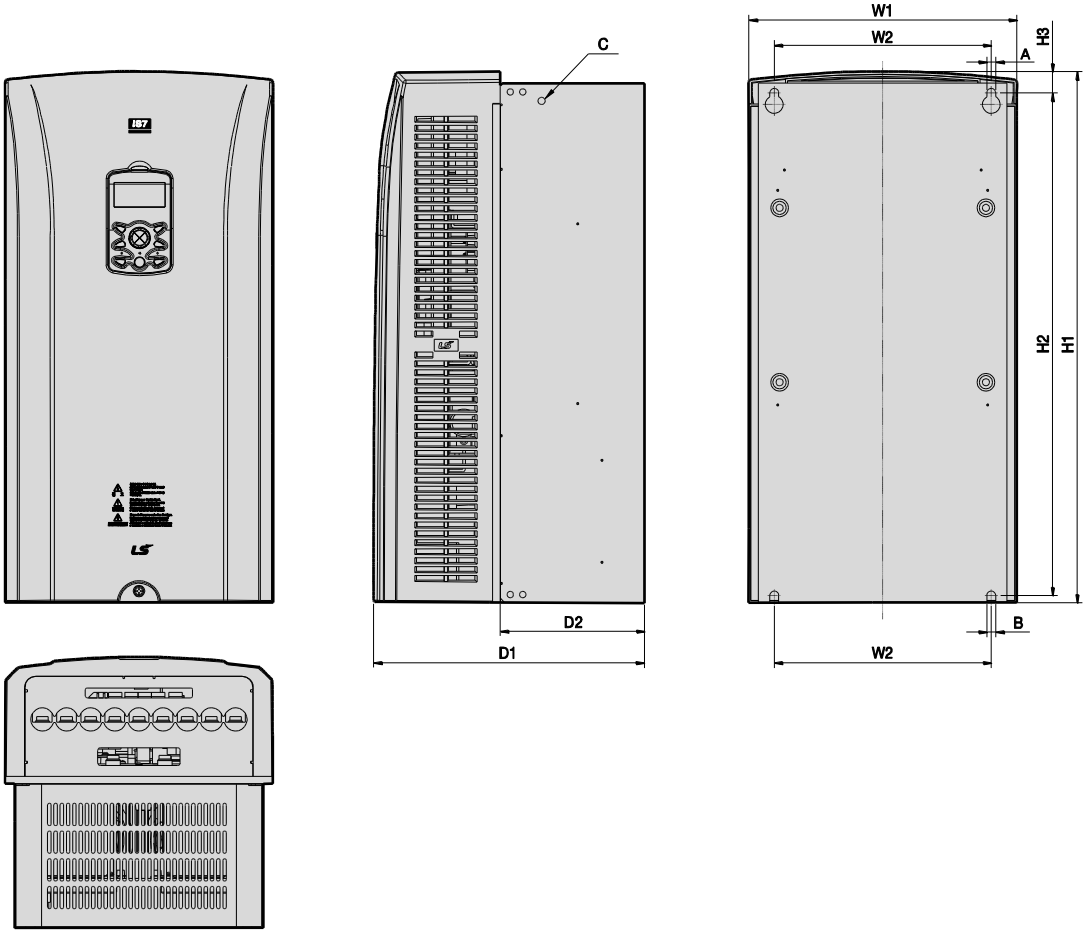

Units: mm (inch)

Inverter Capacity	W1	W2	H1	H2	H3	D1	D2	A	B	C
SV300–450 iS7-4	300 (11.81)	242.8 (9.55)	594 (23.39)	562 (22.12)	24.1 (0.94)	DCR type		10 (0.39)	10 (0.39)	M8
						303.2 (11.93)	161 (6.33)			
						Non-DCR type				
						271.2 (10.67)	129 (5.78)			

SV0550-0750iS7 (200 V, IP00 Type)

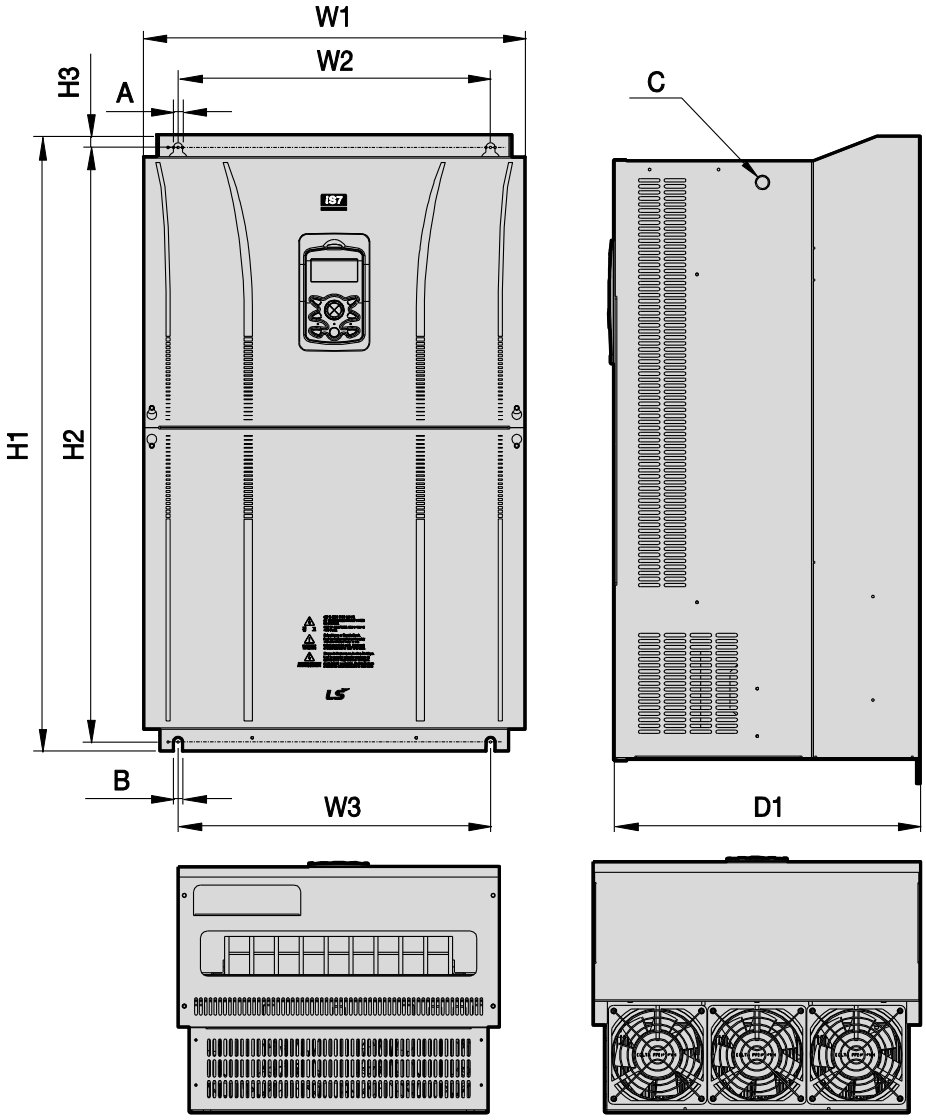

Units: mm (inch)

Inverter Capacity	W1	W2	W3	H1	H2	H3	D1	A	B	C
SV0550–0750 iS7-2	465 (18.3)	381 (15.0)	381 (15.0)	750 (29.52)	723.5 (28.48)	15.5 (0.61)	355.6 (14.0)	11 (0.43)	11 (0.43)	M16

SV0550-0750iS7 (400 V)

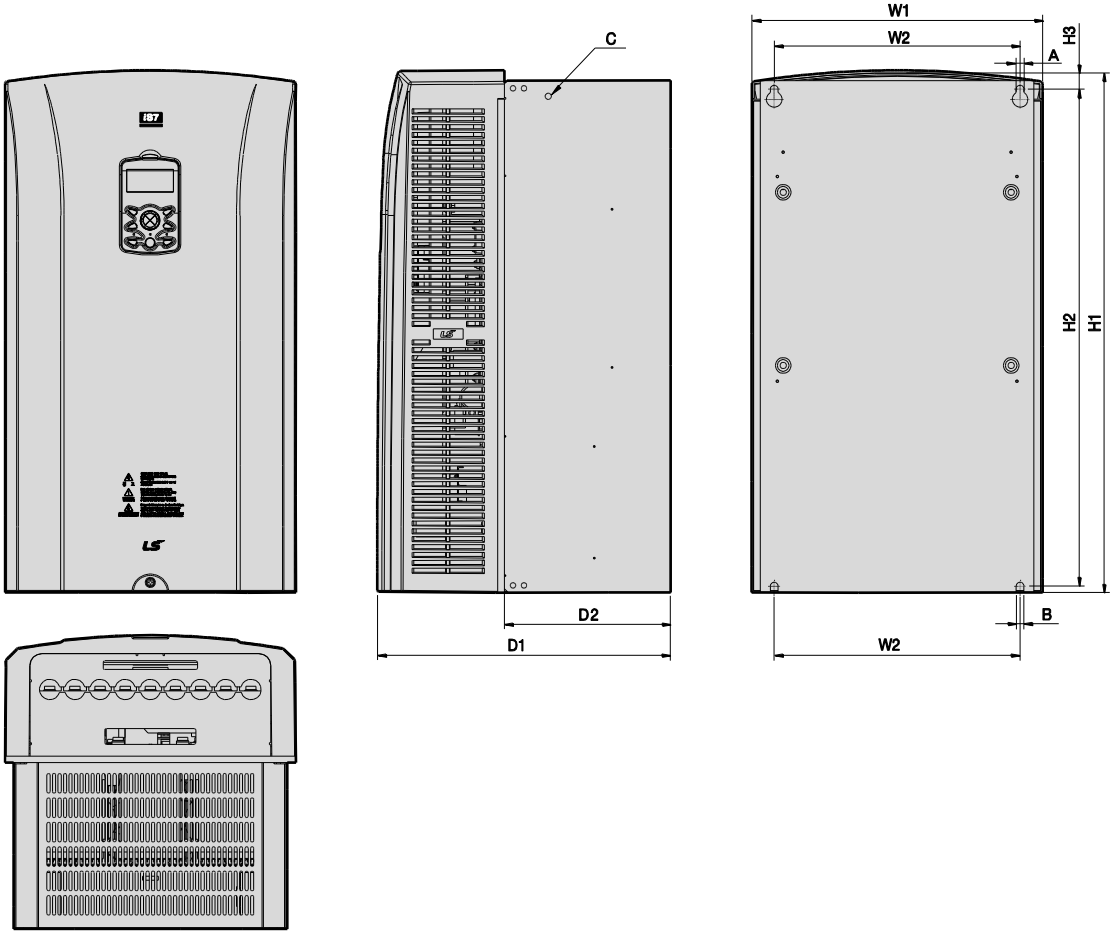

Units: mm (inch)

Inverter Capacity	W1	W2	H1	H2	H3	D1	D2	A	B	C
SV0550–0750 iS7-4	370 (14.57)	312.8 (12.31)	663.4 (26.12)	631.4 (24.85)	24.1 (0.94)	DCR type		10 (0.39)	10 (0.39)	M8
						373.3 (14.69)	211.5 (8.32)			
						Non-DCR type				
						312.4 (12.29)	150.6 (5.92)			

SV0900-1100iS7 (400 V, IP00 Type)

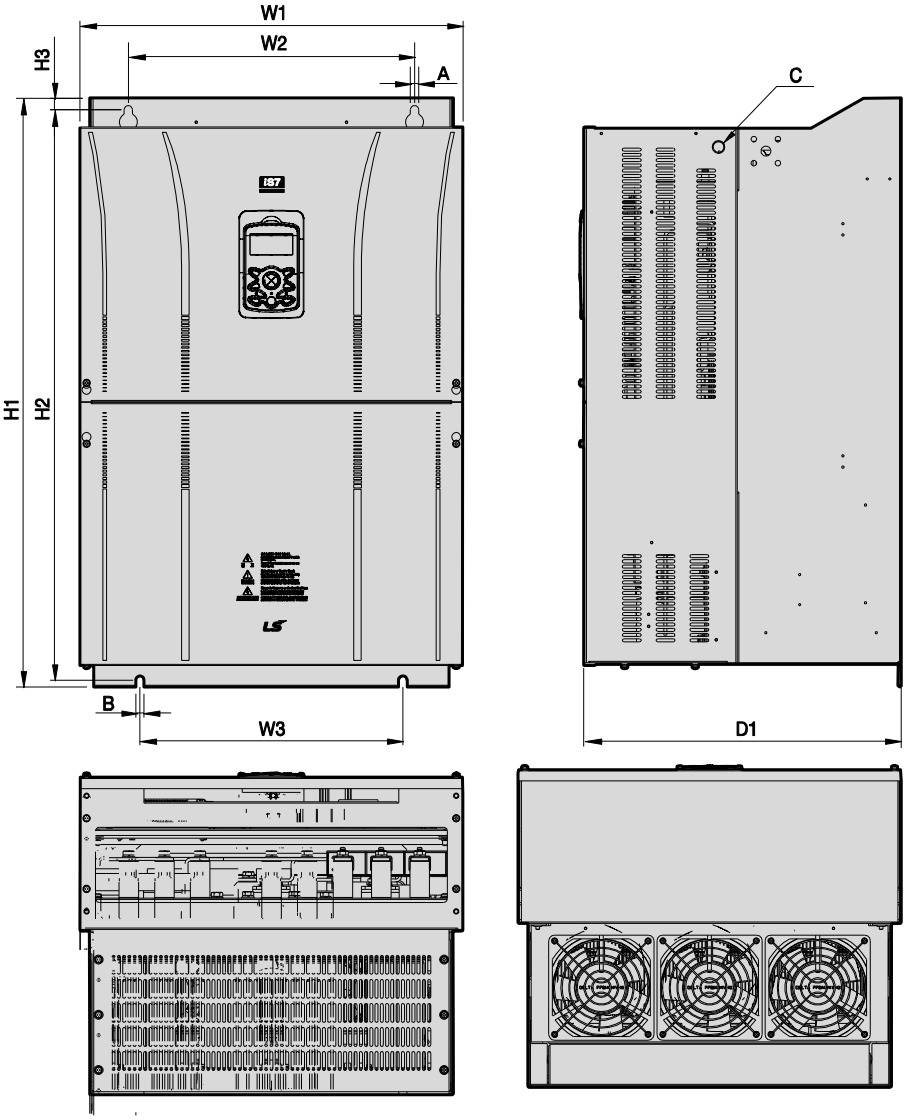

Units: mm (inch)

Inverter Capacity	W1	W2	W3	H1	H2	H3	D1	A	B	C
SV0900–1100 iS7-4	510 (20.07)	381 (15.0)	350 (13.77)	783.5 (30.84)	759 (29.88)	15.5 (0.61)	422.6 (16.63)	11 (0.43)	11 (0.43)	M16

SV1320-1600iS7 (400 V, IP00 Type)

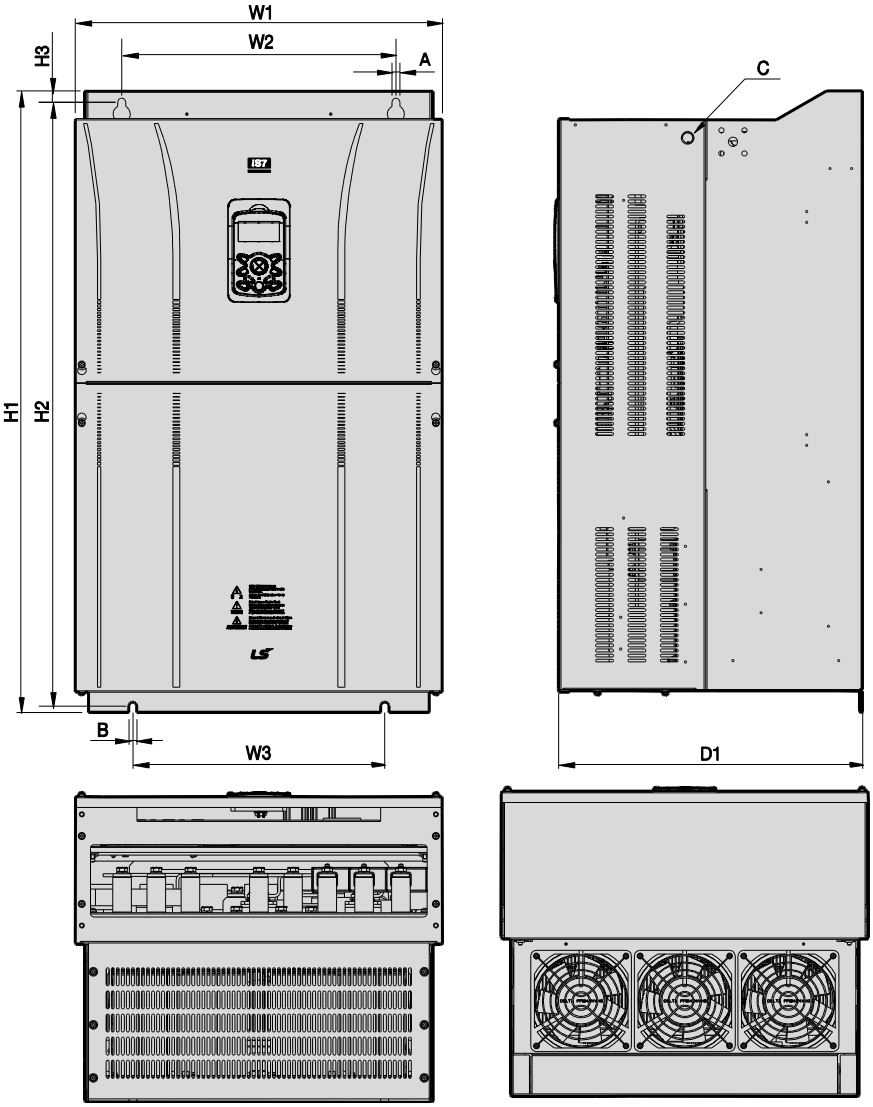

Units: mm (inch)

Inverter Capacity	W1	W2	W3	H1	H2	H3	D1	A	B	C
SV1320–1600 iS7-4	510 (20.07)	381 (15.0)	350 (13.77)	861 (33.89)	836.5 (32.93)	15.5 (0.61)	422.6 (16.63)	11 (0.43)	11 (0.43)	M16

SV1850-2200iS7 (400 V, IP00 Type)

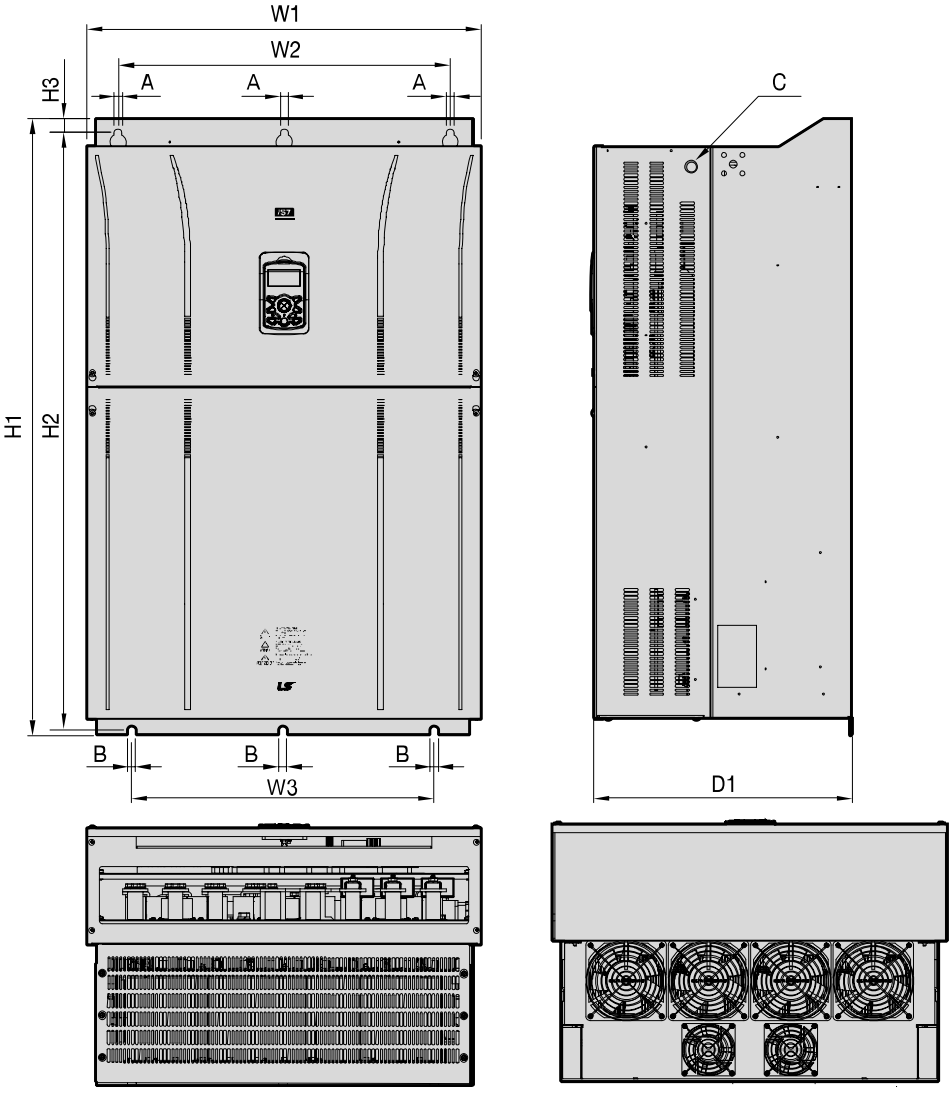

Units: mm (inch)

Inverter Capacity	W1	W2	W3	H1	H2	H3	D1	A	B	C
SV1850/ 2200iS7-4	690 (27.16)	581 (22.87)	528 (20.79)	1078 (42.44)	1043.5 (41.08)	25.5 (1.00)	449.6 (17.70)	14 (0.55)	15 (0.59)	M20

SV2800iS7 (400 V, IP00 Type)

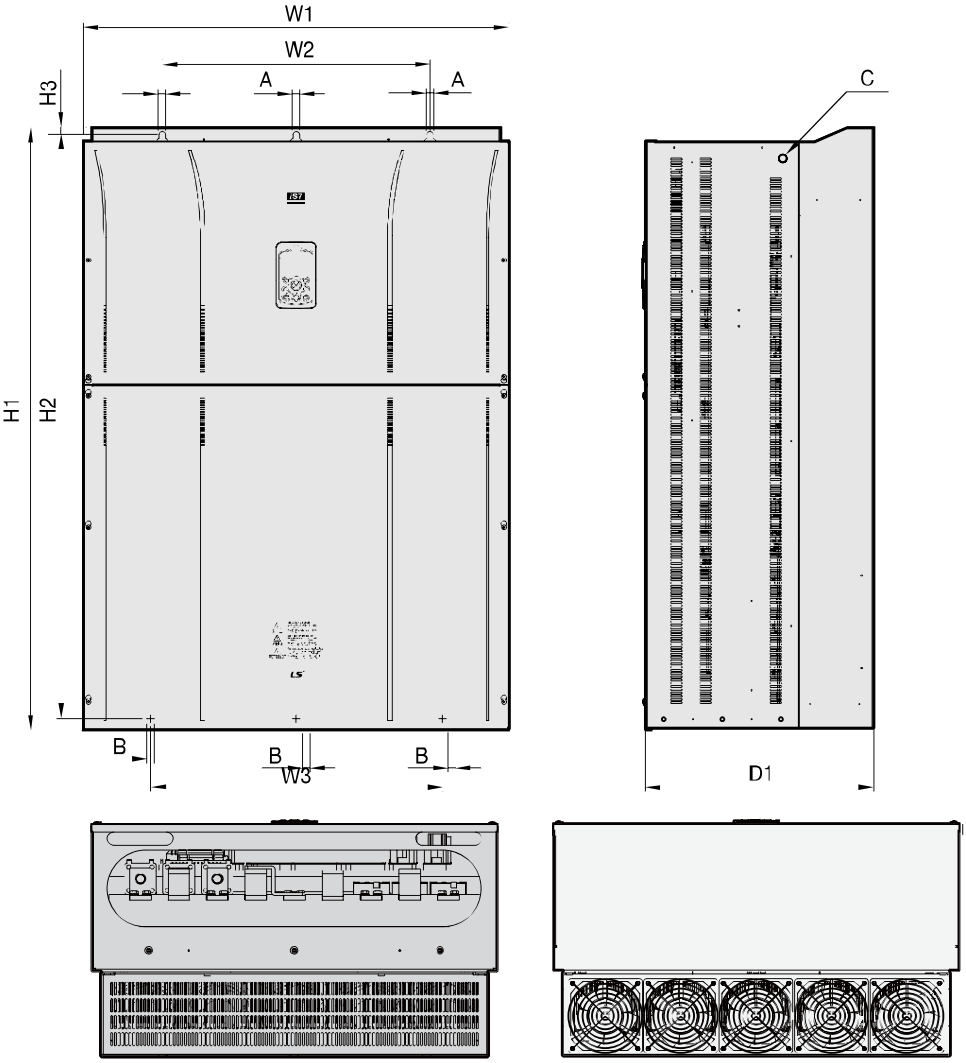

Units: mm (inch)

Inverter Capacity	W1	W2	W3	H1	H2	H3	D1	A	B	C
SV2800iS7-4	772 (30.39)	500 (19.69)	500 (19.69)	1140.5 (44.90)	1110 (43.70)	15 (0.59)	442 (17.40)	13 (0.51)	13 (0.51)	M16

For 280 kW model types, I volts are supplied with the product.

SV3150-3750iS7 (400 V, IP00 Type)

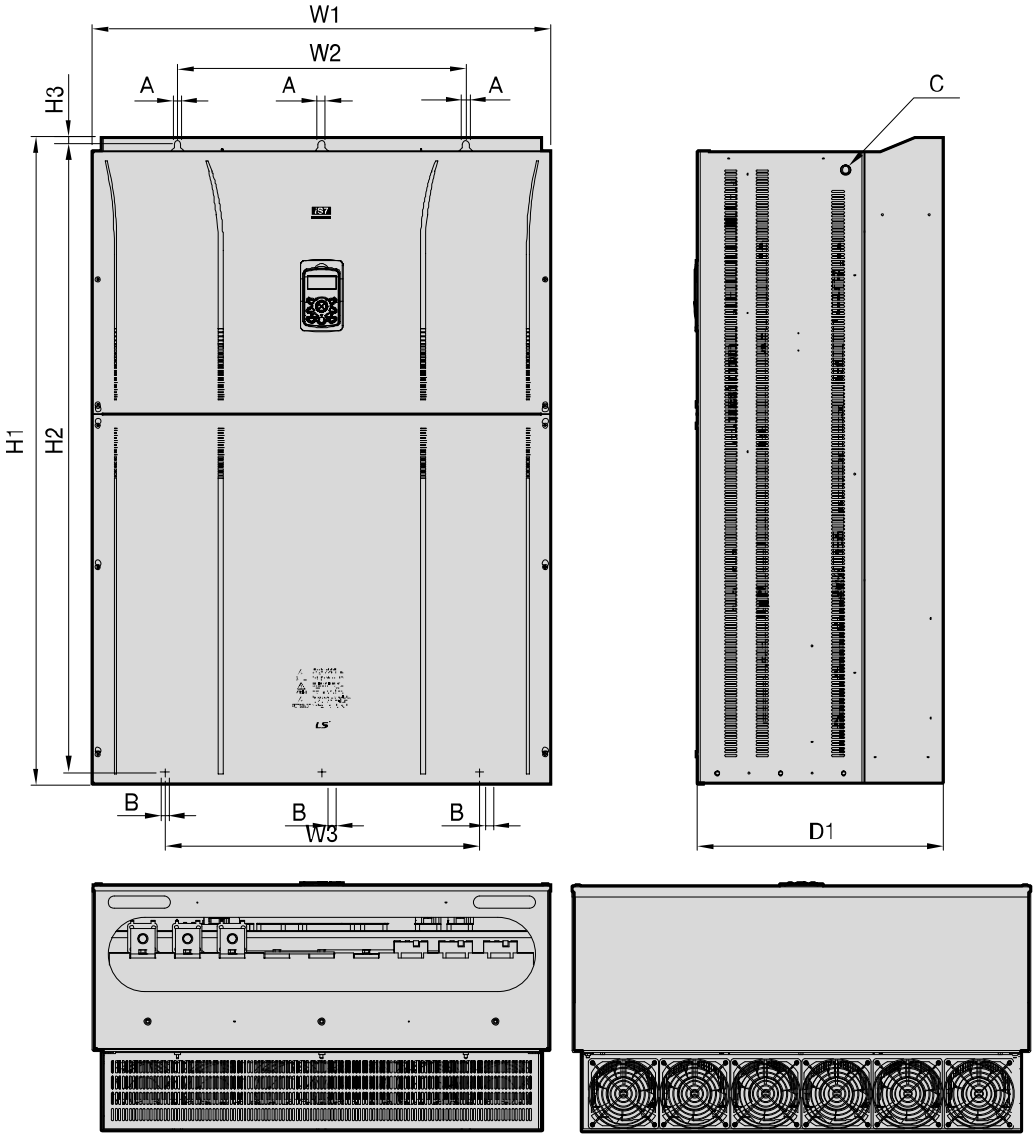

Units: mm (inch)

Inverter Capacity	W1	W2	W3	H1	H2	H3	D1	A	B	C
SV3150/ 3750iS7-4	922 (36.30)	580 (22.83)	580 (22.83)	1302.5 (51.28)	1271.5 (50.06)	15.5 (0.61)	495 (19.49)	14 (0.55)	14 (0.55)	M16

For 315-375 kW model types, I volts are supplied with the product.

3.4 Exterior and Dimensions (UL Enclosed Type 12, IP54 Type)

SV0008-0037iS7 (200 V/400 V)

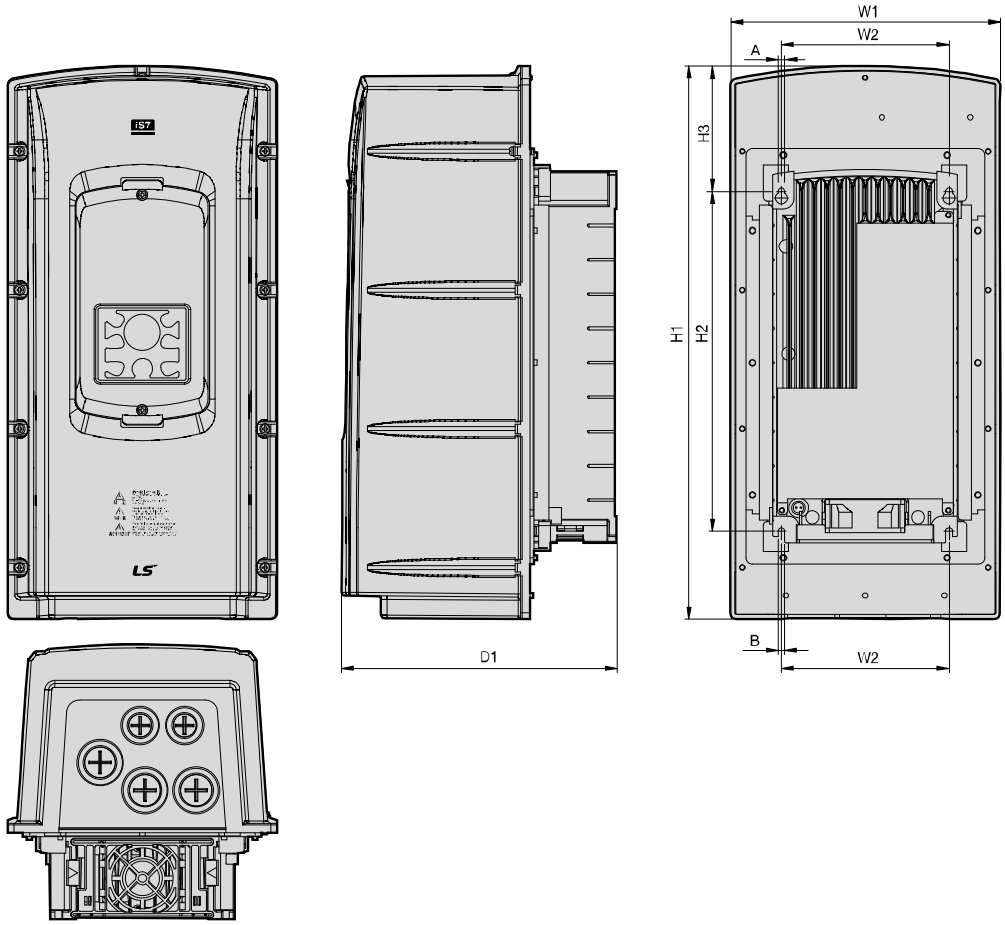

Units: mm (inch)

Inverter Capacity	W1	W2	H1	H2	H3	D1	A	B
SV0008–0037 iS7-2/4	204.2 (8.03)	127 (5.0)	419 (16.49)	257 (10.11)	95.1 (3.74)	208 (8.18)	5 (0.19)	5 (0.19)

SV0055-0075iS7 (200 V/400 V)

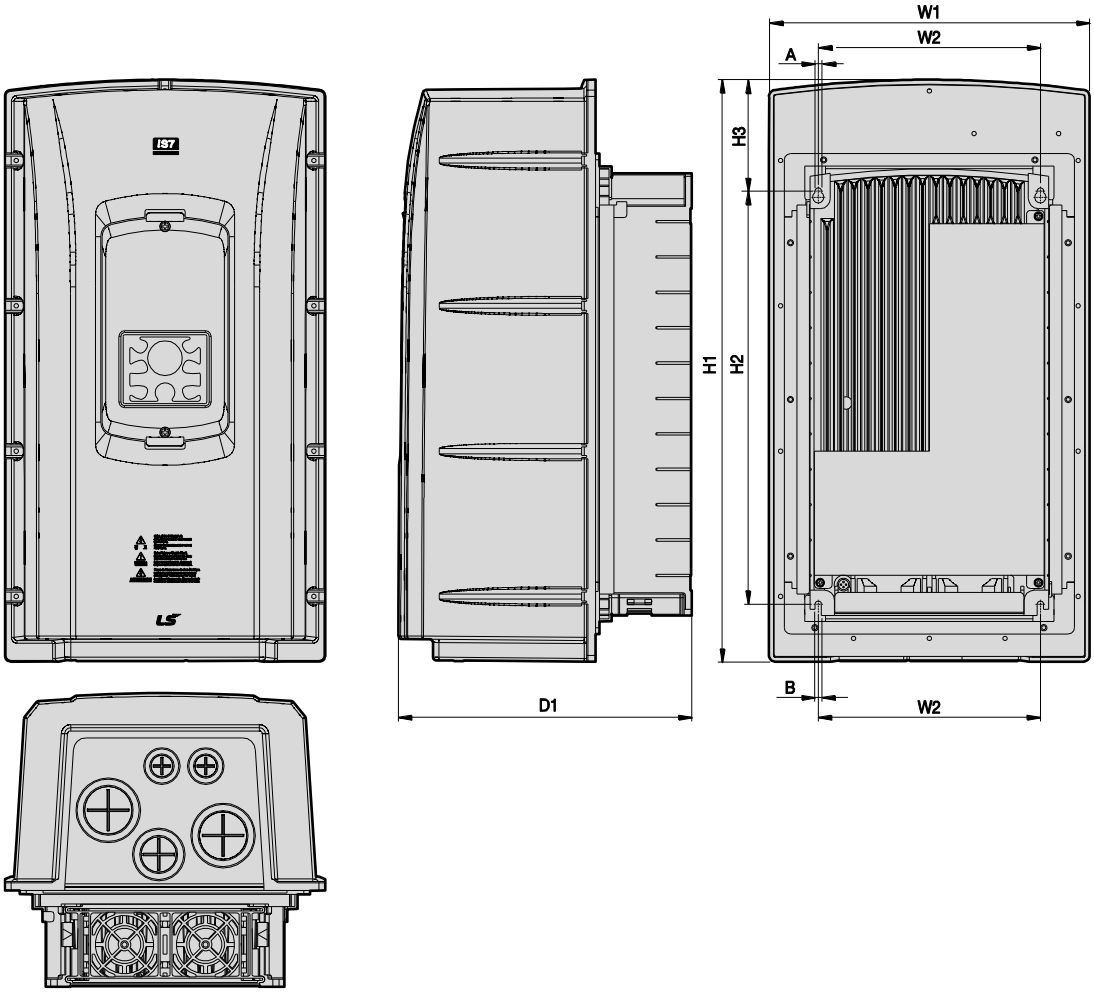

Units: mm (inch)

Inverter Capacity	W1	W2	H1	H2	H3	D1	A	B
SV0055–0075 iS7-2/4	254 (10.0)	176 (6.92)	460.6 (18.13)	327 (12.87)	88.1 (3.46)	232.3 (9.14)	5 (0.19)	5 (0.19)

SV0110-0150iS7 (200 V/400 V)

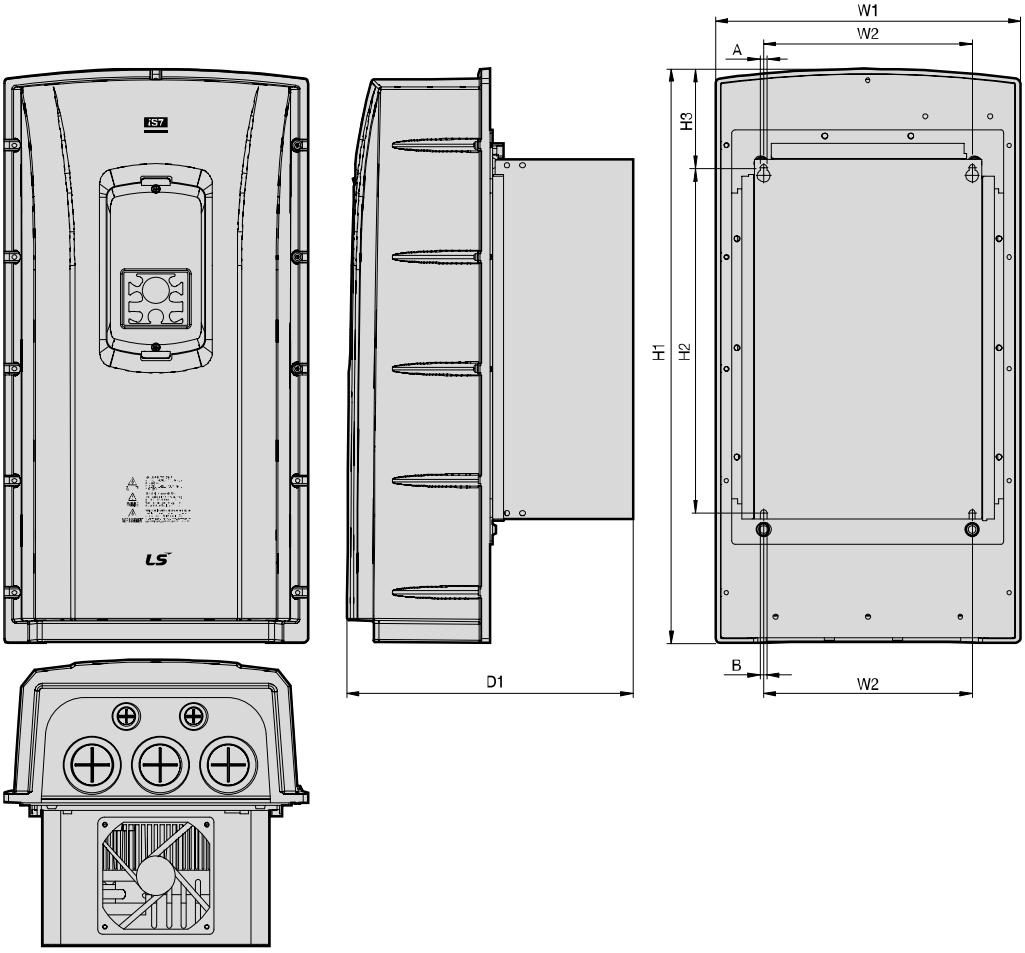

Units: mm (inch)

Inverter Capacity	W1	W2	H1	H2	H3	D1	A	B
SV0110–0150 iS7-2/4	313.1 (12.32)	214.6 (8.44)	590.8 (23.25)	355 (13.97)	101.7 (4.0)	294.4 (11.59)	6.5 (0.25)	6.5 (0.25)

SV0185-0220iS7 (200 V/400 V)

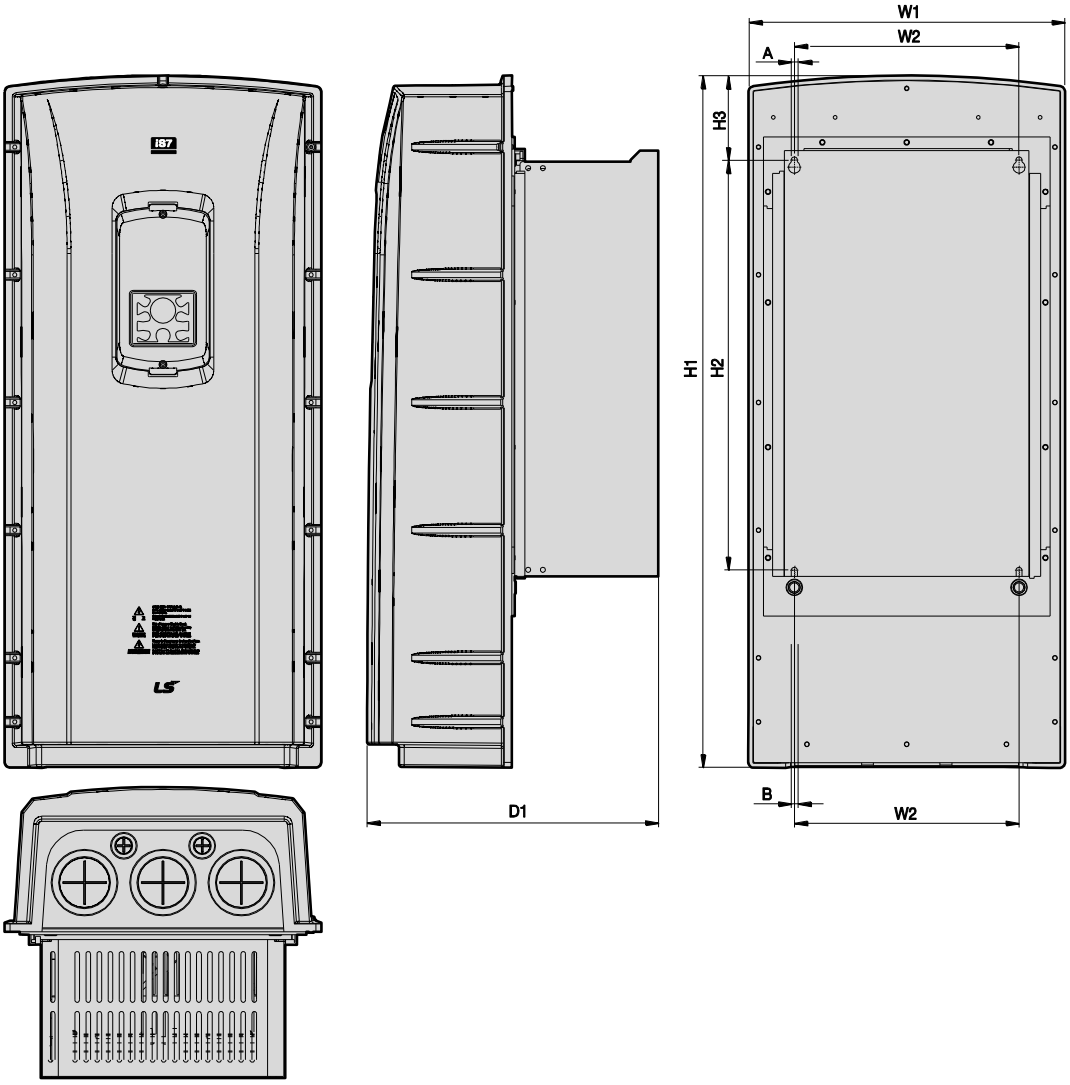

Units: mm (inch)

Inverter Capacity	W1	W2	H1	H2	H3	D1	A	B
SV0185–0220 iS7-2/4	343.2 (13.51)	243.5 (9.58)	750.8 (29.55)	445 (17.51)	91.6 (3.60)	315.5 (12.42)	6.5 (0.25)	6.5 (0.25)

3.5 Frame Dimensions and Weight (UL Enclosed Type 1, IP 21 Type)

Inverter Capacity	W[mm]	H[mm]	D[mm]	Weight[Kg] w/ built-in EMC and DCR	Weight[Kg] w/ built-in EMC	Weight[Kg] w/ built-in DCR	Weight[Kg] non-DCR types
SV0008iS7-2/4	150	284	200	5.5	4.5	5.0	4.5
SV0015iS7-2/4	150	284	200	5.5	4.5	5.0	4.5
SV0022iS7-2/4	150	284	200	5.5	4.5	5.0	4.5
SV0037iS7-2/4	150	284	200	5.5	4.5	5.0	4.5
SV0055iS7-2/4	200	355	225	10	8.4	9.3	7.7
SV0075iS7-2/4	200	355	225	10	8.4	9.3	7.7
SV0110iS7-2/4	250	385	284	20	17.2	16.8	14
SV0150iS7-2/4	250	385	284	20	17.2	16.8	14
SV0185iS7-2	280	461.6	298	30	27	25.9	22.9
SV0220iS7-2	280	461.6	298	30	25.8	25.9	22.9
SV0185iS7-4	280	461.6	298	27.4	23.5	23.3	19.7
SV0220iS7-4	280	461.6	298	27.4	23.5	23.5	20.1
SV0300iS7-2	300	570	265.2	-	-	-	29.5
SV0370iS7-2	370	630	281.2	-	-	-	44
SV0450iS7-2	370	630	281.2	-	-	-	44
SV0550iS7-2	465	750	355.6	-	-	-	72.5
SV0750iS7-2	465	750	355.6	-	-	-	72.5

Note

- The weight specified in the table indicates the total weight of the product without packaging, which includes the built-in parts, such as the EMC filter and DCR.
- The built-in EMC filter and DCR are not available for 30–75 kW (200 V) products.

Inverter Capacity	W[mm]	H[mm]	D[mm]	Weight[Kg] w/ built-in EMC and DCR	Weight[Kg] w/ built-in EMC	Weight[Kg] w/ built-in DCR	Weight[Kg] non-DCR types
SV0300iS7-4	300	594	300.4	-	-	41	28
SV0370iS7-4	300	594	300.4	-	-	41	28
SV0450iS7-4	300	594	300.4	-	-	41	28
SV0550iS7-4	370	663.4	371	-	-	63	45
SV0750iS7-4	370	663.4	371	-	-	63	45
SV0900iS7-4	510	784	423	-	-	101	-
SV1100iS7-4	510	784	423	-	-	101	-
SV1320iS7-4	510	861	423	-	-	114	-
SV1600iS7-4	510	861	423	-	-	114	-
SV1850iS7-4	690	1078	450	-	-	200	-
SV2200iS7-4	690	1078	450	-	-	200	-
SV2800iS7-4	771	1138	440	-	-	-	252
SV3150iS7-4	922	1302.5	495	-	-	-	352
SV3750iS7-4	922	1302.5	495	-	-	-	352

Note

- The weight specified in the table indicates the total weight of the product without packaging, which includes built-in parts, such as the EMC filter and DCR.
- 300-220 kW (400 V) products have built-in DCR only.
- 280-375 kW (400 V) products are provided without a built-in EMC filter and DCR.

3.6 Frame Dimensions and Weight (UL Enclosed Type 12, IP54 Type)

Inverter Capacity	W[mm]	H[mm]	D[mm]	Weight[Kg] w/ built-in EMC and DCR	Weight[Kg] w/ built-in EMC	Weight[Kg] w/ built-in DCR	Weight[Kg] non-DCR types
SV0008iS7-2/4	204	419	208	8.2	7.2	7.7	6.7
SV0015iS7-2/4	204	419	208	8.2	7.2	7.7	6.7
SV0022iS7-2/4	204	419	208	8.2	7.2	7.7	6.7
SV0037iS7-2/4	204	419	208	8.2	7.2	7.7	6.7
SV0055iS7-2/4	254	461	232	12.8	10.2	12.1	9.5
SV0075iS7-2/4	254	461	232	12.9	10.3	12.2	9.6
SV0110iS7-2/4	313	591	294	25.6	22.8	22.4	19.6
SV0150iS7-2/4	313	591	294	25.9	23.1	22.7	19.9
SV0185iS7-2	343	751	316	38.3	34.2	34.1	29.9
SV0220iS7-2	34	751	316	38.3	34.2	34.1	29.9
SV0185iS7-4	343	751	316	34.9	31	31	27.1
SV0220iS7-4	343	751	316	34.9	31	31	27.1

Note

- The weight specified in the table indicates the total weight of the product without packaging, which includes the built-in parts, such as the EMC filter and DCR.
- Only 0.75-22 kW products are available in IP 54 Type specifications.

3.7 Installation Procedures for UL Enclosed Type12 and IP54 Type Products

3.7.1 Disassembling the Keypad Cover and Keypad

1 Loosen the screws that secure the keypad cover and remove the keypad cover.

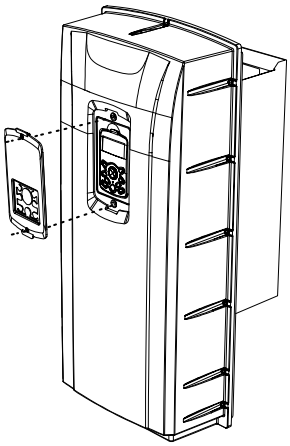

2 Depress the tab at the top of the keypad and gently lift the keypad from the inverter to remove it. Be careful not to damage the keypad cable.

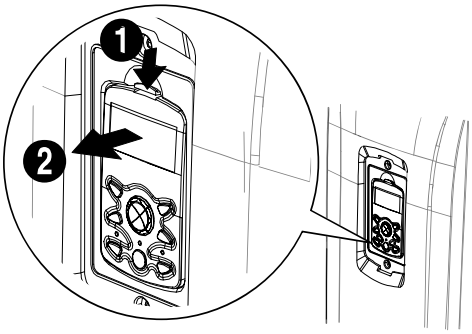

3 Depress the tab on the keypad cable connector and disconnect the cable from the back of the keypad.

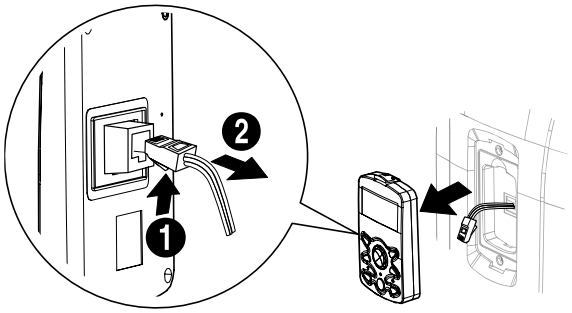

3.7.2 Disassembling the IP54 Front Cover

1 Loosen the screws that secure the front cover to the chassis. There are 9–13 screws on the cover depending on the model type.

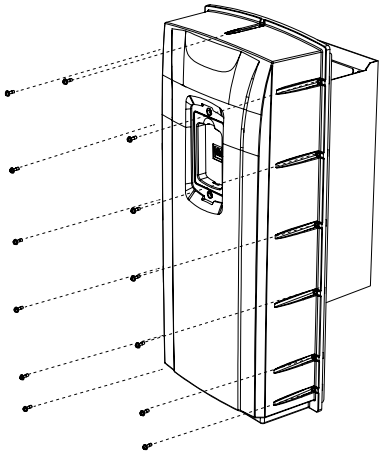

2 Remove the cover by lifting it upwards from the bottom.

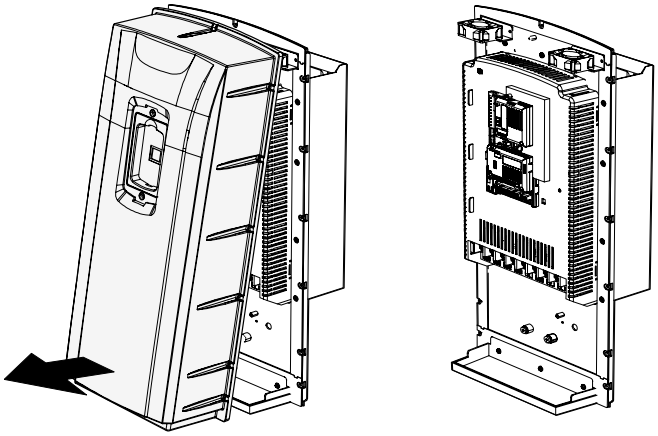

3.7.3 Mounting the Inverter

1 Remove the 4 rubber feet from the corners.

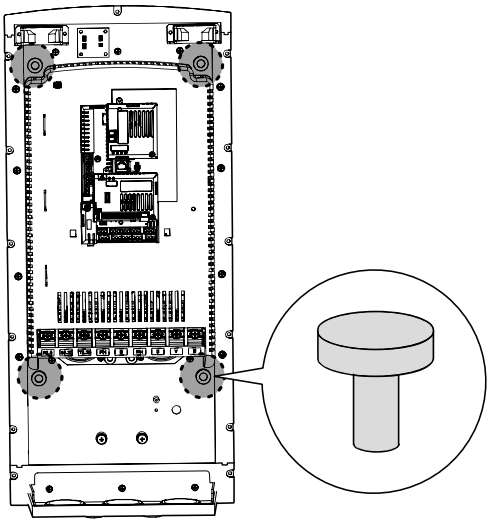

2 Place the inverter on a flat wall or in a cabinet, and use 4 screws or bolts to securely fix the inverter to the surface.

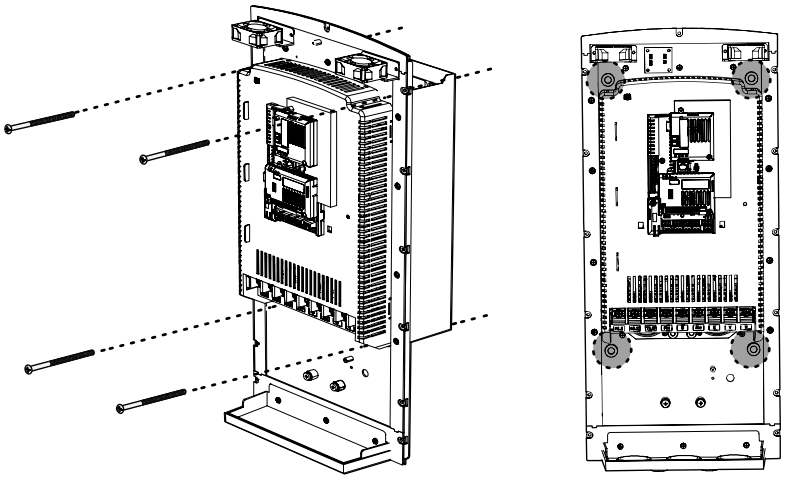

3.7.4 Connecting the Power Cables

Connect the power cables to the input (R, S, T) and output (U, V, W) terminals. Then, tighten the terminal screws.

Refer to *4 Connecting the Cables* on page *49* for detailed information.

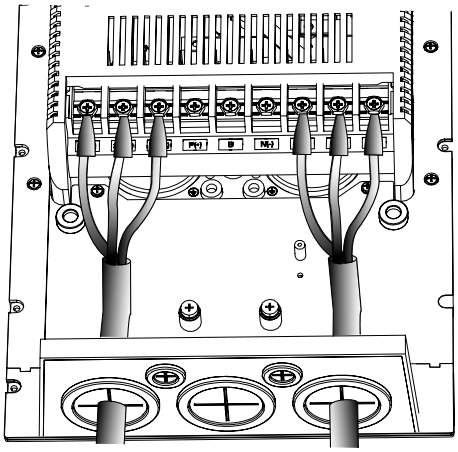

3.7.5 Reassembling the IP54 Front Cover and the Keypad

1 Place the front cover on the chassis and align the screw holes on each side.

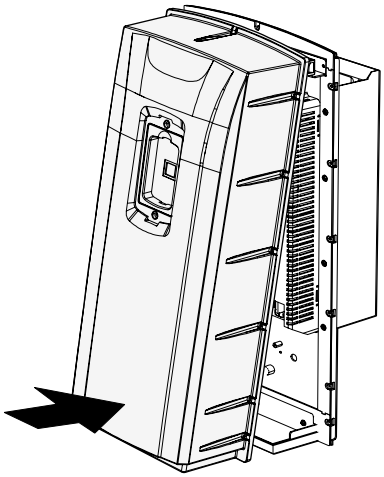

2 Insert and tighten the screws. There are 9–13 screws on the cover depending on the model type.

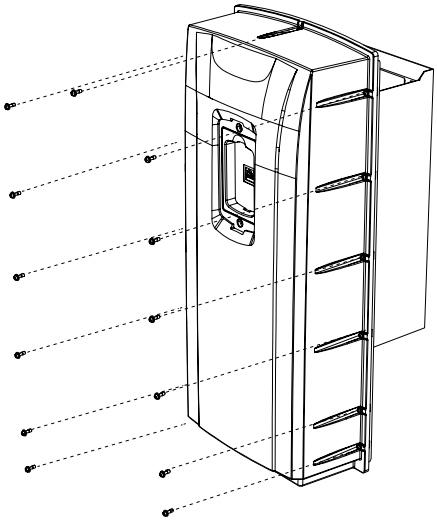

3 Connect the signal cable to the keypad, align the lower part of the keypad to the bottom of the keypad receptacle, and then push the top part of the keypad into the chassis until the keypad snaps into place.

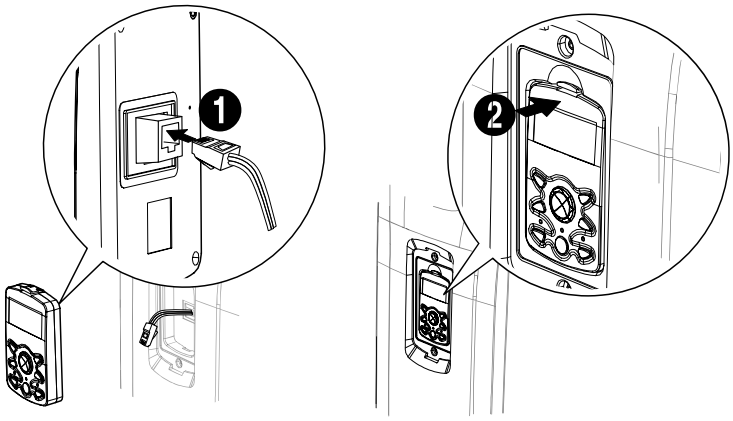

4 Place the keypad cover on top of the keypad, and secure it using 2 screws.

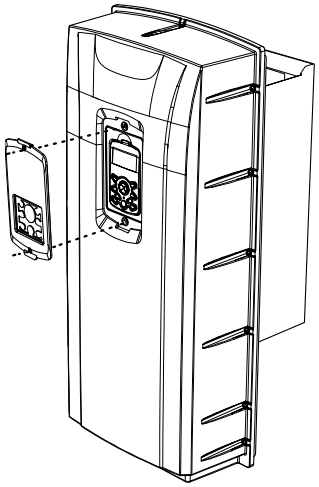

4 Connecting the Cables

Connect cables to the power and signal terminal blocks of the inverter.

Caution

ESD (Electrostatic discharge) from the human body may damage sensitive electronic components on the PCB. Therefore, be extremely careful not to touch the PCB or the components on the PCB with bare hands while you work on the I/O PCB.

To prevent damage to the PCB from ESD, touch a metal object with your hands to discharge any electricity before working on the PCB, or wear an anti-static wrist strap and ground it on a metal object.

4.1 Removing the Front Cover for Cable Connection

Danger

Wait at least 10 minutes before opening the covers and exposing the terminal connections. Before working on the inverter, test the connections to ensure the DC voltage has been fully discharged. Personal injury or death by electric shock may result if the DC voltage has not been discharged.

4.1.1 IP 21 Type Products

1 Depress the tab at the top of the keypad and gently lift the keypad from the inverter to remove it. Be careful not to damage the keypad cable.

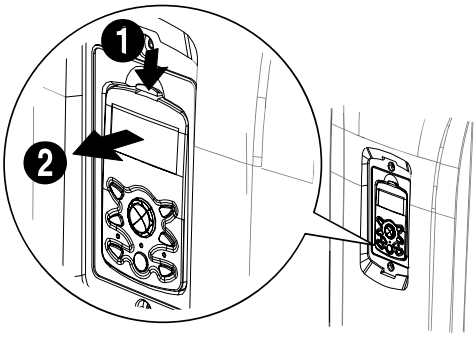

2 Depress the tab on the keypad cable connector and disconnect the cable from the back of the keypad.

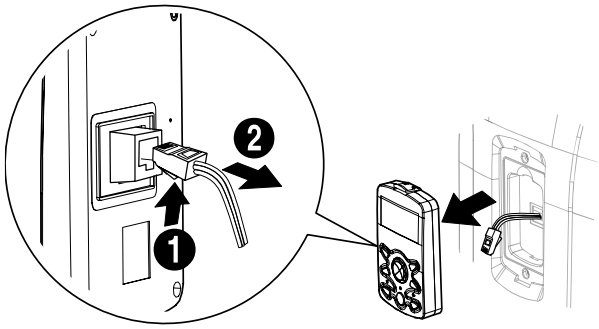

3 Loosen the screw from the bottom part of the front cover, and then remove the front cover.

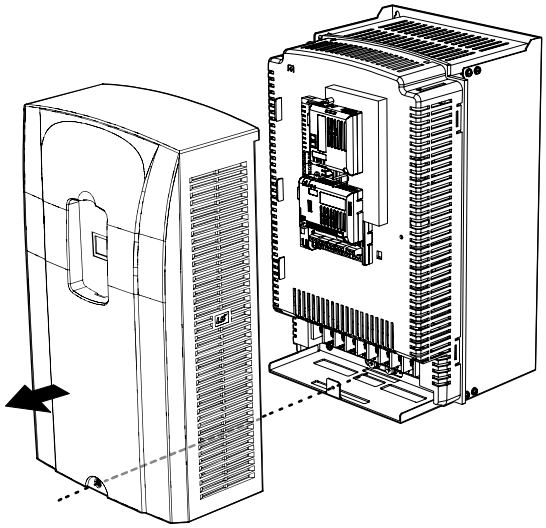

4.1.2 IP 54 Type Products

1 Loosen the two screws securing the keypad cover, and then remove the keypad cover.

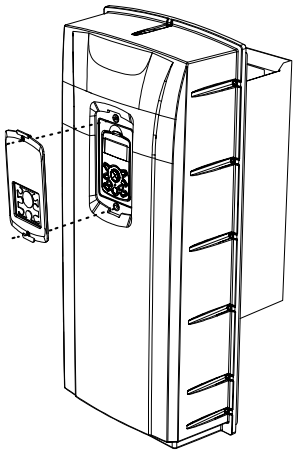

2 Depress the tab at the top of the keypad and gently lift the keypad from the inverter to remove it. Be careful not to damage the keypad cable.

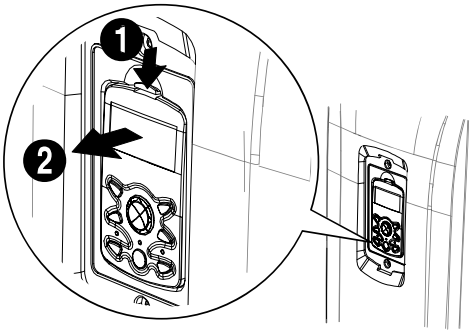

3 Depress the tab on the keypad cable connector and disconnect the cable from the back of the keypad.

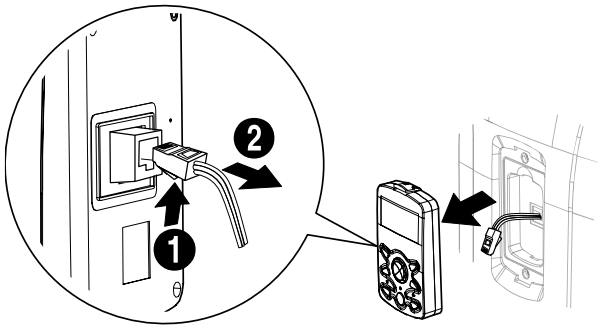

4 Remove the screws from each side of the front cover, and then remove the front cover.

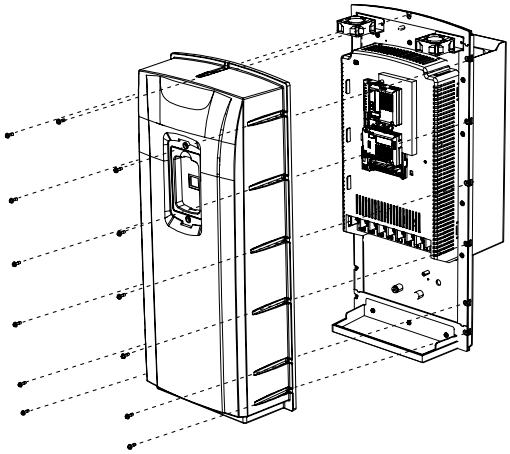

4.1.3 90–375 kW, 400 V and 30–75 kW, 200 V Products

1 Loosen the two screws on the front cover.

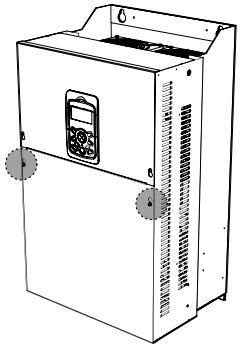

2 Slide the cover downwards and remove it from the inverter.

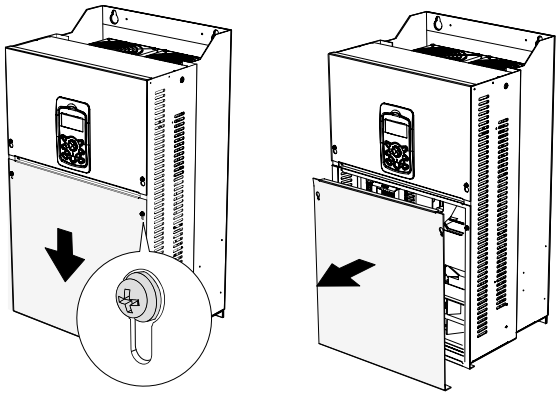

4.2 Activating and Deactivating the Built-in EMC Filter

Some iS-7 inverter models have built-in EMC filters to reduce conductive and radiational noise at the inverter input. Refer to *1.1.1 Identifying the Product* on page *1* and check your inverter's model type and specifications to see if it has a built-in EMC filter.
If your inverter has a built-in EMC filter, refer to the following instructions to activate or deactivate it.

Danger

Do not activate the EMC filter if the inverter uses a power source with an asymmetrical grounding structure, for example a grounded delta connection. Personal injury or death by electric shock may result if the power source is not grounded properly.

4.2.1 Up to 7.5 kW Inverters

1 Locate the plastic knockout cap that covers the EMC filter switch (jumper SW1).

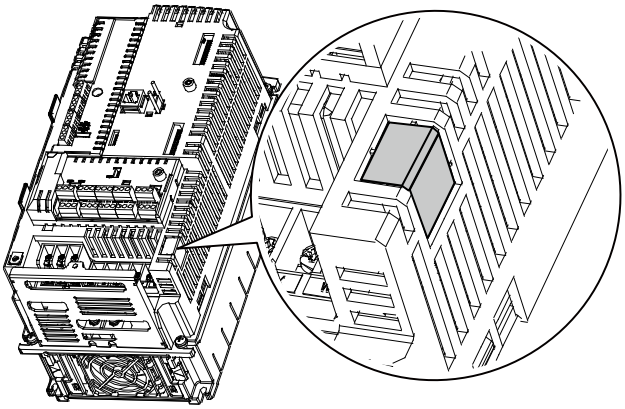

2 Remove the knockout cap and locate the jumper switch. The EMC filter will be deactivated if the two jumper pins are not connected.

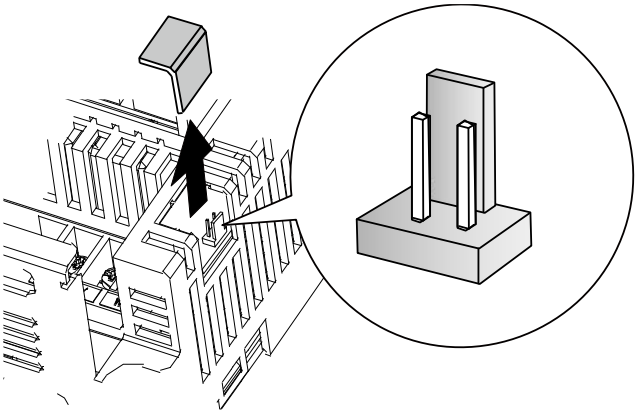

3 Connect the two jumper pins using a short circuit connector to activate the EMC filter.

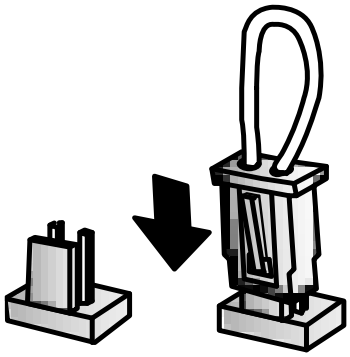

4 To remove the short circuit connector and deactivate the EMC filter, pull the connector while pressing the latch on the side of the connector. Use pliers or tweezers if you cannot reach the latch with your fingers.

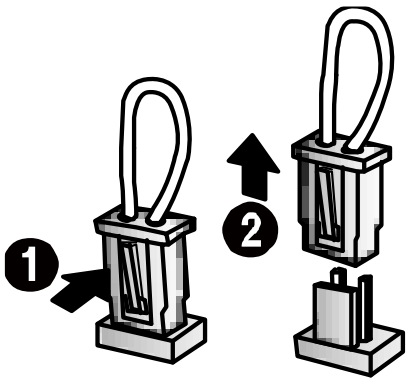

4.2.2 11–22 kW Inverters

1 Locate the EMC filter cable and the ground terminal at the bottom of the inverter.

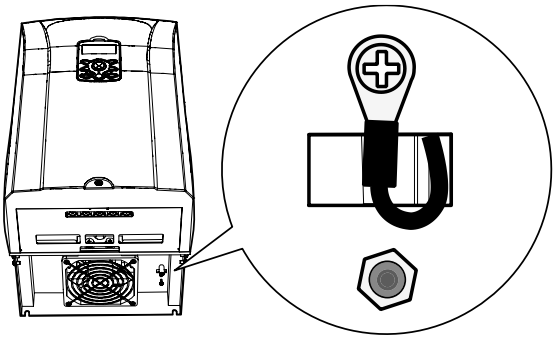

The EMC filter is deactivated if the EMC filter cable is connected to the insulated stud.

<EMC filter is turned OFF>

2 Remove the EMC filter cable from the insulated stud and connect it to the ground terminal (metal) to activate the EMC filter.

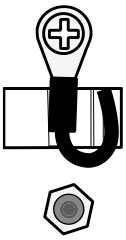

<EMC filter is turned ON>

An EMC filter prevents electromagnetic interference by reducing radio emissions from the inverter. Using an EMC filter is not always recommended, as it increases current leakage. If an inverter uses a power source with an asymmetrical grounding connection, the EMC filter must be turned off.

Before using the inverter, confirm the power supply's grounding system. Disable the EMC filter if the power source has an asymmetrical grounding connection.

Asymmetrical Grounding Connection			
One phase of a delta connection is grounded	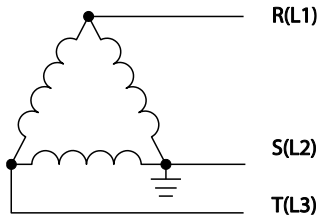	Intermediate grounding point on one phase of a delta connection	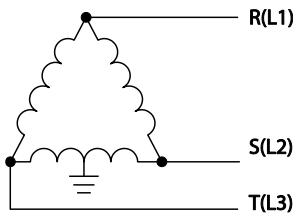
The end of a single phase is grounded	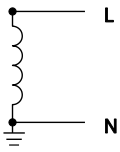	A 3-phase connection without grounding	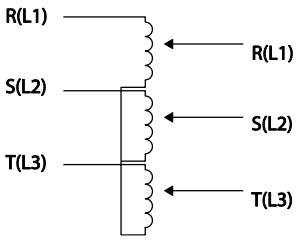

Note

• When the EMC Filter is deactivated, the Y-CAP is disconnected from Ground

4.3 Precautions for Wiring the Inverter

⚠ Warning

- Do not connect power to the inverter until installation has been fully completed and the inverter is ready to be operated. Doing so may result in electric shock.
- Wiring and inspection of wiring must be performed by an authorized engineer.

ⓘ Caution

- Install the inverter before connecting the cables.
- Ensure that no metal debris, such as wire clippings, remain inside the inverter. Metal debris in the inverter can cause inverter failure.
- Power supply cables must be connected to the R, S, and T terminals. Connecting power cables to other terminals will damage the inverter.
- Use insulated ring lugs when connecting cables to R/S/T and U/V/W terminals.
- The inverter's power terminal connections can cause harmonics that may interfere with other communication devices located near the inverter. To reduce interference, the installation of noise filters or line filters may be required.
- To avoid circuit interruption or damaging connected equipment, do not install phase-advanced condensers, surge protection, or electronic noise filters on the output side of the inverter.
- To avoid circuit interruption or damaging connected equipment, do not install magnetic contactors on the output side of the inverter.
- Make sure that the total cable length does not exceed 495 ft (150 m). For inverters < = 3.7 kW capacity, ensure that the total cable length does not exceed 165 ft (50 m). Long cable runs can cause reduced motor torque in low frequency applications due to voltage drop. Long cable runs also increase a circuit's susceptibility to stray capacitance and may trigger over-current protection devices or result in the malfunction of equipment connected to the inverter.
- Route the signal cables away from the power cables. Otherwise, signal errors may occur due to electric interference.
- Tighten terminal screws to their specified torques. Loose terminal block screws may allow the cables to disconnect and cause a short circuit or inverter failure. Refer to *4.7 Specifications of the Power Terminal Block and Exterior Fuse* on page *6666* for torque specifications.
- Do not place heavy objects on top of electric cables. Heavy objects may damage the cable and result in electric shock.
- Use cables with the largest cross-sectional area, appropriate for power terminal wiring, to ensure that voltage drops do not exceed 2%.
- Use copper cables rated at 600 V, 75℃ for power terminal wiring.
- Use copper cables rated at 300 V, 75℃ for control terminal wiring.
- If you need to rewire the terminals due to wiring-related faults, ensure that the inverter keypad display is turned off and the charge lamp under the terminal cover is off before working on wiring connections. The inverter may hold a high-voltage electric charge long after the power supply has been turned off.

4.4 Ground Connection

⚠ Warning

Install ground connections for the inverter and the motor by following the correct specifications to ensure safe and accurate operation. Using the inverter and the motor without the specified grounding connections may result in electric shock.

Caution

- Do not use the ground terminal as the signal (control) ground.
- Do not share the ground connection with other machines that consume a large amount of power, such as a welding machine.
- Connect the ground cable to the nearest earth contact and keep the cable length as short as possible.

Because the inverter is a high-frequency switching device, leakage current may occur during operation. To avoid the danger of electrocution due to current leakage, the inverter must be properly grounded. Ground connection must be made to the specified ground terminal on the inverter. Do not connect ground cables to chassis screws.

Note

- 200 V products require Class 3 grounding. Resistance to ground must be ≤ 100 Ω.
- 400 V products require Special Class 3 grounding. Resistance to ground must be ≤ 10 Ω.

The following table lists the minimum ground cable specifications that must be met to properly ground the inverters.

Inverter Capacity	Grounding wire size (mm^2)	
	200 V class	400 V class
0.75–3.7kW	4	2.5
5.5–7.5 kW	6	4
11–15 kW	16	10
18.5–22 kW	25	16
30–45 kW	25	16
55–75 kW	35	35
90–110 kW	-	60
132–220 kW	-	100
280–315 kW	-	185
375 kW	-	240

4.5 Terminal Wiring Diagram

4.5.1 Up to 7.5 kW Inverters

R (L1)	S (L2)	T (L3)						
3-phase AC input			**P (+)**	**B**	N (-)	**U**	**V**	**W**
			Dynamic braking resistor			To motor		

4.5.2 11–22 kW Inverters

R (L1)	S (L2)	T (L3)	P (+)	B	N (-)	U	V	W

4.5.3 30–75 kW Inverters

R (L1)	S (L2)	T (L3)	P1 (+)	P2 (+)	N (-)	U	V	W

4.5.4 90–160 kW Inverters

R (L1)	S (L2)	T (L3)	P2 (+)	N (-)	U	V	W

4.5.5 185–220 kW Inverters

R (L1)	S (L2)	T (L3)	P2 (+)	N (-)	U	V	W

4.5.6 280–375 kW Inverters

R (L1)	S (L2)	T (L3)	P1 (+)	P2 (+)	N (-)	U	V	W

Note

- Inverters with a rated capacity of 11 kW or more are equipped with linearly arranged terminal blocks.
- 0.75–22 kW inverters have built-in DC reactors. The installation of an external DC reactor is not necessary for these inverters.
- The inverter must be properly grounded using the ground terminal.

Note

If the forward command (Fx) is turned on, the motor should rotate counterclockwise when viewed from the load side of the motor. If the motor rotates in the reverse direction, switch the cables at the U and V terminals.

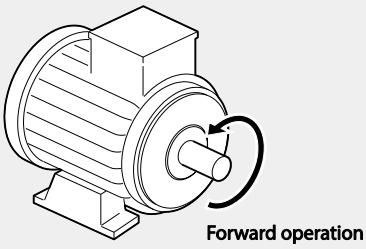

Remarque
Si la commande avant (Fx) est activée, le moteur doit tourner dans le sens anti-horaire si on le regarde côté charge du moteur. Si le moteur tourne dans le sens inverse, inverser les câbles aux bornes U et V.

4.6 Connecting Cables to the Power Terminal Block

Caution

Power supply cables must be connected to the R, S, and T terminals. Connecting power cables to other terminals will damage the inverter.

Note

The motor will rotate in the opposite direction if the U, V, and W terminals are connected in a wrong phase order.

4.6.1 0.75–22 kW (200 V/400 V)

Cable connection for utilizing the built-in dynamic braking unit

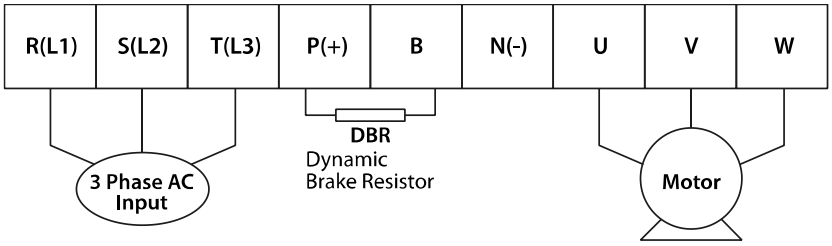

Connect the cables from the dynamic braking unit to the P (+) and B terminals to utilize the built-in dynamic braking unit.

Terminal Symbol	Terminal Name	Description
R (L1), S (L2), T (L3)	AC power supply input terminals	AC input terminals
P (+)	(+) DC voltage terminal	(+) DC link voltage terminal
N (-)	(-) DC voltage terminal	(-) DC link voltage terminal.
P (+), B	Dynamic braking resistor terminals	Dynamic braking resistor terminals
U, V, W	Inverter output terminals	Output terminals to a 3-phase induction motor

Cable connection for utilizing the optional dynamic braking unit

Connect the cables from dynamic braking unit to P (+) and N (-) terminals to utilize the optional dynamic braking unit. Do not connect cables to B terminal.

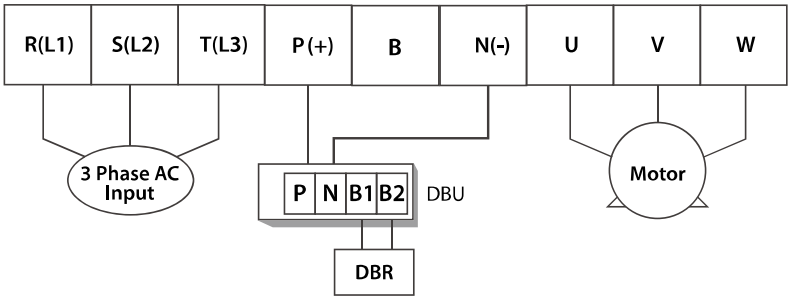

Terminal Symbol	Terminal Name	Description
R (L1), S (L2), T (L3)	AC power supply input terminals	AC input terminals
P (+)	(+) DC voltage terminal	(+) DC link voltage terminal
N (-)	(-) DC voltage terminal	(-) DC link voltage terminal.
P (+), B	Dynamic braking resistor terminals	Dynamic braking resistor terminals
U, V, W	Inverter output terminals	Output terminals to a 3-phase induction motor

4.6.2 30–75 kW (200 V/400 V)

Connect the cables from the dynamic braking unit to the P (+) and B terminals to utilize the built-in dynamic braking unit.

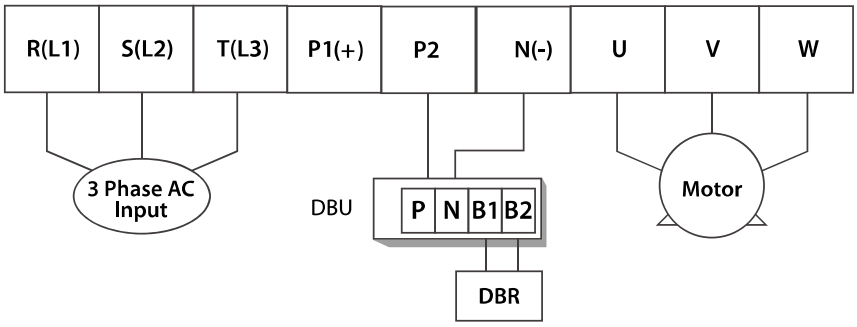

In 30-75 kW 200 V model types, the P1 and P2 terminals are connected with a jumper pin.

Terminal Symbol	Terminal Name	Description
R (L1), S (L2), T (L3)	AC power supply input terminals	AC input terminals

Terminal Symbol	Terminal Name	Description
P1 (+)	(+) DC voltage terminal	(+) DC link voltage terminal
P2, N (-)	Dynamic braking resistor terminal / DC common*	Dynamic braking resistor terminals
N (-)	(-) DC voltage terminal	(-) DC link voltage terminal
U, V, W	Inverter output terminals	Output terminals to a 3-phase induction motor

*Contact LSELECTRIC Customer Support before configuring the P2 (+) and N (-) terminals as the DC common source. There are a few factors that require special attention for this application.

Note

External DC reactors cannot be used with 30–75 kW inverters. To use a DC reactor with these inverters, purchase a 30–75 kW inverter that has a built-in DC reactor.

Caution

- When a built-in DCR unit is present, the P1 (+) and P (-) terminals are connected to the reactor's input and output terminals respectively.
- If your product does not have a built-in DCR unit, the P2 (+) and N (-) terminals may be used as the common DC source. Do not use the P1 (+) terminal as the common DC source, as this may result in product damage.
- Use the P2 (+) and N (-) terminals to connect a dynamic braking resistor to the inverter. Do not connect the dynamic braking unit to the P1 (+) terminal, as this may result in product damage.
- Contact LSELECTRIC Customer Support before configuring the N (-) terminal as the DC common source. There are a few factors that require special attention for this application.

4.6.3 90–160 kW (400 V)

Connect the cables from the dynamic braking unit to the P2 (+) and N (-) terminals to utilize an external dynamic braking unit.

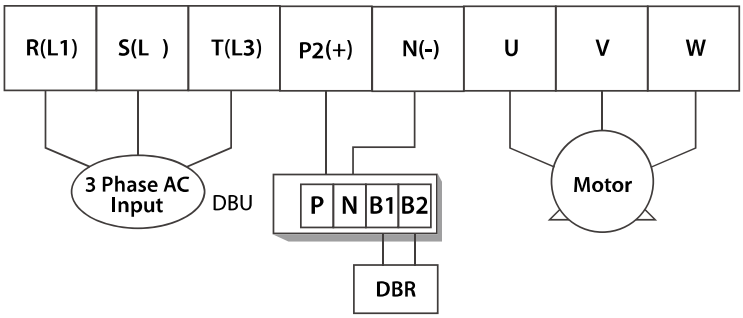

Terminal Symbol	Terminal Name	Description
R (L1), S (L2), T (L3)	AC power supply input terminals	AC input terminals
N (-)	(-) DC voltage terminal	(-) DC link voltage terminal
P2 (+), N (-)	Dynamic braking resistor terminal	Dynamic braking resistor terminals
U, V, W	Inverter output terminals	Output terminals to a 3-phase induction motor

4.6.4 185–220 kW (400 V)

Connect the cables from the dynamic braking unit to the P2 (+) and N (-) terminals to utilize an external dynamic braking unit.

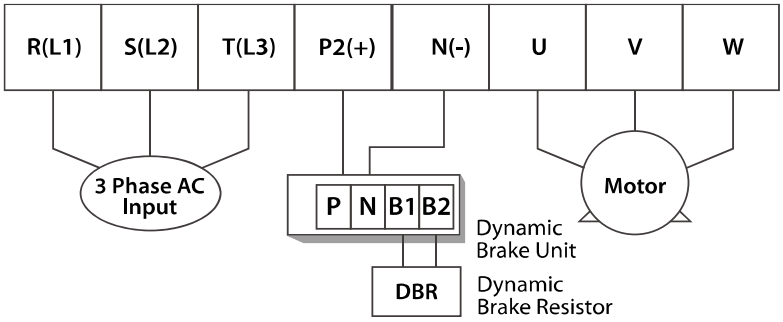

Terminal Symbol	Terminal Name	Description
R (L1), S (L2), T (L3)	AC power supply input terminals	AC input terminals
N (-)	(-) DC voltage terminal	(-) DC link voltage terminal
P2 (+), N (-)	Dynamic braking resistor terminal	Dynamic braking resistor terminals
U, V, W	Inverter output terminals	Output terminals to a 3-phase induction motor

4.6.5 280–375 kW (200 V/400 V)

Connect the cables from the dynamic braking unit to the P2 (+) and N (-) terminals to utilize the built-in dynamic braking unit.

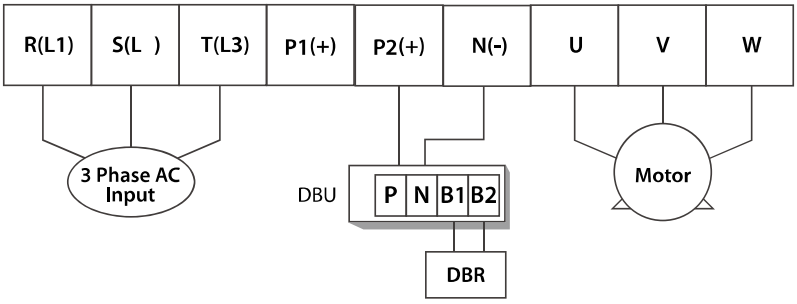

Terminal Symbol	Terminal Name	Description
R (L1), S (L2), T (L3)	AC power supply input terminals	AC input terminals
P1 (+)	(+) DC voltage terminal	(+) DC link voltage terminal
P2/N (-)	Dynamic braking resistor terminal / DC common*	Dynamic braking resistor terminals
N (-)	(-) DC voltage terminal	(-) DC link voltage terminal
U, V, W	Inverter output terminals	Output terminals to a 3-phase induction motor

*Contact LSELECTRIC Customer Support before configuring the P2 (+) and N (-) terminals as the DC common source. There are a few factors that require special attention for this application.

Caution

- Apply rated torques to the terminal screws. Loose screws may cause the terminals to short circuit and malfunction. Tightening the screws too much may damage the terminals and cause them to short circuit and malfunction.
- Only use copper wires with a 600 V, 75 ℃ rating for the power terminal wiring, and a 300 V, 75 ℃ rating for the control terminal wiring.
- Power supply wiring must be connected to the R, S, and T terminals. Connecting them to the U, V, W terminals causes internal damage to the inverter. The motor should be connected to the U, V, and W terminals. Arrangement of the phase sequence is not necessary.

4.7 Specifications of the Power Terminal Block and Exterior Fuse

Inverter capacity		Terminal screw size	Screw torque[1] (Kgf·cm)	Cable[2]				Exterior fuse	
				mm²		AWG or kcmil			
				R,S,T	U,V,W	R,S,T	U,V,W	Current	Voltage
200V	0.75 kW	M4	7.1–12	2.5	2.5	14	14	10 A	500 V
	1.5 kW	M4	7.1–12	2.5	2.5	14	14	15 A	500 V
	2.2 kW	M4	7.1–12	2.5	2.5	14	14	20 A	500 V
	3.7 kW	M4	7.1–12	4	4	12	12	32 A	500 V
	5.5 kW	M4	7.1–12	6	6	10	10	50 A	500 V
	7.5 kW	M4	7.1–12	10	10	8	8	63 A	500 V
	11 kW	M6	30.6–38.2	16	16	6	6	80 A	500 V
	15 kW	M6	30.6–38.2	25	25	4	4	100 A	500 V
	18.5 kW	M8	61.2–91.8	35	35	2	2	125 A	500 V
	22 kW	M8	61.2–91.8	50	50	1	1	160 A	500 V
	30 kW	M8	61.2 – 91.8	70	70	1/0	1/0	200 A	500 V
	37 kW	M8	61.2 – 91.8	95	95	2/0	2/0	250 A	500 V
	45 kW	M8	61.2 – 91.8	95	95	2/0	2/0	350 A	500 V
	55 kW	M10	89.7 – 122.0	120	120	3/0	3/0	400 A	500 V
	75 kW	M10	89.7 – 122.0	150	150	4/0	4/0	450 A	500 V
400V	0.75–1.5kW	M4	7.1–12	2.5	2.5	14	14	10 A	500 V
	2.2 kW	M4	7.1–12	2.5	2.5	14	14	15 A	500 V
	3.7 kW	M4	7.1–12	2.5	2.5	14	14	20 A	500 V
	5.5 kW	M4	7.1–12	4	2.5	12	14	32 A	500 V
	7.5 kW	M4	7.1–12	4	4	12	12	35 A	500 V
	11 kW	M5	24.5–31.8	6	6	10	10	50 A	500 V
	15 kW	M5	24.5–31.8	10	10	8	8	63 A	500 V
	18.5 kW	M6	30.6–38.2	16	10	6	8	70 A	500 V
	22 kW	M6	30.6–38.2	25	16	4	6	100 A	500 V
	30 kW	M8	61.2–91.8	25	25	4	4	125 A	500 V
	37 kW	M8	61.2–91.8	25	35	4	2	125 A	500 V
	45 kW	M8	61.2–91.8	50	50	1	1	160 A	500 V
	55 kW	M8	61.2–91.8	70	70	1/0	1/0	200 A	500 V
	75 kW	M8	61.2–91.8	95	95	2/0	2/0	250 A	500 V
	90 kW	M12	182.4–215.0	100	100	4/0	4/0	350 A	500 V
	110 kW	M12	182.4–215.0	100	100	4/0	4/0	400 A	500 V
	132 kW	M12	182.4–215.0	150	150	300	300	450 A	500 V
	160 kW	M12	182.4–215.0	200	200	400	400	450 A	500 V
	185 kW	M12	182.4–215.0	200	200	400	400	620 A	500 V
	220 kW	M12	182.4–215.0	250	250	500	500	800 A	500 V
	280 kW	M12	182.4–215.0	325	325	650	650	1000 A	500 V
	315 kW	M12	182.4–215.0	2x200	2x200	2x400	2x400	1200 A	500 V
	375 kW	M12	182.4–215.0	2x250	2x250	2x500	2x500	1400 A	500 V

1) Apply rated torques to the terminal screws. Loose screws may cause the terminals to short circuit and malfunction.

2) Only use copper wires with a 600 V, 75℃ rating for the power terminal wiring.

4.7.1 Cable Length between the Inverter and the Motor

The maximum cable lengths of the inverter and the motor are listed in <Table 1) Maximum cable length by inverter capacity>.

Make sure that the total cable length does not exceed 495 ft (150 m). For inverters with a capacity of less than 3.7 kW, ensure that the total cable length does not exceed 165 ft (50 m). Long cable runs can cause reduced motor torque in low frequency applications due to voltage drop. Long cable runs also increase a circuit's susceptibility to stray capacitance and may trigger over-current protection devices, or result in the malfunction of equipment connected to the inverter.

<Table 1) Maximum Cable Length by Inverter Capacity>

Inverter capacity	Up to 3.7 kW	5.5 kW or more
Maximum cable length	< 164 ft (50 m)	< 492 ft (150 m)

The following table lists maximum carrier frequencies available for model types with a rated capacity of 5.5 kW or more.

<Table 2) Maximum Carrier Frequency according to Cable Length>

Distance	< 165 ft (50 m)	< 330 ft (100 m)	> 330 ft (100 m)
Allowed Carrier Frequency	<15 kHz	<5 kHz	<2.5 kHz

Depending on the system layout and operating conditions at the installation site, high peak output voltage may result.

a) If the output peak voltage is too high even when the motor cable length is shorter than the maximum recommended cable length for the inverter capacity:
- use a motor with a high insulation rating.
- install an output circuit filter (micro surge filter).
- install a dv/dt filter, or a sine wave filter.

b) If the cable length is too long:
- use thicker cables to prevent voltage drop.
  [Voltage Drop (V) = [√3 X cable resistance (mΩ/m) X cable length (m) X current (A)] / 1000]
- do not use 3-core cables.
- use a lower carrier frequency.

4.7.2 Protective Measures for the Inverter and the Motor

The inverter output voltage pulse, regardless of the actual output frequency, is identical to the DC link voltage pulse, which has a very short rising time. When the power is transmitted through the output cables, the output peak voltage can rise up to twice the total DC link voltage (2.8 times the main power voltage).

If a switching device (a magnetic contactor or relay) is connected to the output side of the inverter, high-voltage surges may result whenever a switch is made, regardless of the length of the motor cable.

Such high-voltage surges can damage the inverter's output components (such as the current sensor), motor cables, and the motor itself. To protect the inverter and the motor from such damage caused by a high-voltage surge, do not install switching devices in the output side of the inverter. You can install an output reactor, dv/dt filter, or sine wave filter to protect the inverter and motor from a surge voltage.

An output surge with a high switching frequency and fast rising time causes a motor shaft current that runs through the motor bearing. It slowly corrodes the surface of the motor bearing, eventually seizing up the motor.

To decrease the motor shaft current and protect the motor insulation, refer to <Table 1) Maximum cable length by inverter capacity>. Install a dv/dt filter or sine wave filter if possible, regardless of the length of the motor cable.

Caution

Only use Class H or RK5 UL listed input fuses and UL listed breakers. See the table above for the voltage and current ratings for the fuses and breakers.
Utiliser UNIQUEMENT des fusibles d'entrée homologués de Classe H ou RK5 UL et des disjoncteurs UL. Se reporter au tableau ci-dessus pour la tension et le courant nominal des fusibless et des disjoncteurs.

4.8 Control Terminal Wiring for iS7 Inverters Rated for Up To 22 kW

The iS7 inverter supports both PNP (Source) and NPN (Sink) modes for sequence inputs at the terminal. Select an appropriate mode to suit your requirements using the PNP/NPN selection switch above the control terminal block. Refer to the following information for detailed applications.

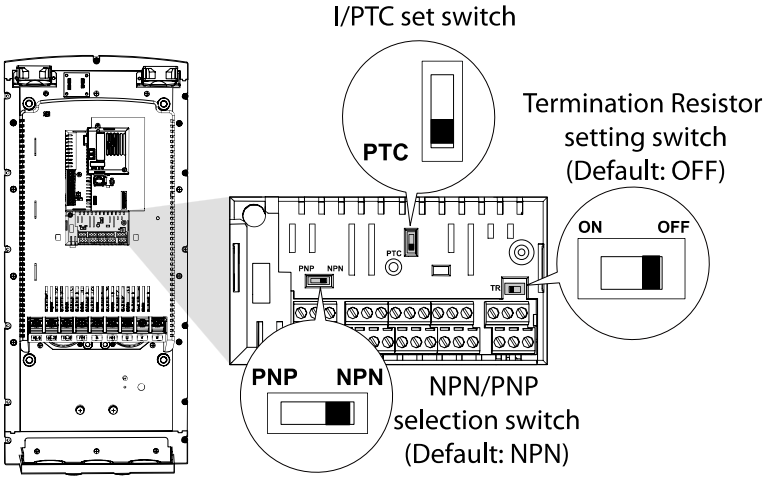

4.8.1 NPN Mode (Sink)

Select NPN using the PNP/NPN selection switch. The factory default setting is NPN mode. CM (24V GND) is the common ground terminal for all terminal inputs.

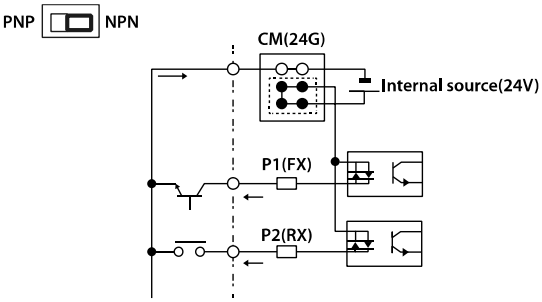

4.8.2 PNP Mode (Source)

Select PNP using the PNP/NPN selection switch. The factory default setting is NPN mode. CM (24 V GND) is the common ground terminal for all terminal inputs, and 24 is the 24 V internal source. If you are using an external 24 V source, select PNP (sink) mode and build a circuit that connects the external source (-) and the CM terminal.

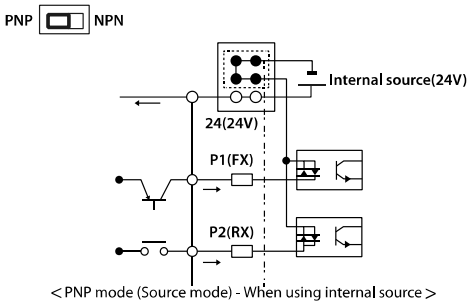

<PNP mode (Source mode) - When using internal source>

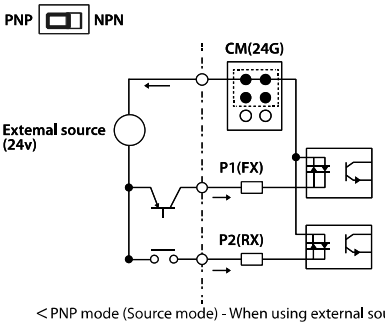

<PNP mode (Source mode) - When using external source>

4.8.3 0.75–22 kW (Basic I/O)

Wiring Examples

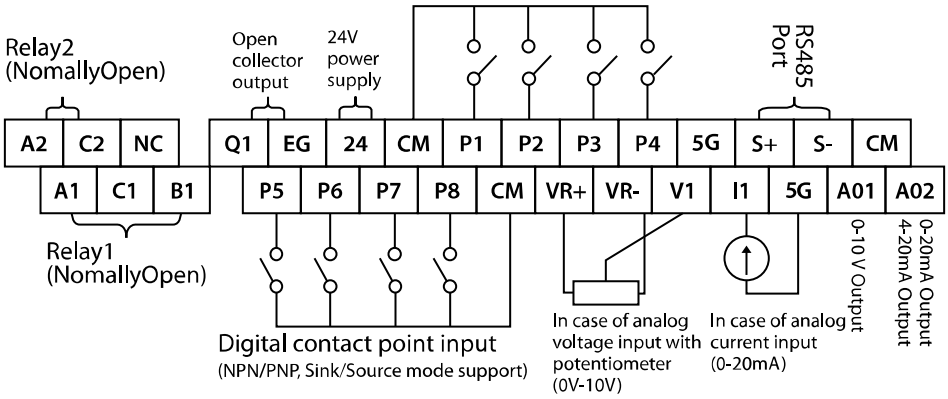

Default Functions Assigned for the Multi-Function Terminals

P1	P2	P3	P4	P5	P6	P7	P8
FX	RX	BX	RST	Sp-L	Sp-M	Sp-H	JOG

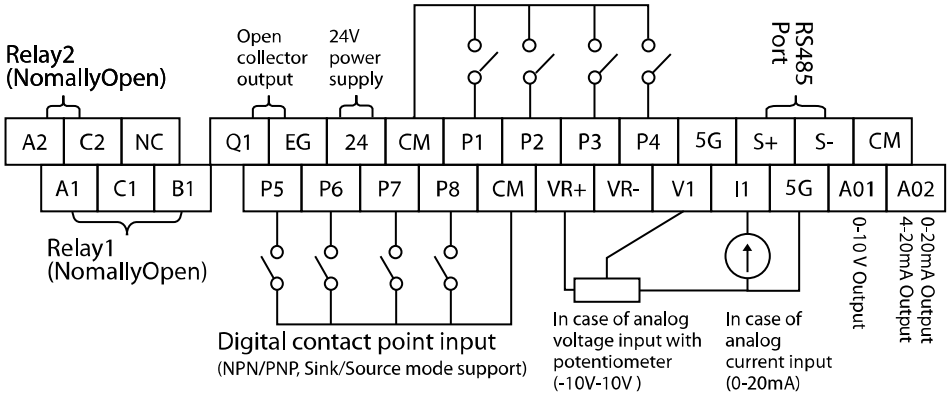

Note

- The TR (termination resistor) switch is used to terminate the RS485 network connection (120 Ω). Please turn on the TR switch of the last positioned Drive and turn off the TR switch of the remaining drives.
- For analog voltage input, use a potentiometer rated at 0.5W, 1kOhm.
- Refer to *8 Table of Functions* on page *157* for the multi-function terminal configurations.

4.9 Control Terminal Wiring for iS7 Inverters Rated for 30 kW or More

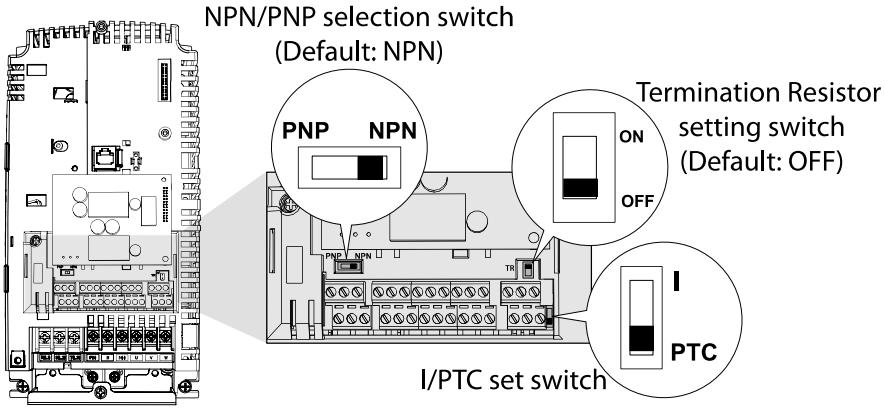

30–375 kW (control terminal block)

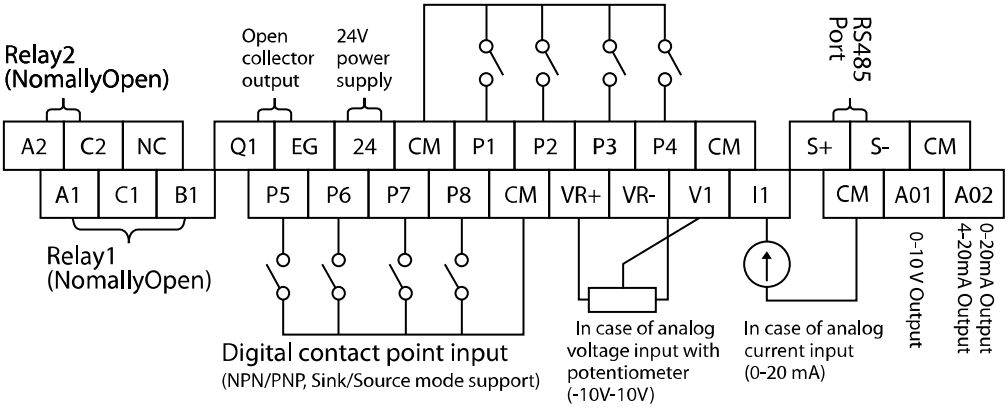

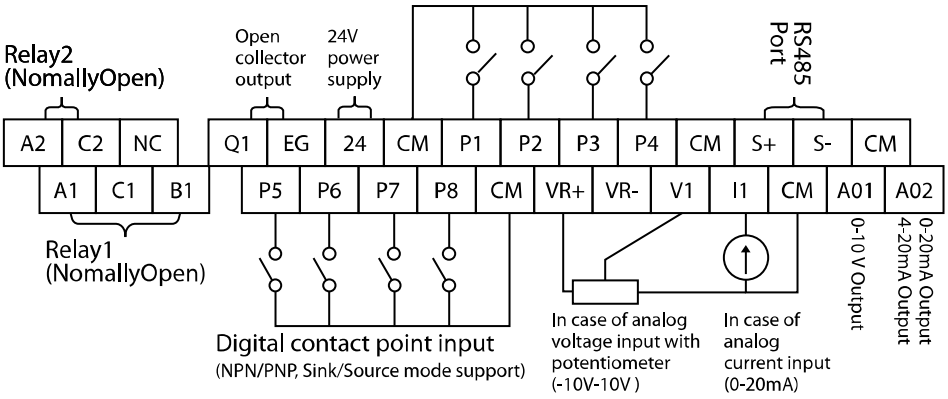

Note

- The TR (termination resistor) switch is used to terminate the RS485 network connection (120 Ω). Please turn on the TR switch of the last positioned Drive and turn off the TR switch of the remaining drives.
- Use a potentiometer rated for 0.5 W, 1 kΩ.

If the analog voltage (V) or current (I) input is used to set the frequency reference, the analog input is reflected when the input is actually received. For instance, the voltage input 0 V at V1 does not indicate that no input is received at V1, but it means that 0 V input is actually received at V1.

Note

When you use the analog voltage input, the bipolar input range (-10 – +10V), in comparison to the unipolar input range (0–10V), allows for more accurate input control with smaller increments.

Caution

If the analog input is interrupted when setting a frequency reference using the analog voltage (V) input and no voltage input is received at the terminal, an offset voltage may be applied to keep the frequency reference at approximately 4–5 Hz.

4.10 Terminal Inputs for Inverter Operation

Input Type		Symbol	Name	Description
Input signal	Terminal input	P1–P8	Multi-function input1–8	Configurable for multi-function input terminals. Refer to *8 Table of Functions* on page *157* for the multi-function terminal configurations.
		CM	Common sequence	Common terminal for terminal inputs (5G common terminal is used for analog frequency inputs only).
	Analog input	VR(+)	Potentiometer frequency reference (+)	Used to setup or modify a frequency reference via the analog voltage or current input. Maximum output is +12 V, 100 mA.
		VR(-)	Potentiometer frequency reference (-)	Used to setup or modify a frequency reference via the analog voltage or current input. Maximum output is -12 V, 100 mA.
		V1	Voltage input for frequency reference	Used to setup or modify a frequency reference via the analog voltage input terminal. Unipolar: 0–10 V Bipolar: -10–10 V Input resistance 20 kΩ
		I1	Current input for frequency reference	Used to setup or modify a frequency reference via the current input terminals. Input current: DC 0–20 mA Input resistance 249 Ω

Input Type		Symbol	Name	Description
		5G	Frequency setting common terminal	Common terminal for analog voltage and current terminals (CM common terminal is used for terminal inputs only).
Output Signal	Analog output	AO1	Multi-function analog voltage output terminal	Used to send inverter output information to external devices. Output voltage: 0–10 V Maximum output voltage: 10 V Maximum output current: 10 mA
		AO2	Multi-function analog current output terminal	Used to send inverter output information to external devices. Output current: 4–20 mA (0–20 mA) Maximum output current: 20 mA
	Terminal output	Q1	Multi-function terminal (open collector)	DC 26 V, below 100 mA
		EG	Common terminal for open collector	Common ground contact for an open collector (with external power source).
		24	24 V power source	Maximum output current: 150 mA
		CM	24 V common	Common ground contact for the external 12 V power source.
		A1, B1,C1	Fault signal output	Sends out alarm signals when the inverter's safety features are activated ((N.O.)below AC 250 V 5 A, DC 30 V 5 A, (N.C.)below AC 250 V 3 A,DC 30 V 3 A). Fault condition: A1 and C1 contacts are connected (B1 and C1 open connection) Normal operation: B1 and C1 contacts are connected (A1 and C1 open connection)
		A2, C2	Multi-function relay2 output A contact	Outputs the signal while running. User defined multi-function output terminal. (< AC 250 V, 5 A / < DC 30 V, 5 A)
		S+,S-,CM	RS-485 signal line	Used to send or receive RS-485 signals.

4.11 Cable Specifications for Control Block Wiring

Terminal Name		Cable size[1]		Specifications
		mm²	AWG	
P1–P8	Multi-function input terminal	0.33–1.25	16–22	-
CM	Common terminal input (5G common is used for analog frequency inputs only).			Common earth for multi-function input terminal
VR+	Analog frequency setting (+) power			Output voltage: +12 V Maximum output voltage: 100 mA
VR-	Analog frequency setting (-) power			Output voltage: -12 V Maximum output voltage: 100 mA
V1	Multi-function analog voltage input terminal			Input voltage: 0–10 V or -10–10 V
I1	Multi-function analog current input terminal			0–20 mA input Internal resistance: 249 Ω
AO1	Multi-function analog voltage output terminal	0.33–2.0	14–22	Maximum output voltage: 10 V Maximum output current: 10 mA
AO2	Multi-function analog current output terminal			Maximum output current: 20 mA
5G	Frequency setting common terminal (CM common terminal is used for terminal inputs only).			Common terminal of analog frequency setting signal and analog current and voltage terminals
Q1	Multi-function terminal (open collector)			DC 26 V, below 100 mA
EG	Ground terminal for external power			Common terminal for an open collector external power source
24	24 V power supply	0.33–1.25	16–22	Maximum output current: 150 mA
CM	24 V common			Common terminal for external 24 V power source
A1	Multi-function relay 1 output A	0.33–2.0	14–22	(N.O.)Below AC 250 V/5 A, Below DC 30 V/5 A
B1	Multi-function relay 1 output B			(N.C.)Below AC 250 V/3 A, Below DC 30 V/3 A
C1	Multi-function relay 1 common terminal			(N.O.)Below AC 250 V/5 A, Below DC 30 V/5 A (N.C.)Below AC 250 V/3A, Below DC 30 V/3A
A2	Multi-function relay 2 output A			Below AC 250 V/5 A, Below DC 30 V/5 A
C2	Multi-function relay 2 common terminal			Below AC 250 V/5 A, Below DC 30 V/5 A
S+,S-	RS485 signal input terminal	0.75	18	RS485 signal line
CM	RS485 common terminal			For multi-connections, RS485 power ground (shield) connection terminal

1) Use shielded, twisted-pair cables.

4.12 Control Terminal Wiring for iS7 Extension I/O (Optional)

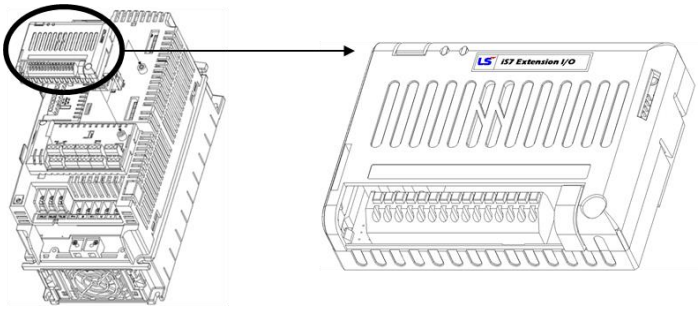

Extension I/O (control terminal block)

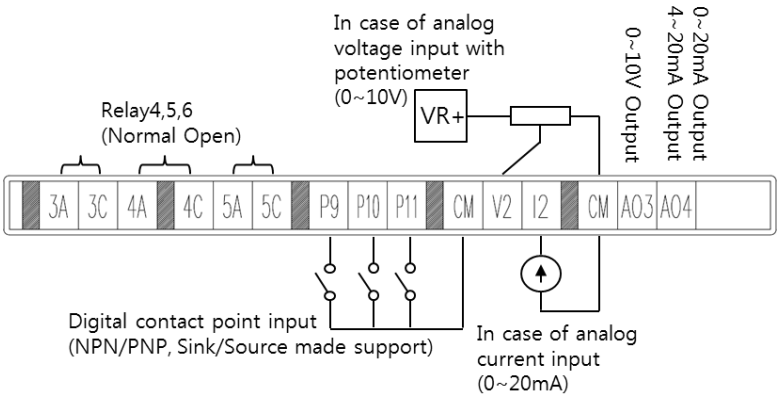

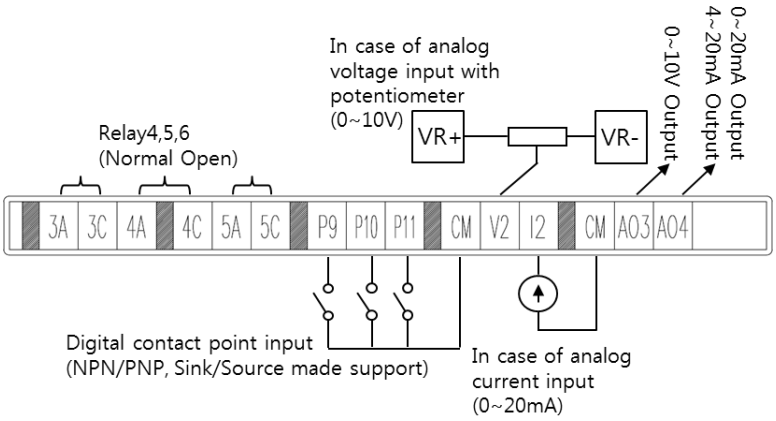

4.13 Terminal Inputs for Inverter Operation

Input Type		Symbol	Name	Description
Input signal	Terminal input	P9–P11	Multi-function input9–11	Configurable for multi-function input terminals. Refer to *8 Table of Functions* on page *157* for the multi-function terminal configurations.
		CM	Common sequence	Common terminal for terminal inputs (5G common terminal is used for analog frequency inputs only).
	Analog input	V2	Voltage input for frequency reference	Used to setup or modify a frequency reference via the analog voltage input terminal. Unipolar: 0–10 V Bipolar: -10–10 V Input resistance 20 kΩ
		I2	Current input for frequency reference	Used to setup or modify a frequency reference via the current input terminals. Input current: DC 0–20 mA Input resistance 249 Ω
Output Signal	Analog output	AO3	Multi-function analog voltage output terminal	Used to send inverter output information to external devices. Output voltage: 0–10 V Maximum output voltage: 10 V Maximum output current: 10 mA
		AO4	Multi-function analog current output terminal	Used to send inverter output information to external devices. Output current: 4–20 mA (0–20 mA) Maximum output current: 20 mA
	Terminal output	3A, 3C	Multi-function relay3 output A contact	Outputs the signal while running. User defined multi-function output terminal. (< AC 250 V, 5 A / < DC 30 V, 5 A)
		4A, 4C	Multi-function relay4 output A contact	
		5A, 5C	Multi-function relay5 output A contact	
		CM	External 24 V common	Common ground contact for the external 24V power source.

4.14 Cable Specifications for Control Block Wiring

Terminal Name		Cable size[1)]		Specifications
		mm²	AWG	
P9–P11	Multi-function input terminal	0.33–1.25	16–22	-
CM	Common terminal input (5G common is used for analog frequency inputs only).			Common earth for multi-function input terminal
V2	Multi-function analog voltage input terminal			Input voltage: 0–10 V or -10–10 V
I2	Multi-function analog current input terminal			0–20 mA input Internal resistance: 249 Ω
AO3	Multi-function analog voltage output terminal			Maximum output voltage: 10 V Maximum output current: 10 mA
AO4	Multi-function analog current output terminal			Maximum output current: 20 mA
CM	24 V common			Common terminal for external 24 V power source
3A	Multi-function relay 3 output A			Below AC 250 V/5 A, Below DC 30 V/5 A
3C	Multi-function relay 3 common terminal			Below AC 250 V/5 A, Below DC 30 V/5 A
4A	Multi-function relay 4 output A			Below AC 250 V/5 A, Below DC 30 V/5 A
4C	Multi-function relay 4 common terminal			Below AC 250 V/5 A, Below DC 30 V/5 A
5A	Multi-function relay 5 output A			Below AC 250 V/5 A, Below DC 30 V/5 A
5C	Multi-function relay 5 common terminal			Below AC 250 V/5 A, Below DC 30 V/5 A

2) Use shielded, twisted-pair cables.

4.15 Setting the Built-in Surge Filter

The iS7 series inverters have a built-in surge filter between the input phases and the ground connection to absorb and mitigate surge current. This filter consists of a Y-CAP and multiple varistors.

However, in a non-grounded power system where specific ground faults occur frequently, adequate measures are required to avoid inverter damage.

Refer to the following table for details on how to prevent damage to specific power systems.

Power supply system and ground type	Varistors and Y-CAP connection	Effect
Directly grounded system	2-pin connector (on)	Reduced voltage stress and noise
Non-grounded or impedance ground system	2-pin connector (off)	Reduced risk of inverter damage if ground fault occurs

Note

Not EMC Filter built-in type 0.75–22 KW (200/400 V) products do not support this function.

Caution

- You can deactivate the built-in surge filter if there is no risk of surge voltage occurring in the system.
- In order to prevent accidents, remove the jumper switch after the internal voltage of the inverter is completely discharged.

4.16 Activating or Deactivating the Surge Filter

4.16.1 iS7 30–75KW (400 V) Inverters

Contact LSELECTRIC Customer Support and ask for assistance to deactivate the built-in surge filter for the 30–75 KW (400 V) inverters.

4.16.2 iS7 90–375 kW (400V) Inverters

Remove the keypad and the screws from the front cover, and then remove the front cover.

Caution

Be careful not to open the front cover with the keypad attached, as this can damage the keypad cable.

Refer to the figure below and locate the SCR snubber board. On the circuit board, activate or deactivate the surge filter by connecting the two jumper pins or breaking the connection between the two pins using a jumper plug. The filter is turned on when the jumper plug is installed, and it is turned off when the jumper plug is removed.

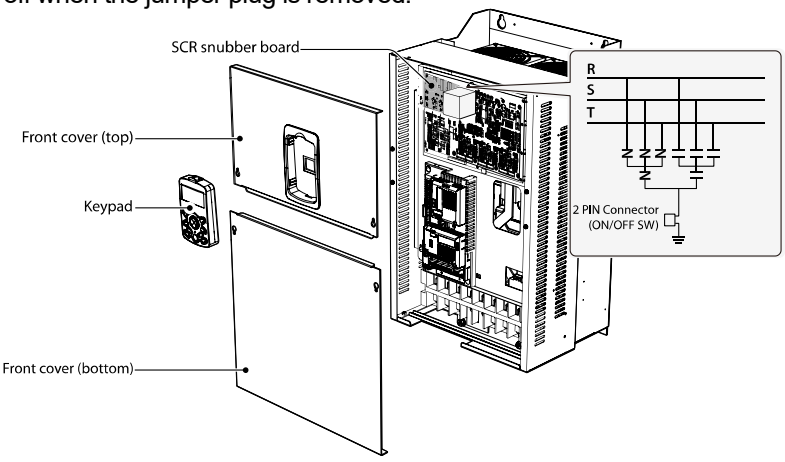

<Removing the front cover (Ex: 90–160 KW)>

Refer to the following figures to locate the jumper switch on the SCR snubber board and install or remove the jumper cap to activate or deactivate the built-in surge filter.

SV900-1600iS7 (400 V)

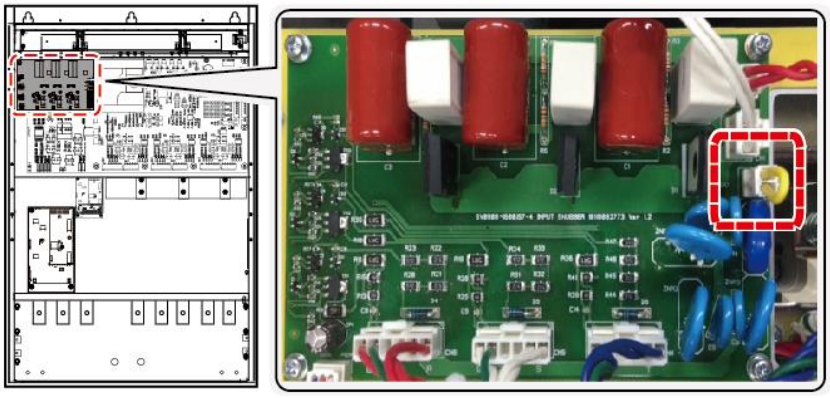

SV1850-2200iS7 (400 V)

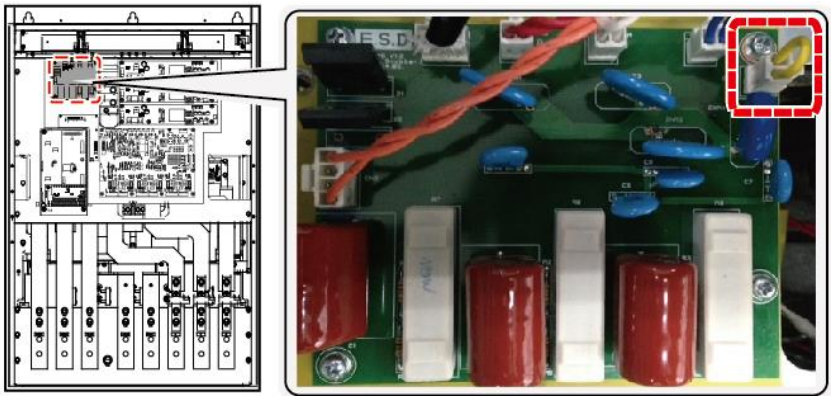

SV2800-3750iS7 (400 V)

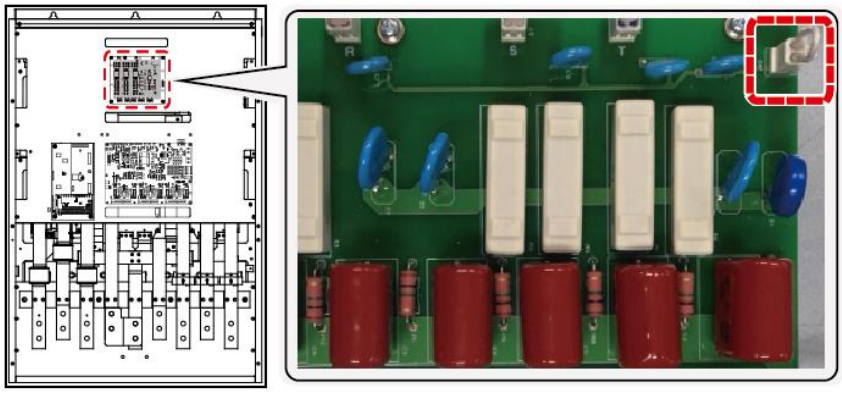

4.17 Post-Installation Checklist

After completing the installation, check the items in the following table to make sure that the inverter has been safely and correctly installed.

Items	Check Point	Result
Installation Location/Power I/O Verification	Is the installation location appropriate?	
	Does the environment meet the inverter's operating conditions?	
	Does the power source match the inverter's rated input?	
	Is the inverter's rated output sufficient to supply the equipment? (Certain circumstances will result in degraded performance.	
Power Terminal Wiring	Is a circuit breaker installed on the input side of the inverter?	
	Is the circuit breaker correctly rated?	
	Are the power source cables correctly connected to the R/S/T terminals of the inverter? (Caution: connecting the power source to the U/V/W terminals may damage the inverter.)	
	Are the motor output cables connected in the correct phase rotation (U/V/W)? (Caution: motors will rotate in the reverse direction if three-phase cables are not wired in the correct phase rotation.)	
	Are the cables used in the power terminal connections correctly rated?	
	Is the inverter grounded correctly?	
	Are the power terminal screws and the ground terminal screws tightened to their specified torques?	
	Are the overload protection circuits installed correctly on the motors (if multiple motors are run using one inverter)?	
	Is the inverter separated from the power source by a magnetic contactor (if a braking resistor is in use)?	
	Are advanced-phase capacitors, surge protection, and electromagnetic interference filters installed correctly? (These devices MUST not be installed on the output side of the inverter.)	
Control Terminal Wiring	Are STP (shielded twisted pair) cables used for control terminal wiring?	
	Is the shielding of the STP wiring properly grounded?	
	If 3-wire operation is required, are the multi-function input terminals defined prior to the installation of the control wiring connections?	
	Are the control cables properly wired?	
	Are the control terminal screws tightened to their specified torques?	
	Is the total cable length of all control wiring < 328 ft (100 m) for model types	

Items	Check Point	Result
	rated at 3.7 kW and below, and 984 ft (300 m) for model types rated at more than 3.7 kW?	
	Is the total length of safety wiring < 100 ft (30 m)?	
Miscellaneous	Are optional modules connected correctly?	
	Is there any debris left inside the inverter?	
	Are any cables contacting adjacent terminals, creating a potential short circuit risk?	
	Are the control terminal connections separated from the power terminal connections?	
	Have the capacitors been replaced if they have been in use for > 2 years?	
	Has a fuse been installed for the power source?	
	Are the connections to the motor separated from other connections?	

Note

STP (Shielded Twisted Pair) cables have a highly conductive, shielded screen around twisted-pair cables. STP cables protect conductors from electromagnetic interference.

4.18 Test Run

When you turn on the iS7 inverter for the first time, it starts in Easy Start mode to help you configure the basic parameters required for inverter operation.

4.18.1 Entering Easy Start Mode

The inverter starts in Easy Start mode when you turn on the inverter for the first time, or when the inverter is turned on following a parameter initialization.

Note

- Before setting the parameter values for a user application, initialize the parameter settings to make sure that the default setting is applied to all parameters.
- If you initialized all parameters after an inverter trip occurred, the inverter starts in Easy Start mode after it is reset, regardless of the pending trip condition.
- Easy Start mode is not available while the inverter is already running.

4.18.2 Setting the Basic Parameters in Easy Start Mode

Refer to the following sequence table to understand the Easy Start sequence and configure the basic parameters according to the instructions.

Sequence	Instruction
Start Easy Set	Select “Yes” to start the inverter in Easy Start mode (select “No” to start the inverter in Monitor mode).
CNF-01 Language Sel	Select the keypad display language (only English is available at the moment).
DRV-14 Motor Capacity	Set the motor capacity. (Ex: 0.75 kW, 1.5 kW)
BAS-11 Pole Number	Set the number of poles in the motor.
BAS-15 Rated Volt	Set the rated motor voltage. Set this value to “0 V” if the rated motor voltage is identical to the input voltage.
BAS-10 60/50 Hz Sel	Set the rated motor frequency.
BAS19 AC Input Volt	Set the inverter input voltage.
DRV-06 Cmd Source	Set the source of the frequency reference. (Ex: KEYPAD, FX/RX-1, FX/RX-2, etc.)
DRV-01 Cmd Frequency	Set the frequency reference. (Ex: 50 Hz, 60 Hz, etc.)

Note

While you are in Easy Start mode, you can press the [ESC] key on the keypad to cancel Easy Start mode and enter Monitor mode.

4.18.3 Checking the Inverter Operation

Caution

Using an inverter, you can easily operate a motor at a high speed. Before operating a motor using an inverter, ensure that the set speed is within the motor's rated speed.

Follow the instructions to ensure that the motor operates correctly according to the inverter settings, and adjust the settings if required.

1. Set DRV-06 (CMD source) to “0 (KEYPAD).”
2. Set DRV-07 (Freq Ref Src) to “0 (Keypad-1).”
3. Set DRV-01 (CMD Frequency) to a temporary speed (Ex: 60 Hz).
4. Press the FWD key on the keypad, and ensure that the motor is rotating in the correct direction. When the forward command (Fx) is on, the motor should rotate counterclockwise when viewed from the load side of the motor. If the motor rotates in the reverse direction, switch the cables at the U and V terminals.

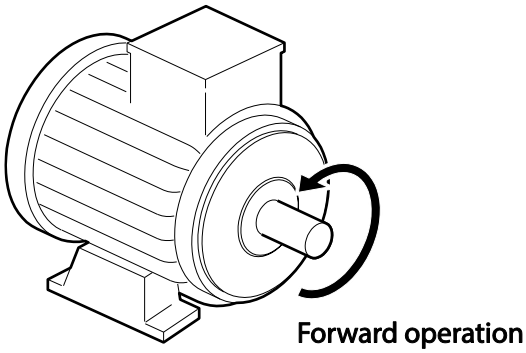

Caution

Ensure that the input power is within the inverter’s rated input voltage range during operation.

5 Using the Keypad

5.1 About the Keypad

A keypad is used to set inverter parameters, monitor the inverter's status, and operate the inverter.

5.1.1 Dimensions

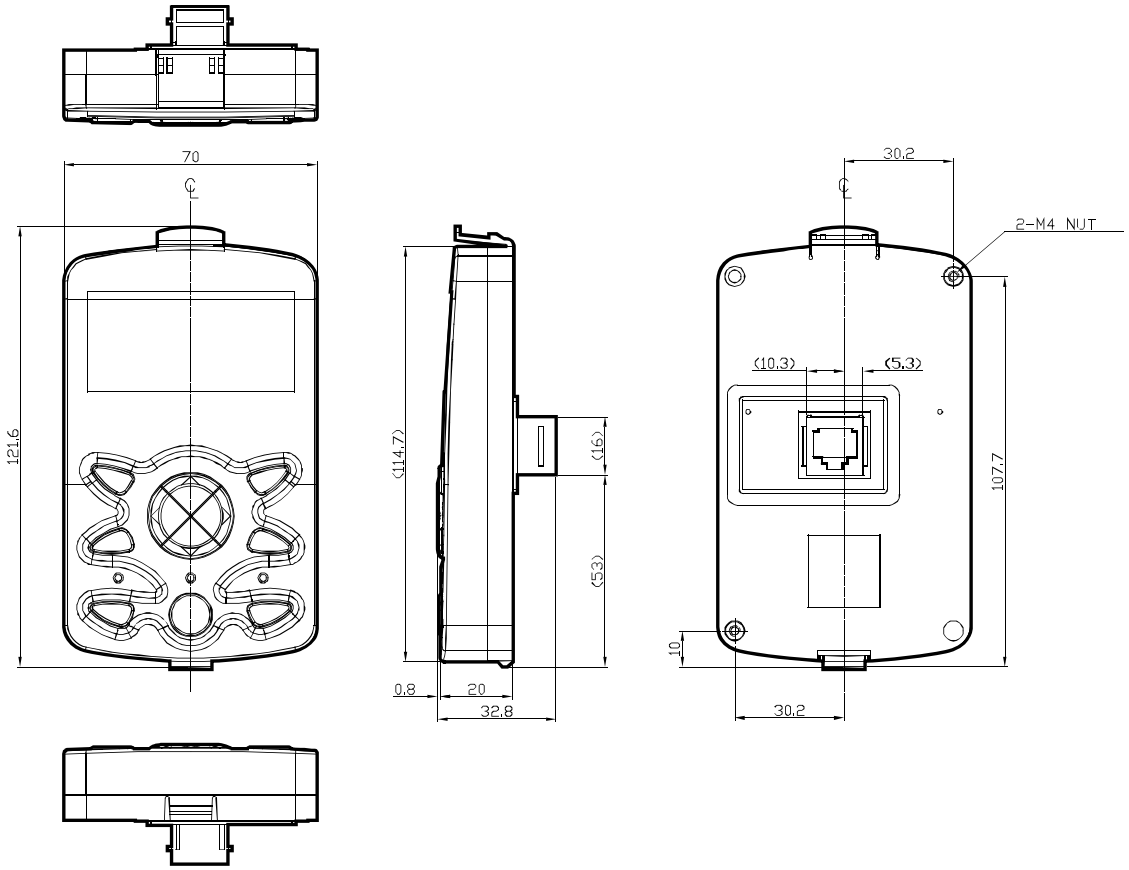

5.1.2 Key Functions

The following table lists the names and functions of the keypad's operation keys.

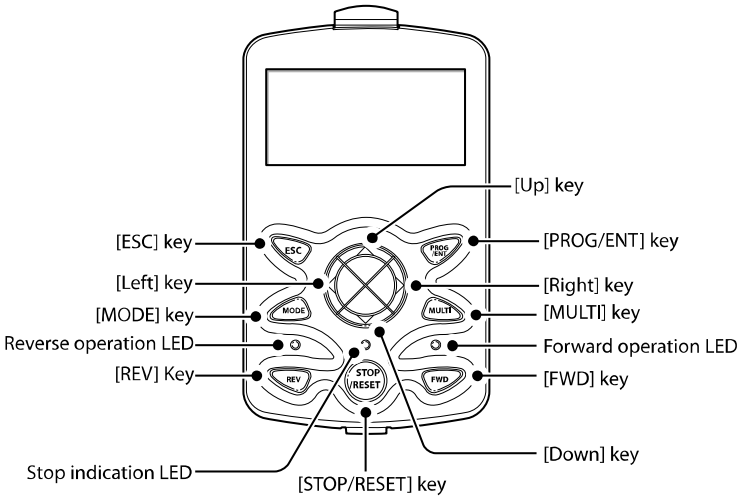

Section	Buttons	Key Name	Function Description
KEY	MODE	[MODE] key	Used to switch between modes.
	PROG /ENT	[PROG/ENT] key	If this button is pressed once, the parameter can be edited at the status of the editable parameter code. If this button is pressed after modification, it will save the modified data.
		[Up] key	Switch between codes, or increase or decrease parameter values.
		[Down] key	
		[Left] key	Switch between groups or move the cursor during parameter setup or modification.
		[Right] key	
	MULTI	[MULTI] key	Used to register jog or user codes.
	ESC	[ESC] key	If you press this key before pressing the [PROG / ENT] key, it will revert the parameter value to the previous value. If you press this key while editing the codes in any function group, the keypad will display the first code of the function group. If you press this key while moving through the modes, the keypad will display Monitor mode.
	FWD	[FWD] key	Used to operate the motor in the forward direction.
	REV	[REV] key	Used to operate the motor in the reverse direction.
	STOP /RESET	[STOP/RESET] key	Used to stop the operation and release a fault.

5.1.3 Display Items

Monitor Mode

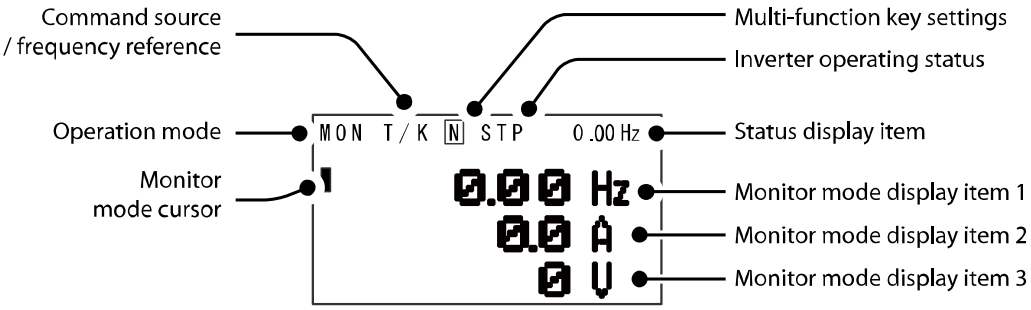

Parameter Mode

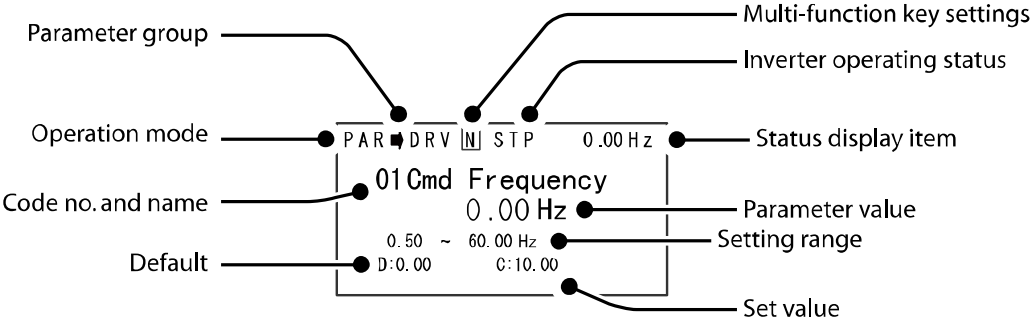

5.1.4 Display Item List

The following table lists the items in the display.

Item	Description
Mode display items	Displays the current mode's display items. For more details, refer to *5.3 Navigating Modes* on page *94*.
Parameter group items	Displays the current parameter group's items. For more details, refer to *5.4 Navigating Modes and Parameters* on page *97*.

Item	Description
Command source / frequency reference items	Displays the types of sequences and the number of steps during an auto sequence operation.
Status display items	Displays the output frequency, output voltage, and current. For more details, refer to *5.1.3 Display Items* on pages *88*.
Monitor mode display items	Displays the current operation status. For more details, refer to *5.1.3 Display Items* on pages *88*.

Monitor display items

The following table lists display icons and their names and functions.

No	Function	Display	Description
1	Operation mode	MON	Monitor mode
		PAR	Parameter mode
		U&M	User-defined and Macro mode
		TRP	Trip mode
		CNF	Configuration mode
2	Command source	K	Keypad operation command
		O	FieldBus communication option operation command
		A	Application option operation command
		R	Built-in 485 operation command
		T	Terminal block operation command
3	Frequency reference	K	Keypad frequency command
		V	V1 input frequency command
		I	I1 input frequency command
		P	Pulse input frequency command
		U	Frequency command during UP operation (Up-Down operation)
		D	Frequency command during DOWN operation (Up-Down operation)
		S	Frequency command during STOP operation (Up-Down operation)
		O	FBus Option frequency command
		X	V2 and I2 frequency commands for sub-terminal block
		J	Jog frequency command
		R	Internal 485 frequency command
		1-9 A-F	Multi-step frequency command
4	Multi-function key settings	JOG key	Used to switch to Keypad JOG mode
		Local/Remote	Used to select local or remote operation

No	Function	Display	Description
		User Group Select key	Used to register parameters as a user group in Parameter mode or delete parameters in the user group.
5	Inverter operating status	STP	Motor stopped
		FWD	Operating in the forward direction
		REV	Operating in the reverse direction
		DC	DC output
		WAN	Warning
		STL	Stalling
		SPS	Speed Search
		OSS	Software over current controlled
		OSH	Hardware over current controlled
		TUN	Auto tuning

*OSS / OSH may cause overcurrent when the load is too large or when the acceleration/deceleration time is short. The inverter monitors the output current so that an overcurrent trip does not occur and also performs overcurrent suppression.
At this time, the output frequency is automatically changed to reduce the output current or the inverter output is temporarily cut off to prevent overcurrent.

5.2 Menu Items

The SV-iS7 series inverter uses 5 modes to monitor or configure different functions. Each mode has its own function items suitable for the desired properties. The parameters in Parameter mode and User & Macro mode are divided into smaller groups of relevant functions.

Press the [MODE] key to navigate between groups.

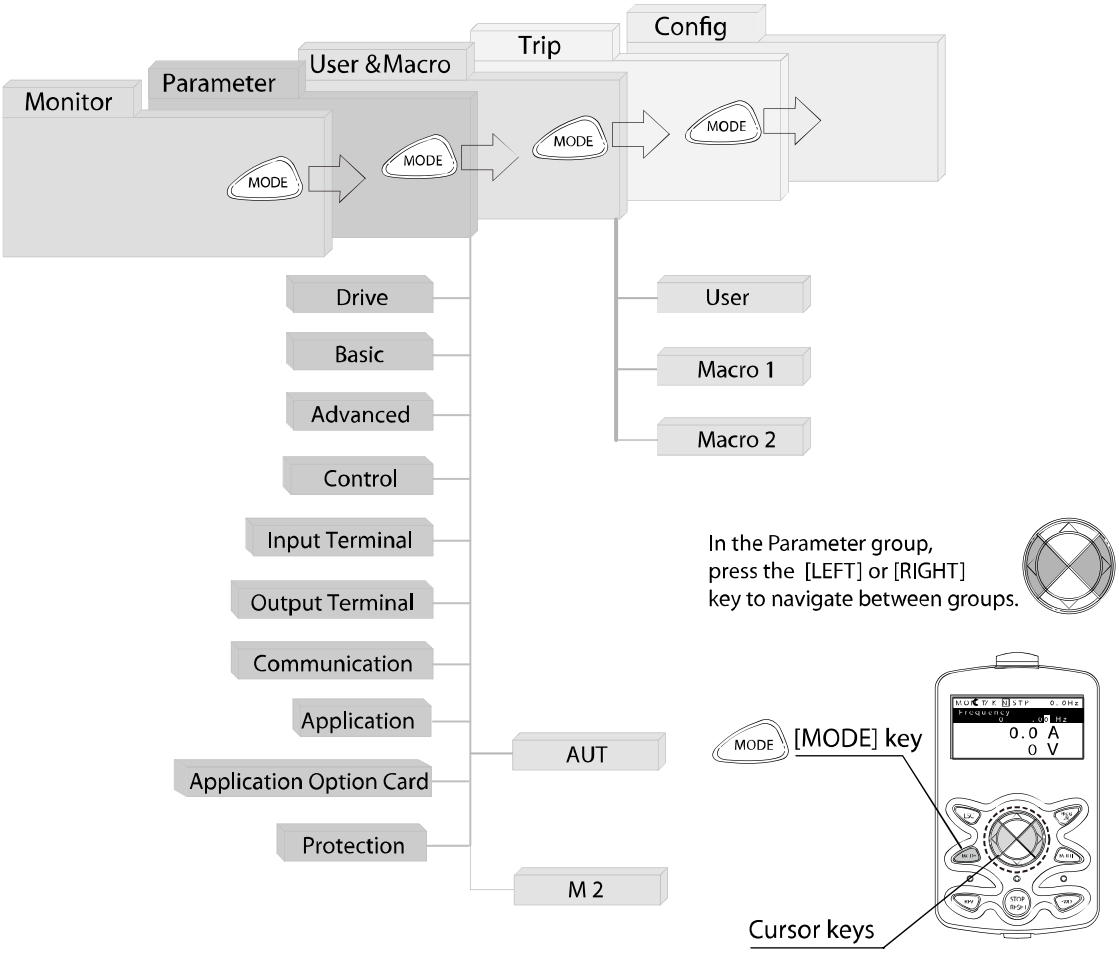

Mode	Display	Description
Monitor mode	MON	Displays the inverter's operation status information. You can monitor the frequency setting, operating frequency display, output current, voltage, etc.
Parameter mode	PAR	Used to configure the functions required to operate the inverter. These functions are divided into 12 groups based on purpose and complexity.
User & Macro mode	U&M	Used to define User and Macro groups. These user-definable groups allow specific functions of the inverter to be grouped and managed in separate groups. This mode will not be displayed when navigating through modes if no User groups or Macro groups have been defined.
Trip mode	TRP	Used to monitor the inverter's fault trip information, including the previous fault trip history. When a fault trip occurs during inverter operation, the operation frequency, output current, and output voltage of the inverter at the time of the fault can be monitored. This mode will not be displayed if the inverter is not at fault and a fault trip history does not exist.
Configuration mode	CNF	Used to configure the inverter features that are not directly related to the operation of the inverter. The settings you can configure in Configuration mode include keypad display language options, monitor mode environment settings, communication module display settings, and parameter duplication and initialization.

5.2.1 Parameter Mode

Mode	Display	Description
Drive group	DRV	Includes frequency/acceleration/deceleration time setting, operation command selection, etc.
Basic group	BAS	Configures basic operation parameters. These parameters include motor parameters and multi-step frequency parameters.
Advanced function group	ADV	Configures acceleration or deceleration, patterns, and frequency limits.
Control function group	CON	Configures functions related to sensorless and vector control.
Input terminal function group	IN	Configures input terminal–related features, including digital multi–functional inputs and analog inputs.
Output terminal function group	OUT	Configures the inverter output terminal block-related features, including the relay and analog outputs.
Communication function group	COM	Configures the communication features for the RS-485, if one is installed.
Application function group	APP	Configures the features related to PID control and auto sequence operation.
Auto Sequence run	AUT	Configures the necessary features for auto sequence operation.

Mode	Display	Description
group		This group will be displayed if the auto sequence operation in the APP group is selected.
Application option group	APO	Configures the encoder and PLC option module-related features if they are installed.
Protection group	PRT	Configures motor and inverter protection features.
Motor 2 function group (Motor 2)	M2	Configures the secondary motor-related features. This group will be displayed when Motor #2 is selected from the multi-function input terminal functions.

5.2.2 User & Macro Mode

Group	Display	Description
User group	USR	Used to group frequently accessed function parameters. User parameter groups can be configured using the multi-function key on the keypad.
Macro group	MCx	This provides different factory preset groups of functions based on the type of load. Group MC1, MC2, or MC3 will be displayed when the user selects the desired load type. Macro groups can be selected in CNF mode.

5.3 Navigating Modes

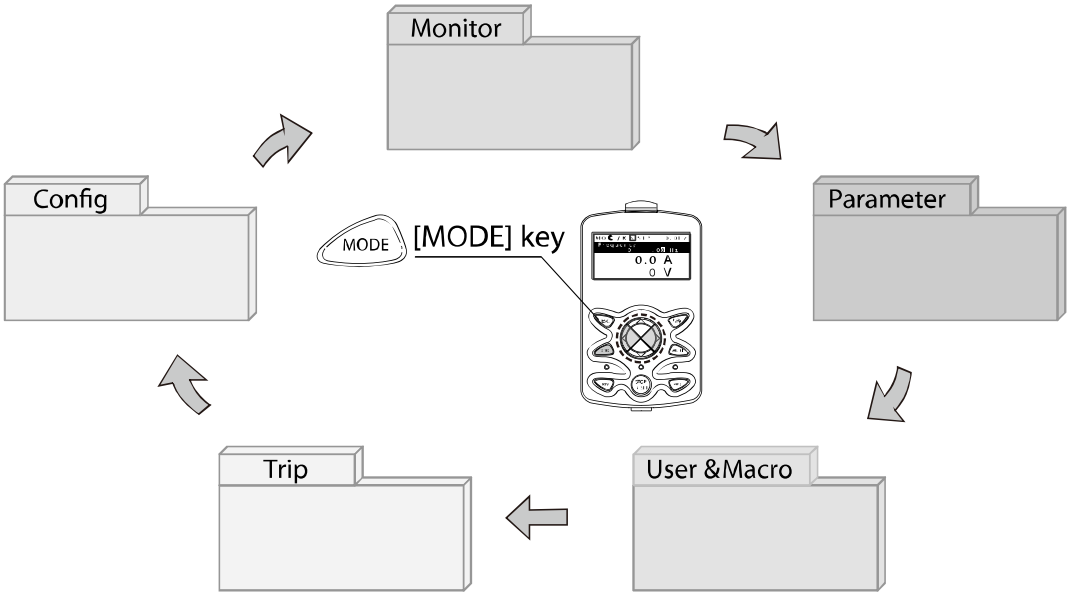

5.3.1 Mode Navigation at the Factory Default

You can change the display to navigate modes by using the [MODE] key. The User & Macro Mode and Trip Mode are not displayed when the inverter is set to the factory default settings.

MON T/K N STP 0.00Hz 0.00 Hz 0.0 A 0 V	• Displays when the inverter is powered on. This is the display of Monitor mode (MON). • Press the [MODE] key.
PAR ➡DRV N STP 0.00Hz 00 Jump Code 9 CODE 01 Cmd Frequency 0.00 Hz 02 Cmd Torque 0.0 %	• You are now in Parameter mode (PAR). • Press the [MODE] key.

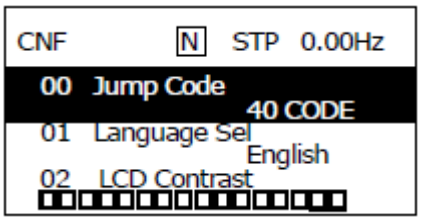	• You are now in Config mode (CNF). • Press the [MODE] key.
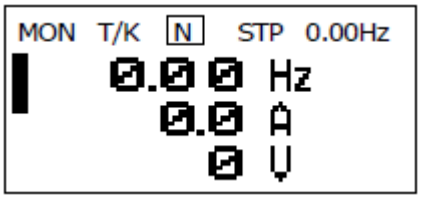	• You are now in Monitor mode again.

5.3.2 Mode Navigation with User/Macro Mode and Trip Mode

If you register a user code or set the macro function using the [MULTI] key, the User & Macro mode will be displayed, unlike the factory default settings during mode navigation. In addition, when a trip occurs during operation, Trip mode will be displayed. The trip information will also be saved in the trip mode history if you release the trip using the RESET function. The two modes for mode navigation are as follows.

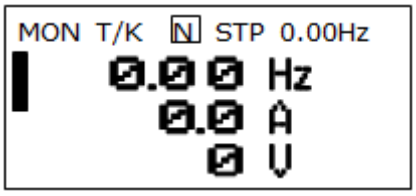	• Displays when the inverter is powered on. This is the display of Monitor mode (MON). • Press the [MODE] key.
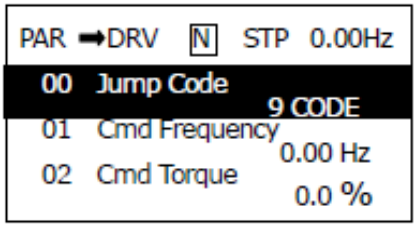	• You are now in Parameter mode (PAR). • Press the [MODE] key.

U&M ➡USR N STP 0.00Hz 00 Jump Code 9 CODE 01 Cmd Frequency 0.00 Hz 02 Cmd Torque 0.0 %	• You are now in User & Macro mode (U&M). • Press the [MODE] key.
TRP Last-1 00 Trip Name (1) External Trip 01 Output Freq 0.00 Hz 02 Output Current 0.0 A	• You are now in Trip mode (TRP). • Press the [MODE] key.
CNF N STP 0.00Hz 00 Jump Code 40 CODE 01 Language Sel English 03 LCD Contrast	• You are now in Config mode (CNF). • Press the [MODE] key.
MON T/K N STP 0.00Hz 0.00 Hz 0.0 A 0 V	• You are now in Monitor mode again.

5.4 Navigating Modes and Parameters

You can navigate modes by using the [Left] or [Right] keys after navigating to the Parameter Mode or User & Macro Mode via the [Mode] key.

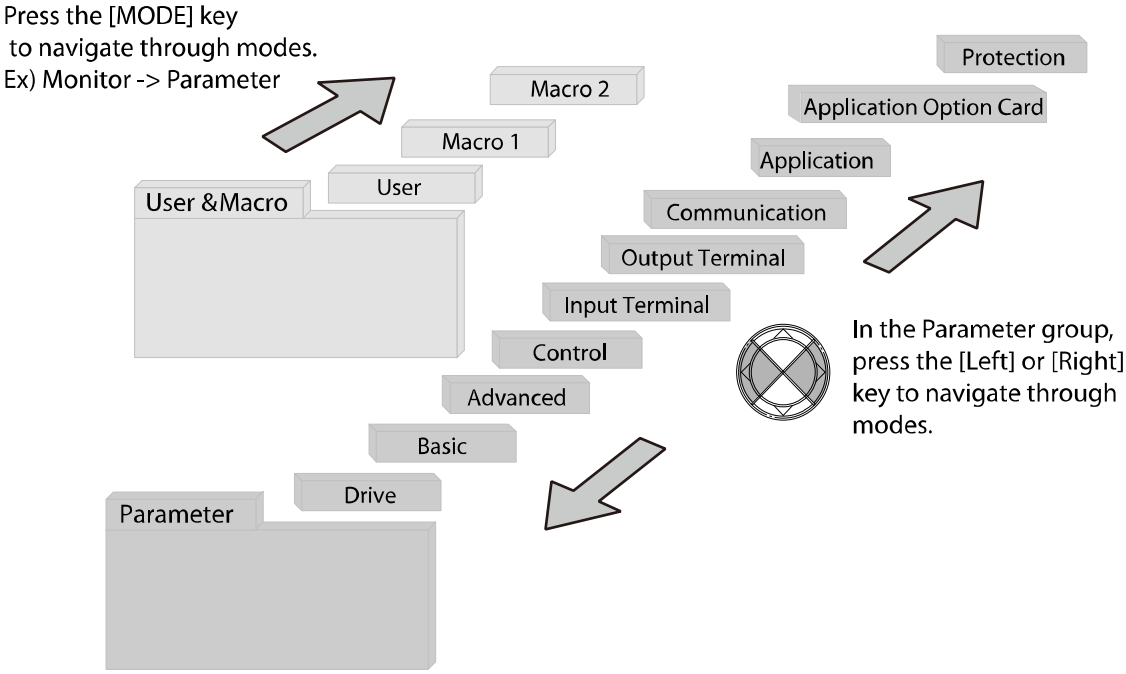

5.4.1 Group Navigation in Parameter mode

If you press the [Right] key in Parameter mode, the display will change as shown below. If you press the [Left] key, the display order will be reversed.

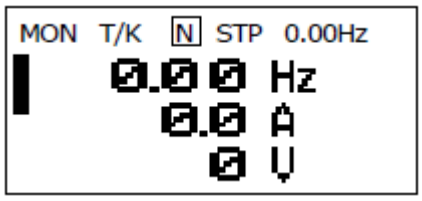	• Displays when the inverter is powered on. This is the display of Monitor mode (MON). • Press the [MODE] key.

PAR ➡DRV N STP 0.00Hz 00 Jump Code 9 CODE 01 Cmd Frequency 0.00 Hz 02 Cmd Torque 0.0 %	• You are now in Parameter mode (PAR). • The Drive Group (DRV) of Parameter mode is displayed. • Press the [Right] key.
PAR ➡BAS N STP 0.00Hz 00 Jump Code 20 CODE 01 Aux Ref Src None 02 Cmd 2nd Src Fx/Rx-1	• You are now in the Basic Function Group (BAS). • Press the [Right] key.
PAR ➡ADV N STP 0.00Hz 00 Jump Code 24 CODE 01 Acc Pattern Linear 02 Dec Pattern Linear	• You are now in the Advanced Function Group (ADV). • Press the [Right] key 7 times.
PAR ➡PRT N STP 0.00Hz 00 Jump Code 40 CODE 01 Load Duty Heavy Duty 02 Phase Loss Chk	• The group sequence will change and the Protection Function Group (PRT) will be displayed. • Press the [Right] key.
PAR ➡DRV N STP 0.00Hz 00 Jump Code 9 CODE 01 Cmd Frequency 0.00 Hz 02 Cmd Torque 0.0 %	• You are now in the Drive group (DRV) of the Parameter group again.

5.4.2 Group Shift in User & Macro Mode

To navigate to User & Macro Mode, the user code should be registered or the macro function should be selected. If the user code is registered and the macro function is selected, you can navigate to the group as shown below.

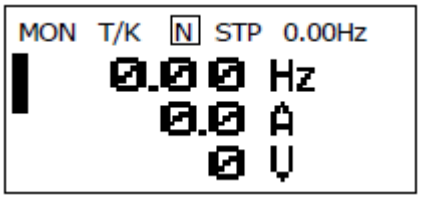	• Displays when the inverter is powered on. This is the display of Monitor mode (MON). • Press the [MODE] key twice.
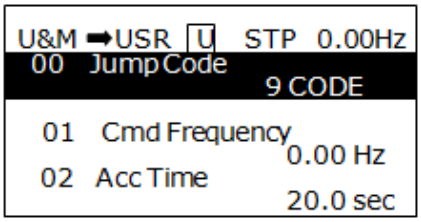	• You are now in the User & Macro mode (U&M). • The User Group (USR) is displayed. • Press the [Right] key.
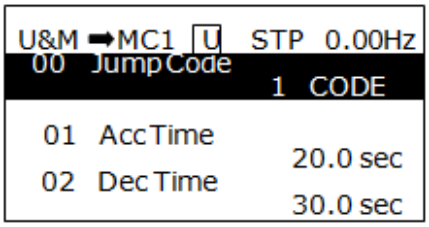	• You are now in the Macro group (MC1). • Press the [Right] key.
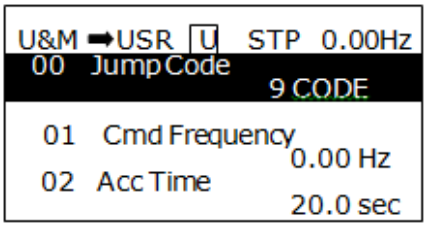	• You are now in the User Group (USR) again.

5.5 Navigating through Codes (Function Items)

5.5.1 Code Navigation in Monitor Mode

To display the frequency, output current, and output voltage, press the [Up] or [Down] keys to scroll through the items.

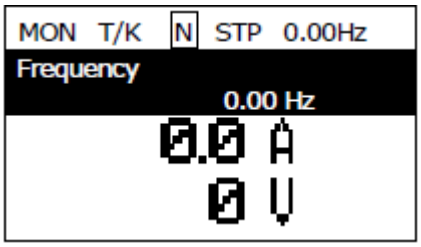	• Displays when the inverter is powered on. This display is in Monitor mode. • The cursor is located at the frequency item. • Press the [Down] key.
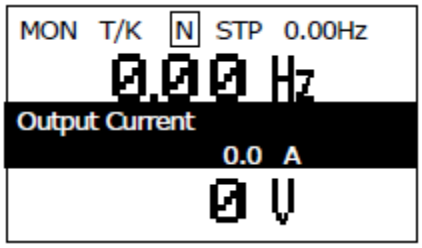	• The second display item displays the output current. • Do not press any key for approximately 2 seconds after navigation.
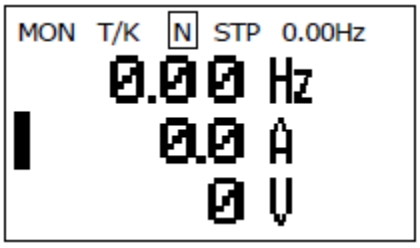	• The output current text has disappeared and the cursor has moved to the second display item. • Press the [Down] key.
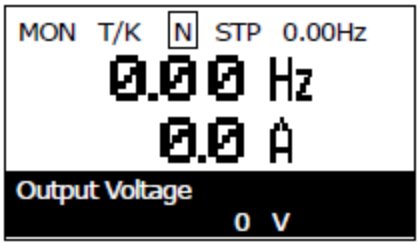	• The third display item displays the output voltage. • Do not press any key for approximately 2 seconds after navigation.

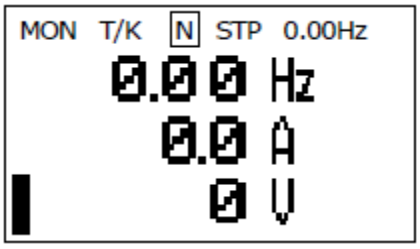	• The output voltage text has disappeared and the cursor has moved to the third display item. • Press the [Up] key twice.
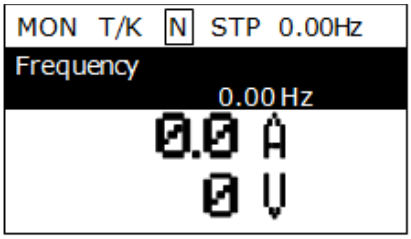	• The first item displays the frequency.
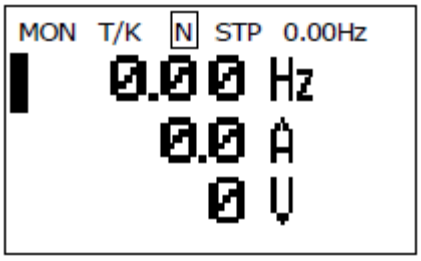	• The frequency text has disappeared and the cursor has moved to the first display item.

5.5.2 Code Navigation (function items) in Other Modes and Groups

Using the [Up] and [Down] keys: The following example demonstrates how to navigate through the codes in the Drive (DRV) group and the Basic [BAS] group of Parameter mode. Code navigation in other modes is the same as follows.

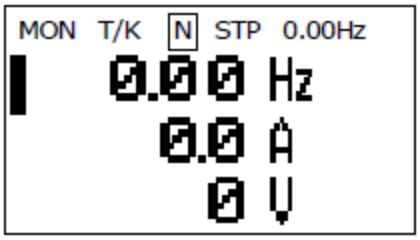	• Displays when the inverter is powered on. This display is in Monitor mode. • Press the [Down] key.

PAR ➡DRV N STP 0.00Hz 00 Jump Code 1 CODE 01 Cmd Frequency 0.00 Hz 02 Acc Time 20.0 sec	• Displays the Drive (DRV) group of Parameter mode. If the DRV group is not displayed, press the [MODE] key until the DRV group appears, or press the [ESC] key.
PAR ➡DRV N STP 0.00Hz 00 Jump Code 9 CODE 01 Cmd Frequency 0.00 Hz 02 Acc Time 20.0 sec	• If you press the [Down] key, you will navigate to code No. 01 in the DRV group of Parameter mode. • Press the [Right] key.
PAR ➡BAS N STP 0.00Hz 00 Jump Code 20 CODE 01 Aux Ref Src None 04 Cmd 2nd Src Fx/Rx-1	• You have moved to the Basic (BAS) group of Parameter mode. • You can navigate through the codes using the [Up] or [Down] keys.

5.5.3 Code Navigation Using Jump Code

In the Parameter mode and User/Macro mode groups, you can use the Jump Code Entry item to move to a desired code. It is quicker to move to a large code number using the Jump Code Entry item rather than the [Up] and [Down] keys. The following example demonstrates how to move to code No. 09 of the Drive (DRV) group.

PAR ➡DRV N STP 0.00Hz 00 Jump Code 9 CODE 01 Cmd Frequency 0.00 Hz 02 Acc Time 20.0 sec	• Ensure that code No. 00 is displayed in the initial display of the Drive (DRV) group of Parameter mode. • Press the [PROG/ENT] key.

PAR ➡DRV N STP 0.00Hz 00 Jump Code 9 CODE 01 Cmd Frequency 0.00 Hz 02 Acc Time 20.0 sec	• The cursor flashes and you can enter the code number.
PAR ➡DRV N STP 0.00Hz 00 Jump Code 9 CODE 1~99 CODE D:9 C:9	• Press the [Up] key to enter 9 and then press the [PROG/ENT] key.
PAR ➡DRV N STP 0.00Hz 09 Control Mode V/F 10 Torque Control ----- No ----- 11 JOG Frequency 10.00 Hz	• You have moved to code No. 09 of the DRV group.
PAR ➡DRV N STP 0.00Hz 00 Jump Code 9 CODE 01 Cmd Frequency 0.00 Hz 02 Acc Time 20.0 sec	• Press the [ESC] key to move to code No. 00 of the DRV group.

5.6 Setting Parameters

5.6.1 Parameter Settings in Monitor Mode

You can set some parameters, such as the frequency, in Monitor mode. The following example demonstrates how to set the frequency.

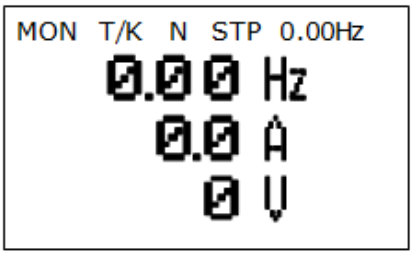	• Ensure that the cursor is at the frequency item. Also, ensure that the frequency can be set to 09 in the Drive (DRV) group using the keypad. • Press the [PROG/ENT] key.
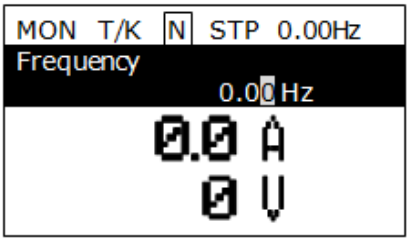	• Detailed information of the item is displayed and the cursor flashes. • Press the [Left] or [Right] keys to move the cursor to the desired location to set the frequency.
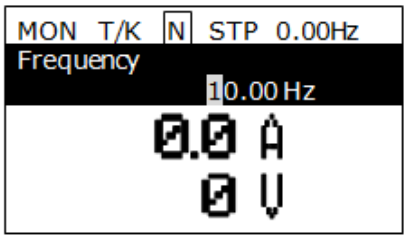	• Press the [Up] key to set the frequency to 10 Hz. • Press the [PROG/ENT] key.
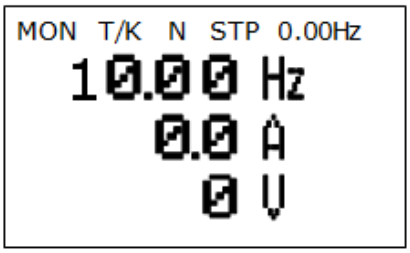	• The frequency reference is set to 10 Hz.

5.6.2 Parameter Settings in Other Modes and Groups

The following example demonstrates how to change the frequency of the Drive (DRV) group in Parameter mode. The frequency in the other modes or groups can be set as follows.

PAR ➡DRV [N] STP 0.00Hz 00 Jump Code 9 CODE 01 Cmd Frequency 0.00 Hz 02 Cmd Torque 0.0 %	• This is the initial display in Parameter mode. • Press the [Down] key.
PAR ➡DRV [N] STP 0.00Hz 00 Jump Code 9 CODE 01 Cmd Frequency 0.00 Hz 02 Cmd Torque 0.0 %	• You have moved to the 01 frequency setting code. • Press the [PROG/ENT] key.
PAR ➡DRV [N] STP 0.00Hz 01 Cmd Frequency 0.00 Hz 0.50 ~ 60.00 Hz D:0.00 C:0.00	• The cursor flashes and you can enter the desired frequency. • If the frequency reference is set to 10 Hz, press the [Left] or [Right] keys to move the cursor to the desired place.
PAR ➡DRV [N] STP 0.00Hz 01 Cmd Frequency 10.00 Hz 0.50 ~ 60.00 Hz D:0.00 C:0.00	• Press the [Up] key to enter 10 Hz and then press the [PROG/ENT] key.
PAR ➡DRV [N] STP 0.00Hz 00 Jump Code 9 CODE 01 Cmd Frequency 10.00 Hz 02 Cmd Torque 0.0 %	• The frequency reference is set to 10 Hz.

5.7 Monitoring Operating Status

5.7.1 Using Monitor Mode

Three items can be displayed in Monitor mode at a time. Also, some items, such as the frequency item, can be edited. You can select the displayed items in Configuration (CNF) mode.

MON T/K N STP 0.00Hz 10.00 Hz 0.0 A 0 V	• This is the initial display in Monitor mode. • The frequency, current, and voltage are set as the default monitor items. • The frequency reference is displayed when the inverter operation has stopped, and the operating frequency is displayed when the inverter is operating.
CNF N STP 0.00Hz 21 Monitor Line-1 Frequency 22 Monitor Line-2 Output Current 23 Monitor Line-3 Output Voltage	• You can set the items to display in Monitor mode in sequence from 21 to 23 in Configuration (CNF) mode. • Press the [Down] key to move to code No. 23
CNF N STP 0.00Hz 21 Monitor Line-1 Frequency 22 Monitor Line-2 Output Current 23 Monitor Line-3 Output Power	• Change the code No. 23 item in Monitor mode to the output power.
MON T/K N STP 0.00Hz 0.00 Hz 0.0 A 0.00 kW	• Ensure that the third displayed item in Monitor mode is changed to the output power.

5.7.2 Monitoring Items

Mode	Code	Function Display	Setting Range		Initial Value
CNF	20	Anytime Para	0	Frequency	0: Frequency
	21	Monitor Line-1	1	Speed	0: Frequency
	22	Monitor Line-2	2	Output Current	2:Output Current
	23	Monitor Line-3	3	Output Voltage	3:Output Voltage
			4	Output Power	
			5	WHour Counter	
			6	DCLink Voltage	
			7	DI Status	
			8	DO Status	
			9	V1 Monitor [V]	
			10	V1 Monitor [%]	
			11	I1 Monitor [mA]	
			12	I1 Monitor [%]	
			13	V2 Monitor [V]	
			14	V2 Monitor [%]	
			15	I2 Monitor [mA]	
			16	I2 Monitor [%]	
			17	PID Output	
			18	PID Ref Value	
			19	PID Fdb Value	
			20	Torque	
			21	Torque Limit	
			22	Trq Bias Ref	
			23	Speed Limit	
			24	Load Speed	
			25	Temperature	

5.7.3 Using the Status Display

The items displayed on the right-top of the display are shown in other modes, including Monitor mode. If you register a desired variable in the display, you can monitor it at any time regardless of the mode navigation or change.

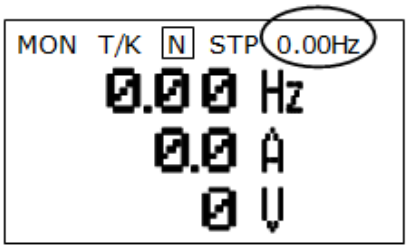	• This is the initial display of Monitor mode. • When the inverter settings are set to the factory default, the status item displays the frequency.
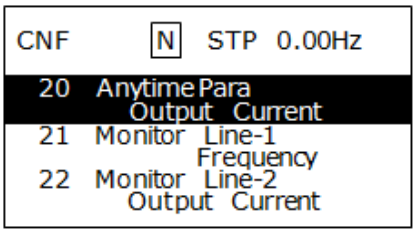	• Select the item to display in the status display in code 20 of Configuration (CNF) mode. • Press the [PROG/ENT] key to change the item to the output current. • The unit at the top of the display is changed from hertz (frequency) to amps (current).
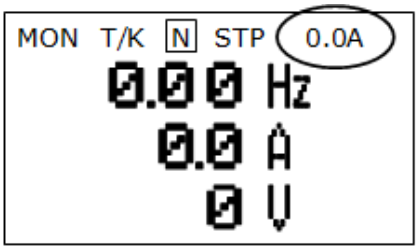	• Ensure that the unit in the status display is changed to amps (current) in Monitor mode.

5.8 Monitoring Faults

5.8.1 Faults during Inverter Operation

TRP current Over Voltage (01) 01 Output Freq 48.30 Hz 02 Output Current 33.3 A	• If a fault trip occurs during inverter operation, the inverter enters Trip mode automatically and displays the type of fault trip that has occurred.
TRP Last-1 01 Output Freq 48.30 Hz 02 Output Current 33.3 A 03 Inverter State Stop	• Press the [Down] key to view the information on the inverter at the time of the fault, including the output frequency, current, and operating status.
MON T/K N STP 0.0A 0.00 Hz 0.0 A 0 V	• When the inverter is reset and the fault trip is released, the keypad display returns to the screen that was displayed before the fault trip occurred.

5.8.2 Multiple Faults at a Time during Inverter Operation

TRP current Over Voltage (02) 01 Output Freq 48.30 Hz 02 Output Current 33.3 A	• If multiple fault trips occur at the same time, the number of fault trips that occurred is displayed next to the fault trip type. • Press the [PROG/ENT] key.
TRP current 00 Trip Name (2) 0 Over Voltage 1 Extema Trip	• The types of all the fault trips are displayed. • Press the [PROG/ENT] key.
TRP current Over Voltage (02) 01 Output Freq 48.30 Hz 02 Output Current 33.3 A	• The display mode that was shown before you checked the fault information is displayed.

5.8.3 Saving and Monitoring the Fault Trip History

Previous fault trips can be saved in Trip mode. You can save up to 5 previous fault trips. Fault trips caused by resetting the inverter, as well as low voltage faults caused by the inverter being switched off, are also saved.

If there are more than 5 fault trips, the oldest 5 fault trips are automatically deleted.

TRP current Over Voltage (02) 01 Output Freq 48.30 Hz 02 Output Current 33.3 A	• If a fault trip occurs during inverter operation, the inverter enters Trip mode and displays the type of fault trip that has occurred.
MON T/K N STP 0.0A 0.00 Hz 0.0 A 0 V	• If you press the [STOP/RESET] key or an input is entered on the terminal, the fault trip is automatically saved and the display status that was displayed before the fault trip occurred is displayed. • Press the [MODE] key to move to Trip mode.
TRP current 00 Trip Name (2) Over Voltage 01 Output Freq 48.30 Hz 02 Output Current 33.3 A	• The most recent fault trip is saved in the Last-1 code. • Press the [Right] key.
TRP current 00 Trip Name (1) External Trip 01 Output Freq 48.30 Hz 02 Output Current 33.3 A	• The previous fault trips are saved in the Last-2 code. • If another fault trip occurs, the previous fault trips saved in the Last-2 code move to the Last-3 code.

5.9 Initializing Parameters

You can initialize the changed parameters. In addition to initializing the entire parameter, you can also select the individual parameter mode to be initialized.

MON T/K N STP 0.0A 0.00 Hz 0.0 A 0 V	• Monitor mode is displayed.
CNF N STP 0.0A 00 Jump Code 9 CODE 01 language Sel English 02 Inv S/W Ver Version 1.00	• Press the [MODE] key to move to Configuration (CNF) mode.
CNF N STP 0.0A 31 Option-2 Type None 32 Option-3 Type None 40 Parameter Init ----- No ------	• Press the [Down] key to move to code No. 40. • Press the [PROG/ENT] key.
CNF N STP 0.0A 40 Parameter Init 0 ------ No ------ 1 All Groups 2 DRV	• Of the parameter items to initialize, select All Groups and then press the [PROG/ENT] key.

CNF N STP 0.0A 31 Option-2 Type None 32 Option-3 Type None 40 Parameter Init ----- No ------	• The Parameter Initialization option is displayed again when the initialization is complete.

6 Basic Functions

6.1 Setting Frequency References

The iS7 inverter provides several methods to set up and modify a frequency reference for an operation. The keypad, analog inputs [for example voltage (V1) and current (I1) signals], or RS-485 (digital signals from higher-level controllers, such as PCs or PLCs) can be used.

Group	Code	Name	LCD Display	Parameter Setting		Setting Range	Unit
DRV	07	Frequency reference source	Freq Ref Src	0	KeyPad-1	0–9	-
				1	KeyPad-2		
				2	V1		
				3	I1		
				4	V2		
				5	I2		
				6	Int 485		
				7	Encoder		
				8	Field Bus		
				9	Pulse		

6.1.1 Keypad as the Source (KeyPad-1 setting)

You can modify the frequency reference using the keypad and apply changes by pressing the [ENT/PROG] key. To use the keypad as a frequency reference input source, go to DRV-07 (Frequency reference source) and change the parameter value to “0 (Keypad-1)”. Input the frequency reference for an operation at DRV-01 (Frequency reference).

Group	Code	Name	LCD Display	Parameter Setting		Setting Range	Unit
DRV	01	Frequency reference	Cmd Frequency	0.00		0.00–max. frequency*	Hz
	07	Frequency reference source	Freq Ref Src	0	KeyPad-1	0–9	-

* You cannot set a frequency reference that exceeds the max. frequency, as configured with DRV-20.

6.1.2 Keypad as the Source (KeyPad-2 setting)

You can use the [UP] and [DOWN] cursor keys to modify a frequency reference. To use this as a second option, set the keypad as the source of the frequency reference by going to DRV-07 (Frequency reference source) and changing the parameter value to “1 (Keypad-2)”. This allows frequency reference values to be increased or decreased by pressing the [UP] and [DOWN] cursor keys.

Group	Code	Name	LCD Display	Parameter Setting		Setting Range	Unit
DRV	01	Frequency reference	Cmd Frequency	0.00		0.00–max. frequency *	Hz
	07	Frequency reference source	Freq Ref Src	1	KeyPad-2	0–9	-

* You cannot set a frequency reference that exceeds the max. frequency, as configured with DRV-20.

6.1.3 V1 Terminal as the Source

You can set and modify a frequency reference by setting voltage inputs when using the V1 terminal. Use voltage inputs ranging from 0–10 V (unipolar) for forward-only operations. Use voltage inputs ranging from -10 to +10 V (bipolar) for both directions, with negative voltage inputs used for reverse operations.

6.1.3.1 Setting a Frequency Reference for 0–10 V Input

Set IN-06 (V1 Polarity) to “0 (unipolar)”. Use a voltage output from an external source or use the voltage output from the VR terminal to provide inputs to V1. Refer to the diagrams below for the wiring required for each application.

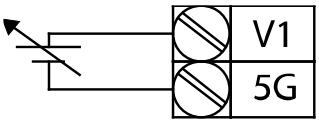

[External source application]

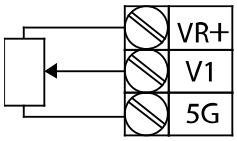

[Internal source (VR) application]

Group	Code	Name	LCD Display	Parameter Setting		Setting Range	Unit
DRV	07	Frequency reference source	Freq Ref Src	2	V1	0–9	-
IN	01	Frequency at maximum analog input	Freq at 100%	Maximum frequency		0.00– max. frequency	Hz
	05	V1 input monitor	V1 Monitor[V]	0.00		0.00–10.00	V
	06	V1 polarity options	V1 Polarity	0	Unipolar	0–1	-
	07	V1 input filter time constant	V1 Filter	10		0–10000	ms
	08	V1 minimum input voltage	V1 volt x1	0.00		0.00–10.00	V
	09	V1 output at minimum voltage (%)	V1 Perc y1	0.00		0.00–100.00	%
	10	V1 maximum input voltage	V1 Volt x2	10.00		0 .00– 10.00	V
	11	V1 output at maximum voltage (%)	V1 Perc y2	100.00		0–100	%
	16	Rotation direction options	V1 Inverting	0	No	0–1	-
	17	V1 quantizing level	V1 Quantizing	0.04		0.00*, 0.04–10.00	%

* Quantizing is disabled if “0” is selected.

0–10 V Input Voltage Setting Details

Code	Description
IN-01 Freq at 100%	Configures the frequency reference at the maximum input voltage when a potentiometer is connected to the control terminal block. A frequency set with code IN-01 becomes the maximum frequency only if the value set in code IN-11 (or IN-15) is 100%. • Set code IN-01 to 40.00 and use default values for codes IN-02–IN-16. The motor will run at 40.00 Hz when a 10 V input is provided at V1. • Set code IN-11 to 50.00 and use default values for codes IN-01–IN-16. The motor will run at 30.00 Hz (50% of the default maximum frequency–60 Hz) when a 10 V input is provided at V1.
IN-05 V1 Monitor[V]	Configures the inverter to monitor the input voltage at V1.
IN-07 V1 Filter	The V1 filter may be used when there are large variations between reference frequencies. Variations can be mitigated by increasing the time constant, but this requires an increased response time. The value t (time) indicates the time required for the frequency to reach 63% of the reference, when external input voltages are provided in multiple steps. 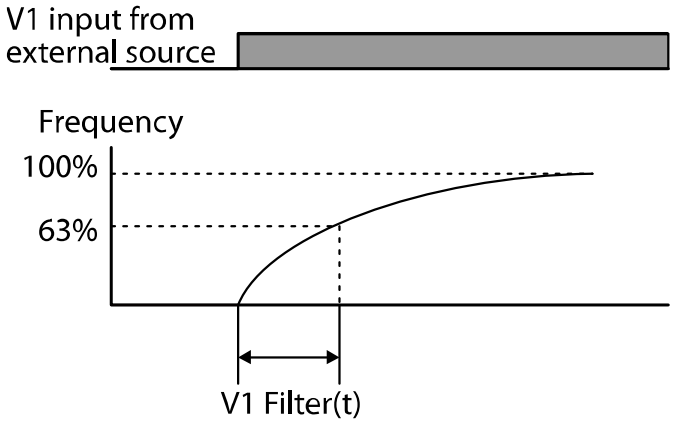 [V1 Filter]
IN-08 V1 volt x1– IN-11 V1 Perc y2	These parameters are used to configure the gradient level and offset values of the output frequency, based on the input voltage.

Code	Description
	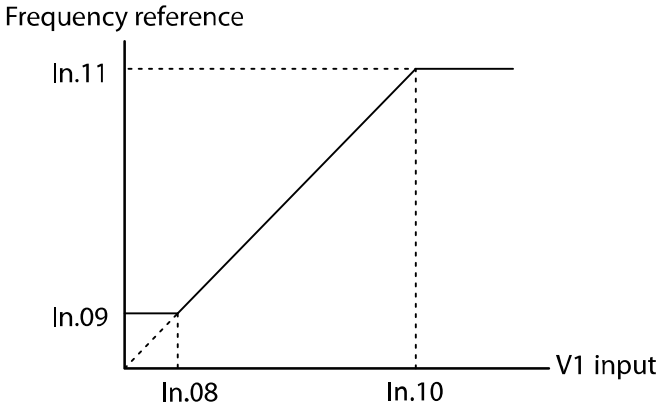
IN-16 V1 Inverting	Inverts the direction of rotation. Set this code to “1 (Yes)” if you need the motor to run in the opposite direction from the current rotation.
IN-17 V1 Quantizing	Quantizing may be used when the noise level is high in the analog input (V1 terminal) signal. Quantizing is useful when you are operating a noise-sensitive system, because it suppresses any signal noise. However, quantizing will diminish system sensitivity (resultant power of the output frequency will decrease based on the analog input). You can also turn on the low-pass filter using code IN-07 to reduce the noise, but increasing the value will reduce responsiveness and may cause pulsations (ripples) in the output frequency. Parameter values for quantizing refer to a percentage based on the maximum input. Therefore, if the value is set to 1% of the maximum analog input (60 Hz), the output frequency will increase or decrease by 0.6 Hz for every 0.1 V change in voltage. When the analog input is increased, an increase in the input equal to 75% of the set value will change the output frequency, and then the frequency will increase according to the set value. Likewise, when the analog input decreases, a decrease in the input equal to 75% of the set value will make an initial change to the output frequency. As a result, the output frequency will be different at acceleration and deceleration, mitigating the effect of analog input changes over the output frequency (ripples).

Code	Description
	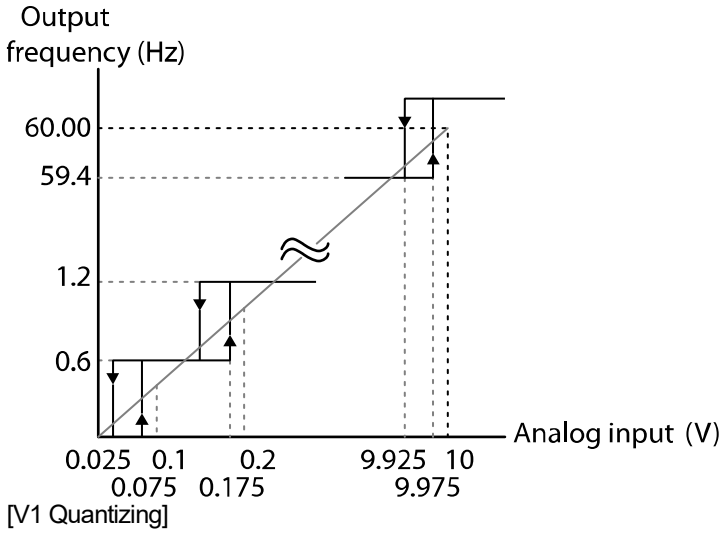

6.1.3.2 Setting a Frequency Reference for -10–+10 V Input

Set DRV-07 (Frequency reference source) to “2 (V1)”, and then set IN-06 (V1 Polarity) to “1 (bipolar)”. Use the output voltage from an external source to provide an input to V1.

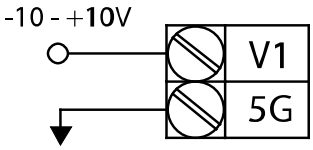

[External source application]

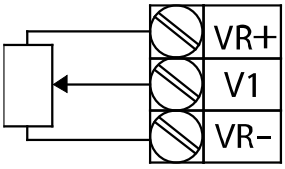

[Internal source (VR) application]

[V1 terminal wiring]

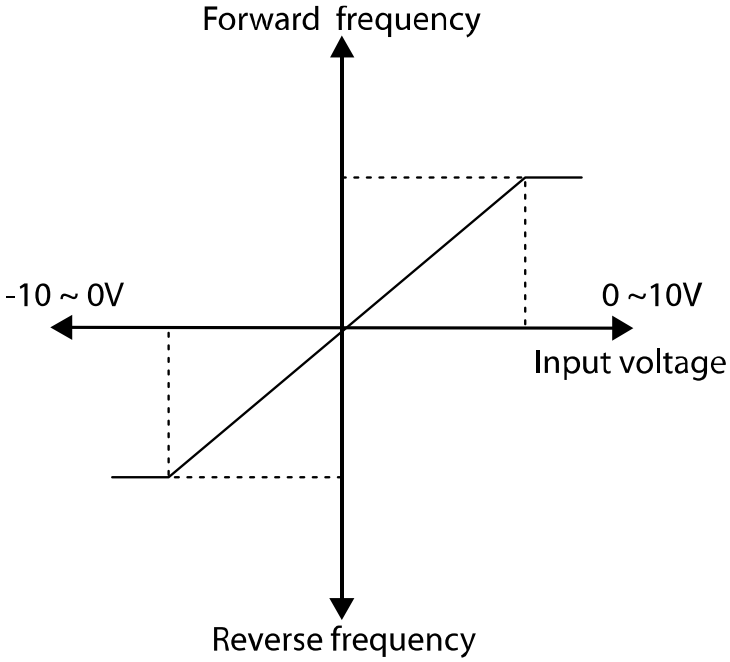

[Bipolar input voltage and output frequency]

Group	Code	Name	LCD Display	Parameter Setting		Setting Range	Unit
DRV	07	Frequency reference source	Freq Ref Src	2	V1	0–9	-
IN	01	Frequency at maximum analog input	Freq at 100%	60.00		0–max. frequency	Hz
	05	V1 input monitor	V1 Monitor	0.00		0.00–10.00 V	V
	06	V1 polarity options	V1 Polarity	1	Bipolar	0–1	-
	12	V1 minimum input	V1- volt x1	0.00		0.00–10.00 V	V

Group	Code	Name	LCD Display	Parameter Setting	Setting Range	Unit
		voltage				
	13	V1 output at minimum voltage (%)	V1- Perc y1	0.00	-100.00–0.00%	%
	14	V1 maximum input voltage	V1- Volt x2	-10.00	-10.00–0.00 V	V
	15	V1 output at maximum voltage (%)	V1- Perc y2	-100.00	-100.00–0.00%	%

Rotational Directions for Different Voltage Inputs

Command / Voltage Input	Input voltage	
	0–10 V	-10–0 V
FWD	Forward	Reverse
REV	Reverse	Forward

10–10 V Voltage Input Setting Details

Code	Description
IN-12 V1- volt x1– IN-15 V1- Perc y2	Sets the gradient level and offset value of the output frequency in relation to the input voltage. These codes are displayed only when IN-06 is set to “1 (bipolar)”. As an example, if the minimum input voltage (at V1) is set to “-2 (V)” with 10% output ratio, and the maximum voltage is set to “-8 (V)” with an 80% output ratio, the output frequency will vary within the range of 6–48 Hz. 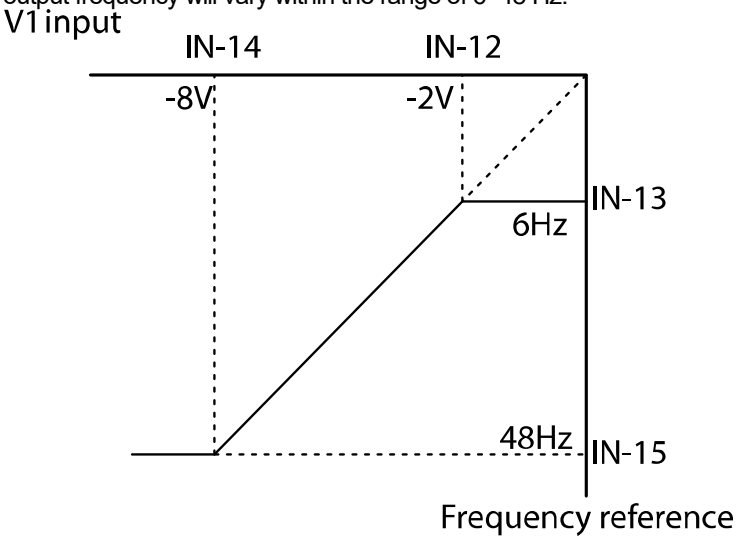 For details about the 0–+10 V analog inputs, refer to the code descriptions IN-08 V1 volt x1–IN-11 V1 Perc y2 on page *117*.

6.1.3.3 Setting a Reference Frequency using Input Current (I1)

You can set and modify a frequency reference using input current at the I1 terminal. Set DRV-07 (Frequency reference source) to “3 (I1)” and apply an input current of 0–20 mA to I1.

Group	Code	Name	LCD Display	Parameter Setting		Setting Range	Unit
DRV	07	Frequency reference source	Freq Ref Src	3	I1	0–9	-
IN	01	Frequency at maximum analog input	Freq at 100%	60.00		0–max. frequency	Hz
	20	I1 input monitor	I1 Monitor	0.00		0.00–20.00	mA
	22	I1 input filter time constant	I1 Filter	10		0–10000	ms
	23	I1 minimum input current	I1 Curr x1	4.00		0.00–20.00	mA
	24	I1 output at minimum current (%)	I1 Perc y1	0.00		0–100	%
	25	I1 maximum input current	I1 Curr x2	20.00		4.00–20.00	mA
	26	I1 output at maximum current (%)	I1 Perc y2	100.00		0.00–100.00	%
	31	I1 rotation direction options	I1 Inverting	0	No	0–1	-
	32	I1 quantizing level	I1 Quantizing	0.04		0.00*, 0.04–10.00	%

* Quantizing is disabled if “0” is selected.

Input Current (I1) Setting Details

Code	Description
IN-01 Freq at 100%	Configures the frequency reference for operation at the maximum current (when IN-26 is set to 100%). • If IN-01 is set to 40.00, and default settings are used for IN-23–26, an input current of 20 mA (max) to I1 will produce a frequency reference of 40.00 Hz. • If IN-26 is set to 50.00, and default settings are used for IN-01 (60 Hz) and IN-23–26, an input current of 20 mA (max) to I1 will produce a frequency reference of 30.00 Hz (50% of 60 Hz).
IN-20 I1 Monitor	Used to monitor the input current at I1.
IN-22 I1 Filter	Configures the time for the operation frequency to reach 63% of the target frequency based on the input current at I1.
IN-23 I1 Curr x1– IN-26 I1 Perc y2	Configures the gradient level and offset value of the output frequency. 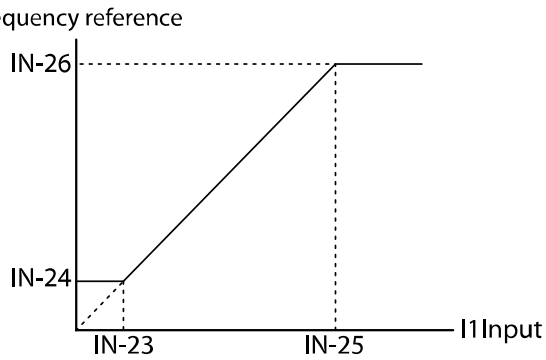 [Gradient and offset configuration based on output frequency]
IN-32 I1 Quantizing	Same as V1 Quantizing. For more details, refer to *6.1.3.1 Setting a Frequency Reference for 0–10 V Input* on page *116*.

6.1.4 Setting a Frequency Reference Using an I/O Expansion Module (Terminal V2/I2)

After installing an optional I/O I/O expansion moduleto the iS7 inverter, you can set and modify a frequency reference using the input voltage or current at the V2/I2 terminal.

6.1.4.1 Setting a Reference Frequency using Input Voltage at V2 Terminal

Set the DRV-07 (Frequency reference source) to “4 (V2)” and apply an input voltage of -10–+12 V to the V2 terminal.

Group	Code	Name	LCD Display	Parameter Setting		Setting Range	Unit
DRV	07	Frequency reference source	Freq Ref Src	4	V2	0–9	-
IN	35	V2 input display	V2 Monitor	0.00		-10.00–+10.00	V
	37	V2 input filter time constant	V2 Filter	10		0–10000	ms
	38	Minimum V2 input voltage	V2 Volt x1	0.00		0.00–10.00	V
	39	Output% at minimum V2 voltage	V2 Perc y1	0.00		0.00–100.00	%
	40	Maximum V2 input voltage	V2 Volt x2	10.00		0.00–10.00	V
	41	Output% at maximum V2 voltage	V2 Perc y2	100.00		0.00–100.00	%
	42	Minimum V2 input voltage’	V2 -Volt x1’	0.00		0–10	V
	43	Output% at minimum V2 voltage’	V2 -Perc y1’	0.00		0–100	%
	44	Maximum V2 input voltage’	V2 -Volt x2’	-10.00		0–10	V
	45	Output% at maximum V2’ voltage	V2 -Perc y2’	-100.00		-100–0	%
	46	Invert V2 rotational direction	V2 Inverting	No		No/Yes	-
	47	V2 quantizing level	V2 Quantizing	0.04		0.00*, 0.04–10.00	%

* Quantizing is disabled if “0” is selected.

6.1.4.2 Setting a Reference Frequency using Input Current at I2 Terminal

Set the DRV-07 (Frequency reference source) to “5 (I2)” and apply an input voltage of 0–20 mA to the I2 terminal.

Group	Code	Name	LCD Display	Parameter Setting		Setting Range	Unit
DRV	07	Frequency reference source	Freq Ref Src	5	I2	0–9	-
	50	I2 input monitor	I2 Monitor	0.00		0.00–20.00	mA
	52	I2 input filter time constant	I2 Filter	10		0–10000	ms
	53	I2 minimum input current	I2 Curr x1	4.00		0.00–20.00	mA
	54	I2 output at minimum current (%)	I2 Perc y1	0.00		0–100	%
	55	I2 maximum input current	I2 Curr x2	20.00		4.00–20.00	mA
	56	I2 output at maximum current (%)	I2 Perc y2	100.00		0.00–100.00	%
	61	I2 rotation direction options	I2 Inverting	0	No	0–1	-
	62	I2 quantizing level	I2 Quantizing	0.04		0.00*, 0.04–10.00	%

* Quantizing is disabled if “0” is selected.

6.1.5 Setting a Frequency with Pulse Input (with an optional encoder module)

After installing an optional encoder module, you can set a frequency reference by setting DRV-07 (Frequency reference source) to “9 (Pulse)” and providing a pulse frequency of 0–32.00 kHz to the pulse input terminal.

Group	Code	Name	LCD Display	Parameter Setting		Setting Range	Unit
DRV	07	Frequency reference source	Freq Ref Src	7	Encoder	0–9	-
IN	01	Frequency at maximum analog input	Freq at 100%	60.00		0.00–max. frequency	Hz
APO	01	Encoder option mode	Enc Opt Mode	2	Reference	0-2	-
	04	Encoder type selection	Enc Type Sel	0	-	0-2	-
	05	Encoder pulse selection	Enc Pulse Sel	2	A	0-2	-
	06	Encoder pulse number	Enc Pulse Num	-		10-5000	-
	09	Pulse input display	Pulse Monitor	-		-	kHz
	10	Encoder filter time constant	Enc Filter	10		0-10000	ms
	93	Minimum pulse input	Enc Pulse x1	0.0		0-100	kHz
	94	Minimum pulse Output%	Enc Perc Y1	0.00		0-100	%
	95	Maximum pulse input	Enc Pulse x2	100.0		0-200	kHz
	96	Maximum pulse Output%	Enc Perc y2	100.00		0-100	%

* Quantizing is disabled if “0” is selected.

Pulse Input Setting Details

Code	Description
APO-01 Enc Opt Mode	Sets the encoder option mode. Set APO-01 to “2 (Reference)” to receive a pulse input for the frequency reference.
APO-04 Enc Type Sel	Sets the output type.
APO-05 Enc Pulse Sel	Selects the encoder pulse to use.
APO-06 Enc Pulse Num	Sets the number of pulses that is appropriate for the encoder specification.
APO-09 Pulse Monitor	Displays the pulse frequency supplied at the encoder option module when APO-1 is set to “2 (Reference)”.
APO-10 Enc Filter	Sets the time for the pulse input to reach 63% of its nominal frequency (when the pulse frequency is supplied in multiple steps).
APO-11 Enc Pulse x1–IN-96 Enc Perc y2	Configures the gradient level and offset values for the output frequency. 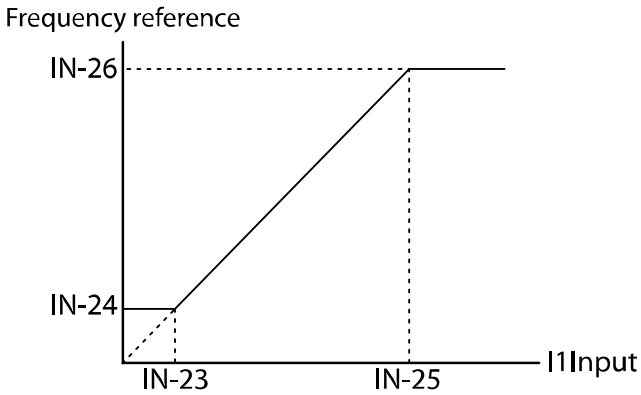

6.1.6 Setting a Frequency Reference via RS-485 Communication

Control the inverter with upper-level controllers, such as PCs or PLCs, via RS-485 communication. Set DRV-07 (Frequency reference source) to “6 (Int 485)” and use the RS-485 signal input terminals (S+/S-/SG) for communication.

Group	Code	Name	LCD Display	Parameter Setting		Setting Range	Unit
DRV	07	Frequency reference source	Freq Ref Src	6	Int 485	0–9	-
COM	01	Integrated RS-485 communication inverter ID	Int485 St ID	-	1	1–250	-
	02	Integrated communication protocol	Int485 Proto	0	ModBus RTU	0–2	-
				1	ModBus ASCII		
				2	LS Inv 485		
	04	Integrated communication speed	Int485 BaudR	3	9600 bps	1200–38400	bps
	04	Integrated communication frame configuration	Int485 Mode	0	D8/PN/S1	0–3	-
				1	D8/PN/S2		
				2	D8/PE/S1		
				3	D8/PO/S1		

6.2 Frequency Hold by Analog Input

If you set a frequency reference via the analog input at the control terminal block, you can hold the operation frequency of the inverter by assigning a multi-function input as the analog frequency hold terminal. The operation frequency will be linked to the analog input signal.

Group	Code	Name	LCD Display	Parameter Setting		Setting Range	Unit
DRV	07	Frequency reference source	Freq Ref Src	0	Keypad-1	0–9	-
				1	Keypad-2		
				2	V1		
				3	I1		
				4	V2		
				5	I2		
				6	Int 485		
				7	Encoder		
				8	Field Bus		
				9	PLC		
IN	65–75	Px terminal configuration	Px Define(Px: P1–P8 [optional: P9–P11]) [Optional P9–11]	21	Analog Hold	65–75	-

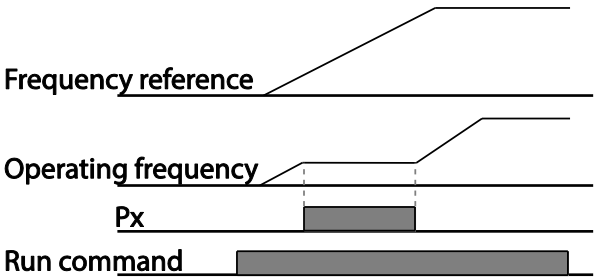

6.3 Changing the Displayed Units (Hz↔Rpm)

You can change the units used to display the operational speed of the inverter by setting DRV- 21 (Speed unit selection) to “0 (Hz Display)” or “1 (Rpm Display)”.

Group	Code	Name	LCD Display	Parameter Setting		Setting Range	Unit
DRV	21	Speed unit selection	Hz/Rpm Sel	0	Hz Display	0–1	-
				1	Rpm Display		

6.4 Setting Multi-Step Frequency

Multi-step operations can be carried out by assigning different speeds (or frequencies) to the Px terminals. Step 0 uses the frequency reference source set at DRV-07. Px terminal parameter values 7 (Speed-L), 8 (Speed-M), 9 (Speed-H), and 10 (Speed-X) are recognized as binary commands and work in combination with Fx or Rx run commands. The inverter operates according to the frequencies set at BAS-50–64 (multi-step frequency 1–15) and the binary command combinations.

Group	Code	Name	LCD Display	Parameter Setting		Setting Range	Unit
DRV	07	Frequency reference source	Freq Ref Src	-		-	-
BAS	50–64	Multi-step frequency 1–15	Step Freq - x	-		-	Hz
IN	65–75	Px terminal configuration	Px Define (Px: P1–P8 [optional: P9–P11]) [Optional P9–P11]	7	Speed-L	0–51	-
				8	Speed-M		-
				9	Speed-H		
				10	Speed-X		-
	89	Multi-step command delay time	InCheck Time	1		1–5000	ms

Multi-step Frequency Setting Details

Code	Description
BAS Group 50–64	Configure multi-step frequency 1–15.
IN-65–75 Px Define	Choose the terminals to set up as multi-step inputs, and then set the relevant codes (IN-65–75) to 7 (Speed-L), 8 (Speed-M), 9 (Speed-H), or 10 (Speed-X). Provided that terminals P6, P7, and P8 have been set to Speed-L, Speed-M and Speed-H respectively, the following multi-step operation will be available.

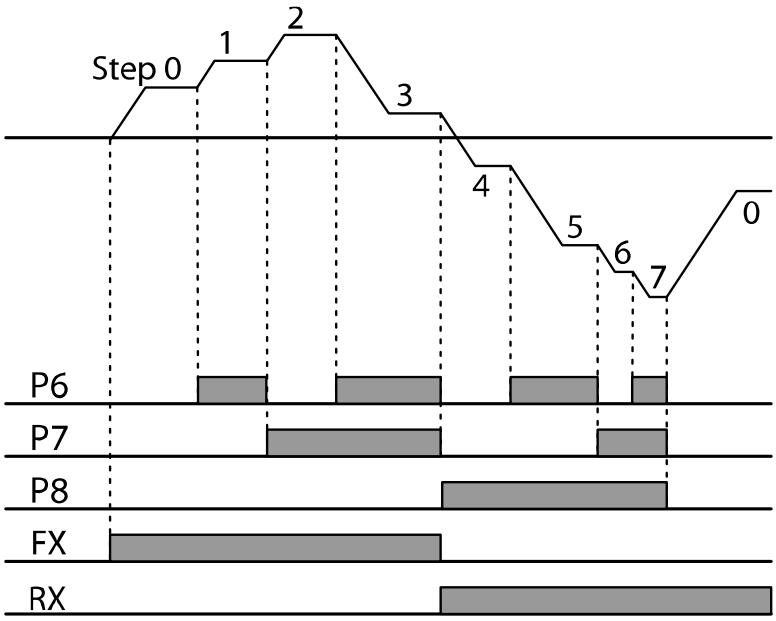

[An example of a multi-step operation]

Speed	Fx/Rx	P8	P7	P6
0	✓	-	-	-
1	✓	-	-	✓
2	✓	-	✓	-
3	✓	-	✓	✓
4	✓	✓	-	-
5	✓	✓	-	✓
6	✓	✓	✓	-
7	✓	✓	✓	✓

By setting the Speed-X, you can configure up to 16 multi-step speeds, where the highest bit is Speed-X.

Speed	Fx/Rx	P8	P7	P6	P5
0	✓	-	-	-	-

Code	Description
IN-89 InCheck Time	Set a time interval for the inverter to check for additional terminal block inputs after receiving an input signal. After IN-89 is set to 100 ms and an input signal is received at P6, the inverter will search for inputs at other terminals for 100 ms, before proceeding to accelerate or decelerate based on the configuration at P6.

1	✓	-	-	-	✓
2	✓	-	-	✓	-
3	✓	-	-	✓	✓
4	✓	-	✓	-	-
5	✓	-	✓	-	✓
6	✓	-	✓	✓	-
7	✓	-	✓	✓	✓
8	✓	✓	-	-	-
9	✓	✓	-	-	✓
10	✓	✓	-	✓	-
11	✓	✓	-	✓	✓
12	✓	✓	✓	-	-
13	✓	✓	✓	-	✓
14	✓	✓	✓	✓	-
15	✓	✓	✓	✓	✓

6.5 Command Source Configuration

Various devices can be selected as command input devices for the iS7 inverter. Input devices available include the keypad, multi-function input terminal, RS-485 communication, and field bus adapter.

Group	Code	Name	LCD Display	Parameter Setting		Setting Range	Unit
DRV	06	Command Source	Cmd Source	0	Keypad	0–5	-
				1	Fx/Rx-1		
				2	Fx/Rx-2		
				3	Int 485		
				4	Field Bus		
				5	PLC		

6.5.1 The Keypad as a Command Input Device

Set DRV-06 to “0 (Keypad)” to select the keypad as the command source.

Since the keypad is now the command source, forward or reverse operation starts when the [FWD] or [REV] key is pressed, and it stops when the [STOP/RESET] key is pressed.

Group	Code	Name	LCD Display	Parameter Setting		Setting Range	Unit
DRV	06	Command source	Cmd Source	0	KeyPad	0–5	-

6.5.2 The Terminal Block as a Command Input Device (Fwd/Rev run commands)

Multi-function terminals can be selected as a command input device. This is configured by setting DRV-06 (command source) to “1 (Fx/Rx-1)”. Select two terminals for the forward and reverse operations, and then set the relevant codes (2 of the 11 multi-function terminal codes, IN-65–75 for P1–P8 [optional: P9–P11]) to “1 (Fx)” and “2 (Rx)” respectively. This application enables both terminals to be turned on or off at the same time, constituting a stop command that will cause the inverter to stop operating.

Group	Code	Name	LCD Display	Parameter Setting		Setting Range	Unit
DRV	06	Command source	Cmd Source	1	Fx/Rx-1	0–5	-
IN	65–75	Px terminal configuration	Px Define(Px: P1– P8 [optional: P9–P11])	1	Fx	0–51	-
				2	Rx		
	88	Delay time setting	Run On Delay	-	1.00	0.00–100.00	Sec

Fwd/Rev Command by Multi-function Terminal – Setting Details

Code	Description
DRV-06 Cmd Source	Set to “1 (Fx/Rx-1)”.
IN-65–75 Px Define	Assign a terminal for forward (Fx) operation. Assign a terminal for reverse (Rx) operation.
IN-88 Run On Delay	Set the delay time if the inverter operation needs to be synchronized with other sequences. When the run command input (Fx/Rx) is given, the operation begins after the set time has elapsed.

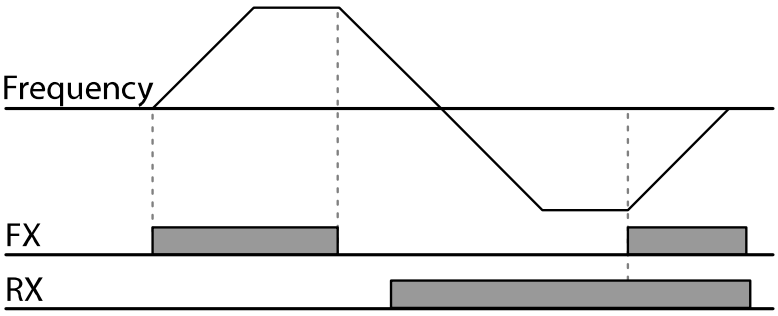

6.5.3 The Terminal Block as a Command Input Device (Run and Rotation Direction Commands)

Multi-function terminals can be selected as a command input device. This is configured by setting DRV-06 (command source) to “2 (Fx/Rx-2)”. Select two terminals for run and rotation direction commands, and then set the relevant codes (2 of the 11 multi-function terminal codes, IN-65–75 for P1–P11 [optional: P9–P11]) to “1 (Fx)” and “2 (Rx)” respectively. This application uses an Fx input as a run command, and an Rx input to change a motor’s rotation direction (On: Rx, Off: Fx).

Group	Code	Name	LCD Display	Parameter Setting		Setting Range	Unit
DRV	06	Command source	Cmd Source	2	Fx/Rx-2	0–5	-
IN	65–75	Px terminal configuration	Px Define (Px: P1–P8 [optional: P9–P11])	1	Fx	-	-
				2	Rx		
	88	Delay time setting	Run On Delay	-	1.00	0.00–100.00	Sec

Run Command and Fwd/Rev Change Command Using Multi-function Terminal – Setting Details

Code	Description
DRV-06 Cmd Source	Set to “2 (Fx/Rx-2)”.
IN-65–75 Px Define	Assign a terminal for the run command (Fx). Assign a terminal for changing the rotation direction (Rx).
IN-88 Run On Delay	Set the delay time if the inverter operation needs to be synchronized with other sequences. When the run command input (Fx/Rx) is given, the operation begins after the set time has elapsed.

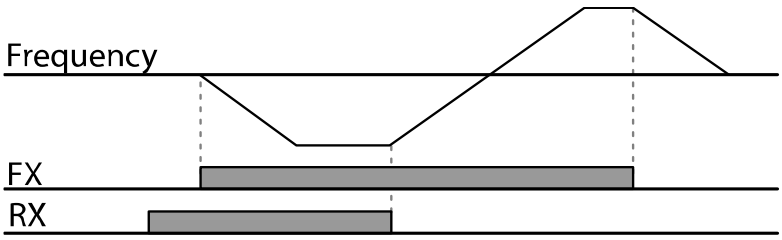

6.5.4 RS-485 Communication as a Command Input Device

Internal RS-485 communication can be selected as a command input device by setting DRV-06 (command source) in the Drive group to “3 (Int 485)”. This configuration uses upper level controllers, such as PCs or PLCs, to control the inverter by transmitting and receiving signals via the S+, S-, and RS-485 signal input terminals at the terminal block.

Group	Code	Name	LCD Display	Parameter Setting		Setting Range	Unit
DRV	06	Command source	Cmd Source	3	Int 485	0–5	-
COM	04	Integrated communication inverter ID	Int485 St ID	1		1–250	-
	05	Integrated communication protocol	Int485 Proto	0	ModBus RTU	-	-
	06	Integrated communication speed	Int485 BaudR	3	9600 bps	1200–38400	bps
	07	Integrated communication frame setup	Int485 Mode	0	D8 / PN / S1	-	-

6.6 Forward or Reverse Run Prevention

The rotation direction of motors can be configured to prevent motors from running in a forward or reverse direction. When reverse direction prevention is configured, pressing the [REV] key on the keypad will cause the motor to decelerate to 0 Hz and stop.

Group	Code	Name	LCD Display	Parameter Setting		Setting Range	Unit
ADV	09	Run prevention options	Run Prevent	0	None	0–2	-
				1	Forward Prev		
				2	Reverse Prev		

Forward/Reverse Run Prevention Setting Details

Code	Description
ADV-09 Run Prevent	Choose a direction to prevent. Setting / Description 0 None — Do not set run prevention. 1 Forward Prev — Set forward run prevention. 2 Reverse Prev — Set reverse run prevention.

6.7 Power-on Run

The Power-on Run feature can be set up to start an inverter operation after powering up based on the run commands by terminal inputs (if they are configured).

Caution

Use caution when operating the inverter with Power-on Run enabled as the motor will begin rotating when the inverter starts up.

To enable Power-on Run, set DRV-06 (command source) to “1 (Fx/Rx-1)” or “2 (Fx/Rx-2)” and ADV-10 to “1”. If a run command via a terminal input is on, the inverter starts operating according to the terminal input settings as soon as it is turned on.

Group	Code	Name	LCD Display	Parameter Setting		Setting Range	Unit
DRV	06	Command source	Cmd Source	1, 2	Fx/Rx-1 or Fx/Rx-2	0–5	-
ADV	10	Power-on run	Power-on Run	1	Yes	0–1	-

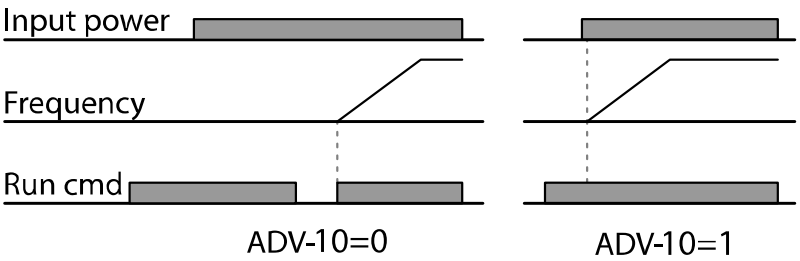

Note

- To prevent a repeat fault trip from occurring when a load, such as a fan, is free-running on a Power-on Run, set CON-71 (speed search options) bit 4 to “1”. The inverter will perform a speed search at the

beginning of the operation. If the speed search is not enabled, the inverter will start its operation in a normal V/F pattern and accelerate the motor.

- If the inverter has been turned on without Power-on Run enabled, the terminal block command must be first turned off, and then turned on again to begin the inverter's operation.

6.8 Setting Acceleration and Deceleration Times

6.8.1 Acc/Dec Time Based on Maximum Frequency

Regardless of the operating frequency, acc/dec time values can be set based on the maximum frequency. To set acc/dec time values based on the maximum frequency, set BAS-08 (Acc/Dec reference) to "0 (Max Freq)".

The acceleration time set at DRV-03 (Acceleration time) refers to the time required for the inverter to reach the maximum frequency from a stopped state (0 Hz). Likewise, the value set at DRV-04 (Deceleration time) refers to the time required to return to a stopped state (0 Hz) from the maximum frequency.

Group	Code	Name	LCD Display	Parameter Setting		Setting Range	Unit
DRV	03	Acceleration time	Acc Time	75 kW and less	20.0	0.0–600.0	sec
				90 kW and up	60.0		
	04	Deceleration time	Dec Time	75 kW and less	30.0	0.0–600.0	sec
				90 kW and up	90.0		
	20	Maximum frequency	Max Freq	60.00		0.00–400.00	Hz
BAS	08	Acc/Dec reference	Ramp T Mode	0	Max Freq	Max Freq/Delta Freq	-
	09	Time scale	Time scale	1	0.1	0–2 (0.01/0.1/1)	sec

Acc/Dec Time Based on Maximum Frequency – Setting Details

Code	Description
BAS-08 Ramp T Mode	Set BAS-08 to "0 (Max Freq)" to setup acc/dec time based on maximum frequency. Configuration / Description 0 Max Freq: Set the acc/dec time based on the maximum frequency. 1 Delta Freq: Set the acc/dec time based on the operating frequency. If, for example, the maximum frequency is 60.00 Hz, the acc/dec times are set to 5 seconds, and the frequency reference for operation is set at 30 Hz (half of 60 Hz). Therefore, the time required to reach 30 Hz is 2.5 seconds (half of 5 seconds).

<table>
<tr><th>Code</th><th>Description</th></tr>
<tr><td></td><td> 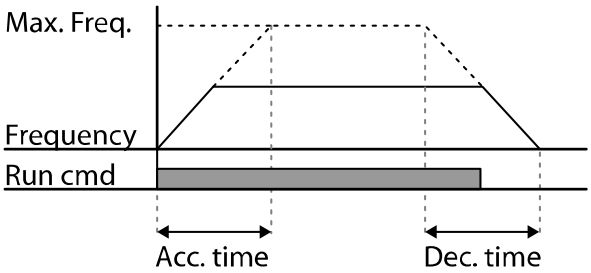
</td></tr>
<tr><td>BAS-09 Time scale</td><td>Use the time scale for all time-related values. It is particularly useful when more accurate acc/dec times are required, due to load characteristics, or when the maximum time range needs to be extended.
<table>
<tr><th colspan="2">Configuration</th><th>Description</th></tr>
<tr><td>0</td><td>0.01 sec</td><td>Sets 0.01 second as the minimum unit.</td></tr>
<tr><td>1</td><td>0.1 sec</td><td>Sets 0.1 second as the minimum unit.</td></tr>
<tr><td>2</td><td>1 sec</td><td>Sets 1 second as the minimum unit.</td></tr>
</table></td></tr>
</table>

ⓘ Caution

Note that the range of maximum time values may change automatically when the units are changed. If for example, the acceleration time is set to 6000 seconds, a time scale change from 1 second to 0.01 second will result in a modified acceleration time of 60.00 seconds.

6.8.2 Acc/Dec Time Based on Operation Frequency

Acc/Dec times can be set based on the time required to reach the next frequency from the existing operation frequency. To set the acc/dec time values based on the existing operation frequency, set BAS-08 (Acc/Dec reference) to “1 (Delta Freq)”.

Group	Code	Name	LCD Display	Settings		Setting Range	Unit
DRV	03	Acceleration time	Acc Time	20.0		0.0 - 600.0	sec
	04	Deceleration time	Dec Time	30.0		0.0 - 600.0	sec
BAS	08	Acc/Dec reference	Ramp T Mode	1	Delta Freq	Max Freq/Delta Freq	-

Acc/Dec Time Based on Operation Frequency– Setting Details

<table>
<tr><th>Code</th><th>Description</th></tr>
<tr><td>BAS-08 Ramp T Mode</td><td>Set BAS-08 to “1 (Delta Freq)” to set acc/dec times based on operation frequency.
<table>
<tr><th colspan="2">Configuration</th><th>Description</th></tr>
<tr><td>0</td><td>Max Freq</td><td>Set the acc/dec time based on the maximum frequency.</td></tr>
<tr><td>1</td><td>Delta Freq</td><td>Set the acc/dec time based on the operating frequency.</td></tr>
</table>
If the acc/dec times are set to 5 seconds, and multiple frequency references are used in the operation in 2 steps, at 10 Hz and 30 Hz, each acceleration stage will take 5 seconds (refer to the graph below).
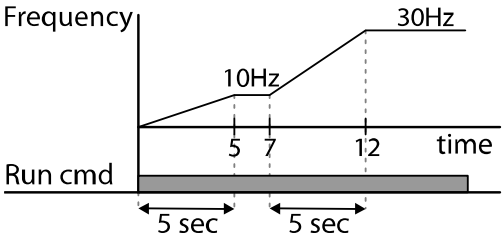
</td></tr>
</table>

6.8.3 Multi-Step Acc/Dec Time Configuration

The acc/dec times can be configured via a multi-function terminal by setting the ACC (acceleration time) and DEC (deceleration time) codes in the DRV group.

Group	Code	Name	LCD Display	Parameter Setting		Setting Range	Unit
DRV	03	Acceleration time	Acc Time	75 kW and less	20.0	0.0–600.0	sec
				90 kW and up	60.0		
	04	Deceleration time	Dec Time	75 kW and less	30.0	0.0–600.0	sec
				90 kW and up	90.0		
BAS	70, 72, 74	Multi-step acceleration time1–3	Acc Time–x	x.xx		0.0–600.0	sec
	71, 73, 75	Multi-step deceleration time1–3	Dec Time–x	x.xx		0.0–600.0	sec
IN	65–75	Px terminal configuration	Px Define (Px: P1–P8 [optional: P9–P11])	11	XCEL-L	-	-
				12	XCEL-M		
				49	XCEL-H		
	89	Multi-step command delay time	In Check Time	1		1–5000	ms

Acc/Dec Time Setup via Multi-function Terminals – Setting Details

Code	Description
BAS-70, 72, 74 Acc Time 1–3	Set multi-step acceleration time 1–3.
BAS-71, 73, 75 Dec Time 1–3	Set multi-step deceleration time 1–3.
IN-65–75 Px Define (P1–P8 [optional P9–P11])	Choose and configure the terminals to use for multi-step acc/dec time inputs. Configuration / Description 11 XCEL-L Acc/Dec command-L 12 XCEL-M Acc/Dec command-M 49 XCEL-H Acc/Dec command-H acc/dec commands are recognized as binary code inputs and will control the acceleration and deceleration based on parameter values set at BAS-70–75 If, for example, the P7 and P8 terminals are set as XCEL-L and XCEL-M respectively, the following operation will be available.

Code	Description
	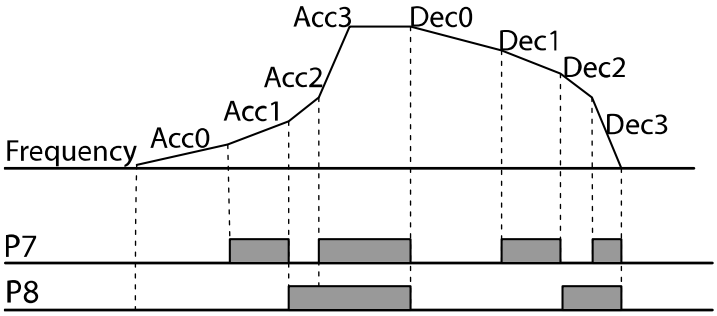 Acc/Dec time | P8 | P7 0 | - | - 1 | - | ✓ 2 | ✓ | - 3 | ✓ | ✓ [Multi-function terminal P7, P8 configuration]
IN-89 In Check Time	Set the time for the inverter to check for other terminal block inputs. If IN-89 is set to 100 ms and a signal is supplied to the P6 terminal, the inverter searches for other inputs over the next 100 ms. When the time expires, the acc/dec time will be set based on the input received at P6.

6.8.4 Configuring Acc/Dec Time Switch Frequency

By configuring the switch frequency, you can switch between two different sets of acc/dec times (acc/dec gradients) without configuring the multi-function terminals.

Group	Code	Name	LCD Display	Parameter Setting	Setting Range	Unit
DRV	03	Acceleration time	Acc Time	10.0	0.0–600.0	sec
	04	Deceleration time	Dec Time	10.0	0.0–600.0	sec
BAS	70	Multi-step acceleration time1	Acc Time-1	20.0	0.0–600.0	sec
	71	Multi-step deceleration time1	Dec Time-1	20.0	0.0–600.0	sec
ADV	60	Acc/dec time switch frequency	Xcel Change Fr	30.00	0–Maximum frequency	Hz/RPM

Acc/Dec Time Switch Frequency Setting Details

Code	Description
ADV-60 Xcel Change Fr	After the acc/dec switch frequency has been set, the acc/dec gradients configured at BAS-70 and 71 will be used when the inverter's operation frequency is at or below the switch frequency. If the operation frequency exceeds the switch frequency, the gradient level configured for the acceleration and deceleration times (set at DRV-03 and DRV-04) will be used. If you configure the P1–P8 [optional: P9–P11]) multi-function input terminals for multi-step acc/dec gradients (XCEL-L, XCEL-M, XCEL-H), the inverter will operate based on the acc/dec inputs at the terminals regardless of the acc/dec switch frequency configurations. 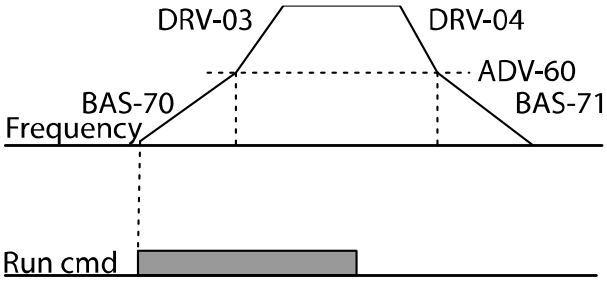

6.9 Output Voltage Setting

Output voltage settings are required when a motor's rated voltage differs from the input voltage to the inverter. Set BAS-15 to configure the motor's rated operating voltage. The set voltage becomes the output voltage of the inverter's base frequency. When the inverter operates above the base frequency, and when the motor's voltage rating is lower than the input voltage at the inverter, the inverter adjusts the voltage and supplies the motor with the voltage set at BAS-15 (motor-rated voltage). If the motor's rated voltage is higher than the input voltage at the inverter, the inverter will supply the inverter input voltage to the motor.

If BAS-15 (motor-rated voltage) is set to "0," the inverter corrects the output voltage based on the input voltage in the stopped condition. If the frequency is higher than the base frequency andwhen the input voltage is lower than the parameter setting, the input voltage will be the inverter output voltage.

Group	Code	Name	LCD Display	Parameter Setting	Setting Range	Unit
BAS	15	Motor rated voltage	Rated Volt	220	0, 180–480	V

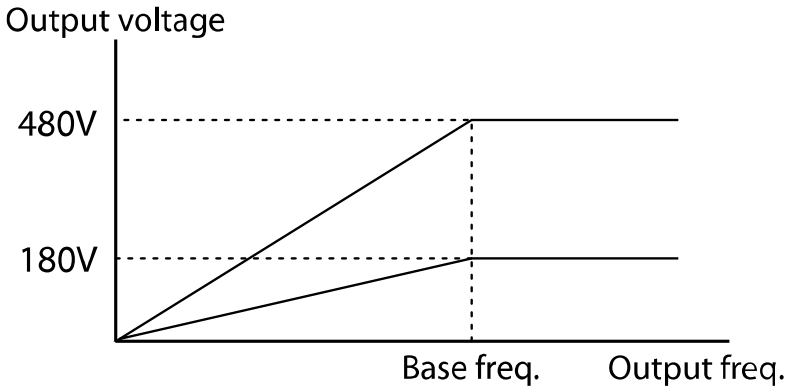

7 Troubleshooting and Maintenance

This chapter explains how to troubleshoot a problem when inverter protective functions, fault trips, warning signals, or faults occur. If the inverter does not work normally after following the suggested troubleshooting steps, please contact the LSELECTRIC Customer Support.

Danger

Wait at least 10 minutes before opening the covers and exposing the terminal connections. Before working on the inverter, test the connections to ensure the DC voltage has been fully discharged. Personal injury or death by electric shock may result if the DC voltage has not been discharged.

7.1 Protection Functions

7.1.1 Protection from Output Current and Input Voltage

Type	Category	Details	Remarks
Over Load	Latch	Displayed when the motor overload trip is activated and the actual load level exceeds the set level. Operates when PRT-20 is set to any value other than “0”.	-
Under Load	Latch	Displayed when the motor underload trip is activated and the actual load level is less than the set level. Operates when PRT-27 is set to any value other than “0”.	-
Over Current1	Latch	Displayed when the inverter output current exceeds 200% of the rated current.	-
Over Voltage	Latch	Displayed when the internal DC circuit voltage exceeds the specified value.	-
Low Voltage	Level	Displayed when the internal DC circuit voltage is less than the specified value.	-
Ground Trip	Latch	Displayed when a ground fault trip occurs on the output side of the inverter and causes the current to exceed the specified value. The specified value varies depending on the inverter capacity.	-
E-Thermal	Latch	Displayed based on inverse time limit thermal characteristics to prevent motor overheating. Operates when PRT-40 is set to any value other than “0”.	-
Out Phase Open	Latch	Displayed when a 3-phase inverter output has one or more phases in an open circuit condition. Operates when bit 1 of PRT-05 is set to “1”.	-

Type	Category	Details	Remarks
In Phase Open	Latch	Displayed when a 3-phase inverter input has one or more phases in an open circuit condition. Operates only when bit 2 of PRT-05 is set to “1”.	-
Inverter OLT	Latch	Displayed when the inverter has been protected from overload and resultant overheating, based on inverse time limit thermal characteristics. Allowable overload rates for the inverter are 150% for 1 min and 200% for 4 sec. Protection is based on the inverter rated capacity, and may vary depending on the device’s capacity.	-
Low Voltage2	Latch	Displayed when the internal DC circuit voltage is less than the specified value during inverter operation.	-
Safety Opt Err	Latch	Displayed when a safety feature is activated to block the inverter output during an emergency.	-

7.1.2 Abnormal Circuit Conditions and External Signals

Type	Category	Details	Remarks
Fuse Open	Latch	Displayed when the inverter DC fuse is exposed to an overcurrent above 30 kW.	-
Over Heat	Latch	Displayed when the temperature of the inverter heat sink exceeds the specified value.	-
Over Current2	Latch	Displayed when the DC circuit in the inverter detects a specified level of excessive, short circuit current.	-
External Trip	Latch	Displayed when an external fault signal is provided by the multi-function terminal. Set one of the multi-function input terminals at IN-65–72 to “3 (External Trip)” to enable external trip.	-
BX	Level	Displayed when the inverter output is blocked by a signal provided from the multi-function terminal. Set one of the multi-function input terminals at IN-65–71 to “4 (BX)” to enable the input block function.	-
H/W-Diag	Fatal	Displayed when an error is detected in the memory (EEPRom), analog-digital converter output (ADC Off Set), or CPU watchdog (Watch Dog-1, Watch Dog-2). EEP Err: An error in reading/writing parameters due to a keypad or memory (EEPRom) fault. ADC Off Set: An error in the current sensing circuit (U/V/W terminal, current sensor, etc.). Gate Pwr Loss: An interruption in the supply of power to the IGBT Gate of a product rated 30 kW or higher (when a fault occurs in a 22 kW-rated product, the capacity settings should be	-

Type	Category	Details	Remarks
		checked).	
NTC Open	Latch	Displayed when an error is detected in the temperature sensor of the Insulated Gate Bipolar Transistor (IGBT).	-
Fan Trip	Latch	Displayed when an error is detected in the cooling fan. Set PRT-79 to “0” to activate fan trip (for models with a capacity below 22 kW).	-
IP54 FAN Trip	Latch	Displayed when the IP54 product detects an internal circulation at the cooling fan.	Only applied to IP54 product
Thermal Trip	Latch	Displayed when the resistance value exceeds the prescribed value after the external temperature sensor is connected to the terminal block. Operates when PRT-34 is set to any value other than “0”.	-
ParaWrite Trip	Latch	Displayed when communication fails during parameter writing. Occurs when using an LCD keypad due to a control cable fault or a bad connection.	-
Over Speed Trip	Latch	Displayed when the motor speed exceeds the overspeed detection level. Set the detection level at PRT-70.	-
Dev Speed Trip	Latch	Displayed when the speed that received feedback from the encoder exceeds the set variation value. Operates when PRT-73 is set to “1”.	-
Encoder Trip	Latch	Displayed when PRT-77 Enc Wire Check is set to “1” and an abnormality is detected for the set period of time.	-
Pre-PID Fail	Latch	Displayed when pre-PID is operating with functions set at APP-34–36. A fault trip occurs when a controlled variable (PID feedback) is measured below the set value and the low feedback continues, as it is treated as a load fault.	-
Ext-Brake	Latch	When Control Mode (DRV-09) is V/F or Sensorless1 or Sensorless2: The trip occurs when OUT-31–32 is set to BR control and the output current is lower than ADV-41 value (% for BAS-13) for about 10 seconds. When Control Mode (DRV-09) is Vector: The trip occurs when OUT-31-32 is set to BR Control and the current is lower than half of the BAS-14 value.	-

7.1.3 Keypad and Optional Expansion Modules

Type	Category	Details	Remarks
Lost Keypad	Level	Displayed when operating commands come from the keypad or there is any problem with the communication between the keypad and inverter's main body in Keypad JOG mode. Operates when PRT-11 is set to any value other than "0" (occurs 2 seconds after the communication is interrupted).	-
Lost Command	Level	Displayed when a frequency or operation command error is detected during inverter operation by controllers other than the keypad (e.g. using a terminal block and a communication mode). Set PRT-12 to any value other than "0".	-
Option Trip-1	Latch	Displayed when the extension module is removed from option slot No. 1 after it was installed while the inverter was turned on, or when communication is not available with the inverter.	-
Option Trip-2	Latch	Displayed when the extension module is removed from option slot No. 2 after it was installed during power supply, or when communication is not available with the inverter.	-
Option Trip-3	Latch	Displayed when the extension module is removed from option slot No. 3 after it was installed during power supply, or when communication is not available with the inverter.	-
I/O Board Trip	Latch	Displayed when the basic and insulated I/O boards are disconnected or have a connection fault.	-

Note

Level: When the fault is corrected, the trip or warning signal disappears and the fault is not saved in the fault history.

Latch: When the fault is corrected and a reset input signal is provided, the trip or warning signal disappears.

Fatal: When the fault is corrected, the fault trip or warning signal disappears only after the user turns off the inverter, waits until the charge indicator light goes off, and turns the inverter on again. If the inverter is still in a fault condition after it is powered on again, please contact the supplier or the LSELECTRIC Customer Support.

The function for saving the fault history and the fault signal output may not be performed if the functions are not set or the inverter is seriously damaged.

7.2 Warning Messages

Type	Description
Over Load	Displayed when the motor is overloaded. Operates when PRT-17 is set to “1”. To operate, select “4 (Over Load)”. Set the digital output terminal or relay (OUT31-33) to “4 (Over Load)” to receive overload warning output signals.
Under Load	Displayed when the motor is underloaded. Operates when PRT-25 is set to “1”. Set the digital output terminal or relay (OUT31-33) to “6 (Under Load)” to receive underload warning output signals.
Inv Over Load	Displayed when the accumulated overload time is equivalent to 60% of the inverter overheat protection (inverter IOLT) level. Set the digital output terminal or relay (OUT31-33) to “5 (IOL)” to receive inverter overload warning output signals.
Lost Command	The Lost Command warning alarm occurs even when PRT-12 is set to “0”. The warning alarm occurs based on the condition set at PRT-13-15. Set the digital output terminal or relay (OUT31-33) to “12 (Lost Command)” to receive lost command warning output signals.
Fan Warning	Displayed when an error is detected from the cooling fan while PRT-79 is set to “1”. Set the digital output terminal or relay (OUT31-33) to “8 (Fan Warning)” to receive fan warning output signals.
DB Warn %ED	Displayed when the DB resistor usage rate exceeds the set value. Set the detection level at PRT-66.
Enc Conn Check	Displayed when “3 (Enc Test)” is set at BAS-20 (Auto Tuning) and no signal is input during the encoder test. Set the ENC Tune at OUT31–33 to release a signal.
Enc Dir Check	Displayed when “3 (Enc Test)” is set at BAS-20 (Auto Tuning) and the settings for A and B encoder phases are changed or are the opposite during the encoder test. Set the ENC Dir at OUT31-33 to release a signal.
Lost Keypad	Displayed when operating commands come from the keypad or there is any problem with the communication between the keypad and inverter’s main body in Keypad JOG mode after setting PRT-11 (Lost KPD Mode) to “0”. Set the Lost Keypad (29) at OUT31-33.
Check Line PLZ	Displayed when there is any problem with communication between the keypad and the iS7 Control CPU (control connection cables).
Fire Mode	Displayed when the fire function is activated. If a contact signal output is required, set the Fire Mode (37) at OUT31-33.
PID Sleep	Displayed when the PID Sleep mode is activated. An alarm is generated to distinguish PID sleep mode from operation stop status.
AUX Power On	Displayed when the AUX Power option is activated. When the inverter main power is Off, a low voltage trip does not occur and an auxiliary power option alarm occurs.

7.3 Troubleshooting Fault Trips

Type	Problem	Solution
Over Load	The load is greater than the motor's rated capacity.	Ensure that the motor and inverter have appropriate capacity ratings.
	The set value for the overload trip level (PRT-21) is too low.	Increase the set value for the overload trip level.
Under Load	There is a motor-load connection problem.	Replace the motor and inverter with lower capacity models.
	The set value for the underload level (PRT-29 and PRT-30) is less than the system's minimum load.	Increase the set value for the underload level.
Over Current1	Acc/dec time is too short compared to load inertia (GD2).	Increase acc/dec time.
	The inverter load is greater than the rated capacity.	Replace the inverter with a model that has increased capacity.
	The inverter supplied an output while the motor was idling.	Operate the inverter after the motor has stopped or use the speed search function (CON-60).
	The mechanical brake of the motor is operating too fast.	Check the mechanical brake.
Over Voltage	The deceleration time is too short for the load inertia (GD2).	Increase the deceleration time.
	A generative load occurs at the inverter output.	Use the braking unit.
	The input voltage is too high.	Check if the input voltage is above the specified value.
	The set value for electronic thermal protection is too low.	Set an appropriate electronic thermal level.
	The inverter has been operated at a low speed for an extended period.	Replace the motor with a model that supplies extra power to the cooling fan.
Low Voltage /Low Voltage2	The input voltage is too low.	Check if the input voltage is below the specified value.
	A load greater than the power capacity is connected to the system (e.g. a welder, direct motor connection, etc.)	Increase the power capacity.
	The magnetic contactor connected to the power source has a faulty connection.	Replace the magnetic contactor.
Ground Trip	A ground fault has occurred in the	Check the output wiring.

Type	Problem	Solution
	inverter output wiring.	
	The motor insulation is damaged.	Replace the motor.
E-Thermal	The motor has overheated.	Reduce the load or operation frequency.
	The inverter load is greater than the rated capacity.	Replace the inverter with a model that has increased capacity.
Out Phase Open	The magnetic contactor on the output side has a connection fault.	Check the magnetic contactor on the output side.
	The output wiring is faulty.	Check the output wiring.
In Phase Open	The magnetic contactor on the input side has a connection fault.	Check the magnetic contactor on the input side.
	The input wiring is faulty.	Check the input wiring.
	The DC link capacitor needs to be replaced.	Replace the DC link capacitor. Contact the retailer or the LSELECTRIC Customer Support.
Inverter OLT	The load is greater than the rated motor capacity.	Replace the motor and inverter with models that have increased capacity.
	The torque boost level is too high.	Reduce the torque boost level.
Over Heat	There is a problem with the cooling system.	Check if a foreign object is obstructing the air inlet, outlet, or vent.
	The inverter cooling fan has been operating for an extended period.	Replace the cooling fan.
	The ambient temperature is too high.	Keep the ambient temperature below 50℃.
Over Current2	The output wiring has short-circuited.	Check the output wiring.
	There is a fault with the electronic semiconductor (IGBT).	Do not operate the inverter. Contact the retailer or the LSELECTRIC Customer Support.
NTC Open	The ambient temperature is too low.	Keep the ambient temperature above 10℃.
	There is a fault with the internal temperature sensor.	Contact the retailer or the LSELECTRIC Customer Support.
FAN Trip	There is a foreign object in the inverter vent where the fan is located.	Remove the foreign object from the air inlet or outlet.
	The cooling fan needs to be replaced.	Replace the cooling fan.
IP54 FAN Trip	The fan connector is not connected.	Connect the fan connector.
	The power connector for the internal fan PCB board is not connected.	Connect the power connector for the internal fan PCB board.

Type	Problem	Solution
	The cooling fan needs to be replaced.	Replace the cooling fan.
No Motor Trip	The motor is not connected to the inverter output.	Check the wiring connections.
	The current level for trip detection is not set properly.	Check the values of both BAS-13 (Rated current) and PRT-32 (No Motor Level).

7.4 Replacing the Cooling Fan

7.4.1 Products Rated below 7.5 kW

To replace the cooling fan, push the bracket on the bottom in the direction of the arrows in the diagram below and then pull it forward. Then, disconnect the fan connector.

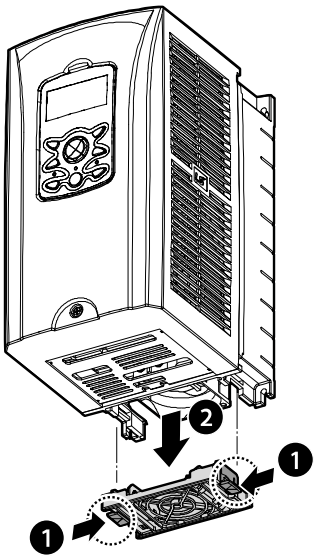

<Below 3.7 kW>

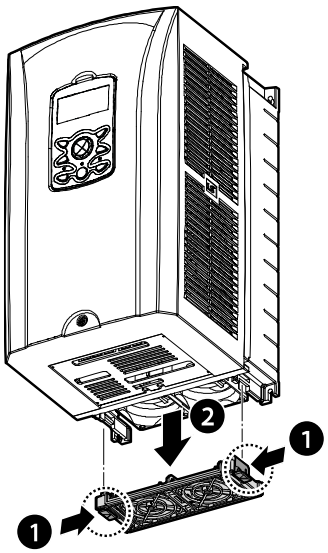

<Below 7.5 kW>

7.4.2 Products Rated at 11-15 kW 200 V/400 V and 18.5-22 kW 400 V

To replace the cooling fan, loosen the screws at the bottom of the input and output terminals and disconnect the fan connector.

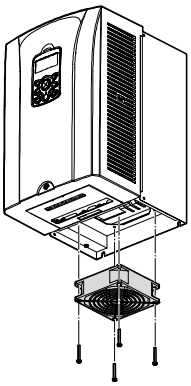

7.4.3 Products Rated at more than 30 kW (200 V) / 90 kW (400 V), and 18.5–22 kW (200 V) / 30–75 kW (200/400 V)

To replace the cooling fan, loosen the screws at the top of the product and disconnect the fan connector.

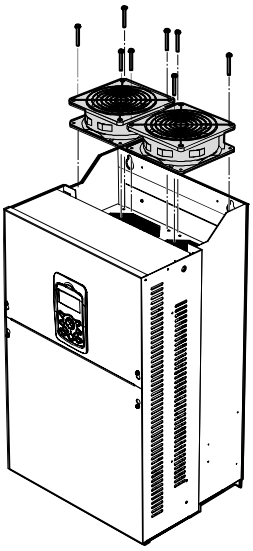

Model types > 30 kW (200 V) ,
Model types > 90 kW (400 V)

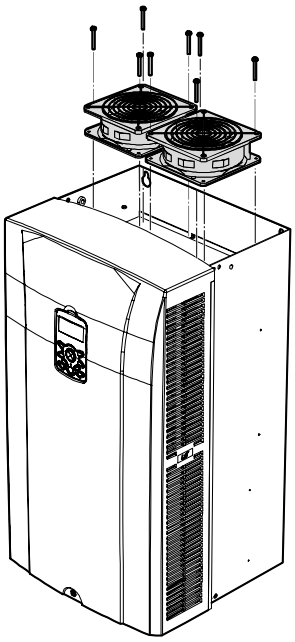

18.5–22 kW (200 V),
30–75 kW (400V)

7.5 Daily and Regular Inspection Lists

Inspection area	Inspection item	Inspection details	Inspection Cycle			Inspection method	Judgment standard	Inspection equipment
			Daily	Regular (Year)				
				1	2			
Total	Ambient environment	Is the ambient temperature and humidity within the designated range, and is there any dust or foreign objects present?	O			Visual inspection	No ice (ambient temperature: -10℃ –+40℃) and no condensation (ambient humidity below 50%)	Thermometer, hygrometer, recorder

Inspection area	Inspection item	Inspection details	Inspection Cycle			Inspection method	Judgment standard	Inspection equipment
			Daily	Regular (Year)				
				1	2			
	Inverter	Are there any abnormal vibrations or noise?	O			Visual inspection	No abnormality	
	Power voltage	Are the input and output voltages normal?	O			Measure voltages between R/S/T phases in the inverter terminal block.		Digital multimeter, tester
Input/Output circuit	Total	1) Megger test (between input/output terminals and and earth terminal) 2) Is there anything loose in the device? 3) Is there any evidence of overheating in each part? 4) Cleaning		O O O	O	1) Disconnect the inverter and short R/S/T/U/V/W terminals, and then measure from each terminal to the ground terminal using Megger test equipment. 2) Tighten up all screws. 3) Visual inspection	1) Over 5MΩ 2), 3) No matter	DC 500 V Megger
	Cable connections	1) Are there any corroded cables? 2) Is there any damage to cable insulation?		O O		Visual inspection	No abnormality	
	Terminal block	Is there any damage?		O		Visual inspection	No abnormality	
	Smoothing condenser	1) Is liquid leaking inside? 2) Is the safety apparatus in position? Is there any protuberance? 3) Check the power failure capacity.	O O	O		1), 2) Visual inspection 3) Measure with a capacity meter.	1),2) No abnormality 3) Rated capacity over 85%	Capacity meter
	Relay	1) Is there any chattering noise during operation? 2) Is there any damage to the		O O		1), 2) Visual inspection	1),2) No abnormality	

Inspection area	Inspection item	Inspection details	Inspection Cycle			Inspection method	Judgment standard	Inspection equipment
			Daily	Regular (Year)				
				1	2			
		contacts?						
	Braking resistor	1) Is there any damage from resistance? 2) Check for disconnection.		O O		1) Visual inspection 2) Disconnect one side and measure with a tester.	1) No abnormality 2) Must be within ±10% of the rated value of the resistor.	Digital multimeter / analog tester

Caution

Do not perform a megger test (insulation resistance test) on the control circuit of the inverter.

Inspection area	Inspection item	Inspection details	Inspection Cycle			Inspection method	Judgment standard	Inspection equipment
			Daily	Regular (Year)				
				1	2			
Control circuit Protection circuit	Operation check	1) Check for output voltage imbalance while the inverter is in operation. 2) Is there an error in the display circuit after the sequence protection test?		O O		1) Measure voltage between the inverter output terminals U/V/W. 2) Test the inverter output protection in both short and open circuit conditions.	1) Balance the voltage between phases: within 4 V for 200 V series and within 8 V for 400 V series. 2) The circuit must work according to the sequence.	Digital multimeter or DC voltmeter
Cooling system	Cooling fan	1) Is there any abnormal vibration or sound? 2) Are any of the fan parts loose?	O	O		1) Turn it manually while the inverter is turned off. 2) Check all connected parts and tighten all screws.	1) It should turn smoothly. 2) No abnormality	
Display	Meter	Is the display value normal?	O	O		Check the command value on the display device.	Specified and managed values must match.	Voltmeter, ammeter, etc.
Motor	Total	1) Are there any abnormal vibrations or sound? 2) Is there any abnormal smell?	O O			1) Visual inspection 2) Check the abnormality, such as overheating, damage, etc.	No abnormality	
	Isolation resistance	Megger test (between the input, output and earth terminals).			O	Disconnect the cables for terminals U/V/W and test the wiring.	Must be above 5 MΩ.	DC 500 V Megger

Caution

If the inverter has not been operated for a long time, capacitors lose their charging capability and are depleted. To prevent depletion, turn on the inverter once a year and allow it to operate for 30-60 minutes. Run the inverter under no-load conditions.

8 Table of Functions

8.1 Parameter Mode – DRV Group (➔DRV)

DRV Group (PAR ➔ DRV)

No.	Communi-cation Address	LCD Display	Name	Setting Range	Initial Value	Shift in Opera-tion	Note1) Control Mode				
							V/F	SL	VC	SLT	VCT
00	-	Jump Code	Jump code	1-99	9	O	O	O	O	O	O
01	0h1101	Cmd Frequency	Target frequency	Starting frequency -maximum frequency (Hz)	0.0	O	O	O	O	X	X
02	0h1102	Cmd Torque	Torque command	-180–180 (%)	0.0	O	X	X	X	O	O
03	0h1103	Acc Timed	Acceleration time	0–600 (sec)	Below 75 kW 20.0 Above 90 kW 60.0	O	O	O	O	O	O
04	0h1104	Dec Time	Deceleration time	0–600 (sec)	Below 75 kW 30.0 Above 90 kW 90.0	O	O	O	O	O	O
06	0h1106	Cmd Source	Command source	0 Keypad 1 Fx/Rx-1 2 Fx/Rx-2 3 Int 485 4 Field Bus 5 PLC	1:Fx/Rx-1	X	O	O	O	O	O
07	0h1107	Freq Ref Src	Frequency reference source	0 Keypad-1 1 Keypad-2 2 V1	0:Keypad-1	X	O	O	O	X	X
08	0h1108	Trq Ref Src	Torque reference source	3 I1 4 V2 5 I2 6 Int 485 7 Encoder 8 FieldBus 9 PLC 10 Synchro 11 Binary		X	X	X	X	O	O
09 Note1)	0h1109	Control Mode	Control mode	0 V/F 1 V/F PG 2 Slip Compen 3 Sensorless-1 4 Sensorless-2 5 Vector	0:V/F	X	O	O	O	O	O

* The grey cells indicate a hidden code which is only visible when setting a code.

Note 1) Effectiveness of each code according to the Control Mode setting.

V/F: V/Fmode (PG included), SL: Sensorless-1, 2 mode, VC: Vector mode, SLT: Sensorless-1, 2 Torque mode,

VCT: Vector Torque mode, Refer to the Options manual for options.

DRV Group (PAR ➔ DRV)

No.	Communication Address	LCD Display	Name	Setting Range	Initial Value	Shift in Operation	Control Mode V/F	SL	VC	SLT	VCT
10	0h110A	Torque Control	Torque control	0 No 1 Yes	0: No	X	X	X	X	O	O
11	0h110B	Jog Frequency	Jog frequency	0.5–maximum frequency (Hz)	10.00	O	O	O	O	O	O
12	0h110C	Jog Acc Time	Jog run acceleration time	0–600 (sec)	20.0	O	O	O	O	O	O
13	0h110D	Jog Dec Time	Jog run deceleration time	0–600 (sec)	30.0	O	O	O	O	X	X
14	0h110E	Motor Capacity	Motor capacity	0:0.2kW, 1:0.4kW 2:0.75kW, 3:1.5kW 4:2.2kW, 5:3.7kW 6:5.5kW, 7:7.5kW 8:11kW, 9:15kW 10:18.5kW, 11:22kW 12:30kW, 13:37kW 14:45kW, 15:55kW 16:75kW, 17:90kW 18:110kW, 9:132kW 20:160kW, 1:185kW 22:220kW,23:280kW 24:315kW,25:375kW 26:450kW	Dependent on inverter capacity	X	O	O	O	O	O
15	0h110F	Torque Boost	Torque boost method	0 Manual 1 Auto 2 Advanced Auto	0:Manual	X	O	X	X	X	X
16 Note 2)	0h1110	Fwd Boost	Forward torque boost	0–15 (%)	Below 75kW 2.0 Above 90kW 1.0	X	O	X	X	X	X
17	0h1111	Rev Boost	Reverse torque boost	0–15(%)	Below 75kW 2.0 Above 90kW 1.0	X	O	X	X	X	X
18	0h1112	Base Freq	Base frequency	30–400 (Hz)	60.00	X	O	O	O	O	O
19	0h1113	Start Freq	Starting frequency	0.01–10 (Hz)	0.50	X	O	X	X	X	X
20	0h1114	Max Freq	Maximum frequency	40–400	60.00	X	O	O	O	O	O
21	0h1115	Hz/Rpm Sel	Speed unit selection	0 Hz Display 1 Rpm Display	0:Hz	O	O	O	O	O	O
25	0h1119	Output Freq	Output speed monitoring	0-Max Frequency	0.00	O	O	O	O	O	O

* The grey cells indicate a hidden code which is only visible when setting a code.

Note 2) DRV-16–17 displayed only when DRV-15 (Torque Boost) is set as “Manual” or “Advanced Auto”.

DRV Group (PAR ➔ DRV)

No.	Communi-cation Address	LCD Display	Name	Setting Range	Initial Value	Shift in Opera-tion	Control Mode				
							V/F	SL	VC	SLT	VCT
26 Note2)	0h111A	Adv ATB Filter	Adv ATB Filter	1~1000[msec]	100	O	X	X	X	O	O
27	0h111B	Adv ATB M Gain	Adv ATB M Gain	0~300.0[%]	50.0	O	O	O	O	O	O
28	0h111C	Adv ATB G Gain	Adv ATB G Gain	0~300.0[%]	50.0	O	O	O	O	O	O
30	0h111E	kW/HP Select	kW/HP Select	0 kW 1 HP	0: kW	O	O	O	O	X	X
87	0h1157	Code Version	Inverter Code Version	-	-	X	O	O	O	O	O

* The grey cells indicate a hidden code which is only visible when setting a code.

Note 3)) DRV-26~28 code is displayed only when DRV-15 (Torque Boost) code value is “Advanced Auto

8.2 Parameter Mode – Basic Function Group (➔BAS)

BAS Group(PAR ➔ BAS)

No.	Communi-cation Address	LCD Display	Name	Setting Range		Initial Value	Shift in Opera-tion	Control Mode				
								V/F	SL	VC	SLT	VCT
00	-	Jump Code	Jump code	0-99		20	O	O	O	O	O	O
01	0h1201	Aux Ref Src	Auxiliary reference source	0	None	0:None	X	O	O	O	X	X
				1	V1							
				2	I1							
				3	V2							
				4	I2							
				5	Pulse							
02 Note3)	0h1202	Aux Calc Type	Auxiliary command calculation type	0	M+(G*A)	0: M+(G*A)	X	O	O	O	X	X
				1	M*(G*A)							
				2	M/(G*A)							
				3	M+(M*(G*A))							
				4	M+G*2(A-50%)							
				5	M*(G*2(A-50%))							
				6	M/(G*2(A-50%))							
				7	M+M*G*2(A-50%)							
03	0h1203	Aux Ref Gain	Auxiliary command gain	-200.0–200.0 (%)		100.0	O	O	O	O	X	X
04	0h1204	Cmd 2nd Src	Second command source	0	Keypad	1: Fx/Rx-1	X	O	O	O	O	O
				1	Fx/Rx-1							
				2	Fx/Rx-2							
				3	Int 485							
				4	FieldBus							
				5	PLC							
05	0h1205	Freq 2nd Src	Second frequency source	0	Keypad-1	0:Keypad-1	O	O	O	O	X	X

* The grey cells indicate a hidden code which is only visible when setting a code.

Note 3) BAS-02 code is displayed only when BAS-01 (Aux Ref Src) code has a value other than “None”.

BAS Group (PAR ➔ BAS)

No.	Communi-cation Address	LCD Display	Name	Setting Range		Initial Value		Shift in Opera-tion	Control Mode				
									V/F	SL	VC	SLT	VCT
06	0h1206	Trq 2nd Src	Second torque command source	1	Keypad-2	0:Keypad-1		O	X	X	X	O	O
				2	V1								
				3	I1								
				4	V2								
				5	I2								
				6	Int 485								
				7	Encoder								
				8	FieldBus								
				9	PLC								
				10	Synchro								
				11	Binary Type								
				12	Keypad-2								
07	0h1207	V/F Pattern	V/F pattern options	0	Linear	0:Linear		X	O	O	X	X	X
				1	Square								
				2	User V/F								
				3	Square2								
08	0h1208	Ramp T Mode	Acc/Dec standard frequency	0	Max Freq	0:Max Freq		X	O	O	O	X	X
				1	Delta Freq								
09	0h1209	Time Scale	Time scale settings	0	0.01 sec	1:0.1 sec		X	O	O	O	X	X
				1	0.1 sec								
				2	1 sec								
10	0h120A	60/50 Hz Sel	Input power frequency	0	60 Hz	0:60 Hz		X	O	O	O	O	O
				1	50 Hz								
11	0h120B	Pole Number	Number of motor poles	248		Dependent on inverter capacity		X	O	O	O	O	O
12	0h120C	Rated Slip	Rated slip speed	0–3000 (rpm)				X	O	O	O	O	O
13	0h120D	Rated Curr	Motor rated current	1–1000 (A)				X	O	O	O	O	O
14	0h120E	Noload Curr	Motor no-load current	0.5–1000 (A)				X	O	O	O	O	O
15	0h120F	Rated Volt	Motor rated voltage	180–480 (V)		0		X	O	O	O	O	O
16	0h1210	Efficiency	Motor efficiency	70–100 (%)		Dependent on inverter capacity		X	O	O	O	O	O
17	0h1211	Inertia Rate	Load inertia rate	0–8				X	O	O	O	O	O
18	0h1212	Trim Power %	Power display adjustment	70–130 (%)				O	O	O	O	O	O
19	0h1213	AC Input Volt	Input power voltage	170–230 (V)		220 V	220	O	O	O	O	O	O
				380-480 (V)		44x0 V	380						
20	-	Auto Tuning	Auto tuning	0	None	0:None		X	X	O	O	O	O
				1	All								
				2	ALL(Stdstl)								
				3	Rs+Lsigma								
				4	Enc Test								
				5	Tr								
				6	Tr(Stdstl)								

BAS Group (PAR ➔ BAS)

No.	Communi-cation Address	LCD Display	Name	Setting Range	Initial Value	Shift in Opera-tion	Control Mode				
							V/F	SL	VC	SLT	VCT
21	-	Rs	Stator resistance	Dependent on motor setting	-	X	X	O	O	O	O
22	-	Lsigma	Leakage inductance	Dependent on motor setting	-	X	X	O	O	O	O
23	-	Ls	Stator inductance	Dependent on motor setting	-	X	X	O	O	O	O
24 Note4)	-	Tr	Rotor time constant	25–5000 (ms)	-	X	X	O	O	O	O
41 Note5)	0h1229	User Freq 1	User frequency 1	0–maximum frequency (Hz)	15.00	X	O	X	X	X	X
42	0h122A	User Volt 1	User voltage 1	0–100 (%)	25	X	O	X	X	X	X
43	0h122B	User Freq 2	User frequency 2	0–maximum frequency (Hz)	30.00	X	O	X	X	X	X
44	0h122C	User Volt 2	User voltage 2	0–100 (%)	50	X	O	X	X	X	X
45	0h122D	User Freq 3	User frequency 3	0–maximum frequency (Hz)	45.00	X	O	X	X	X	X
46	0h122E	User Volt 3	User voltage 3	0–100 (%)	75	X	O	X	X	X	X
47	0h122F	User Freq 4	User frequency 4	0–maximum frequency (Hz)	60.00	X	O	X	X	X	X
48	0h1230	User Volt 4	User voltage 4	0–100 (%)	100	X	O	X	X	X	X
50 Note6)	0h1232	Step Freq-1	Multi-step speed frequency 1	Starting frequency –maximum frequency(Hz)	10.00	O	O	O	O	X	X
51	0h1233	Step Freq-2	Multi-step speed frequency 2		20.00	O	O	O	O	X	X
52	0h1234	Step Freq-3	Multi-step speed frequency 3		30.00	O	O	O	O	X	X
53	0h1235	Step Freq-4	Multi-step speed frequency 4		40.00	O	O	O	O	X	X
54	0h1236	Step Freq-5	Multi-step speed frequency 5		50.00	O	O	O	O	X	X
55	0h1237	Step Freq-6	Multi-step speed frequency 6		60.00	O	O	O	O	X	X
56	0h1238	Step Freq-7	Multi-step speed frequency 7		60.00	O	O	O	O	X	X
57	0h1239	Step Freq-8	Multi-step speed frequency 8		55.00	O	O	O	O	X	X
58	0h123A	Step Freq-9	Multi-step speed frequency 9		50.00	O	O	O	O	X	X
59	0h123B	Step Freq-10	Multi-step speed frequency 10		45.00	O	O	O	O	X	X
60	0h123C	Step Freq-11	Multi-step speed frequency 11		40.00	O	O	O	O	X	X
61	0h123D	Step Freq-12	Multi-step speed frequency 12		35.00	O	O	O	O	X	X
62	0h123E	Step Freq-13	Multi-step speed frequency 13		25.00	O	O	O	O	X	X
63	0h123F	Step Freq-14	Multi-step speed frequency 14		15.00	O	O	O	O	X	X
64	0h1240	Step Freq-15	Multi-step speed frequency 15		5.00	O	O	O	O	X	X
70	0h1246	Acc Time-1	Multi-step acceleration time 1	0–600 (sec)	20.0	O	O	O	O	X	X
71	0h1247	Dec Time-1	Multi-step deceleration time 1	0–600 (sec)	20.0	O	O	O	O	X	X

BAS Group (PAR ➔ BAS)

No.	Communi-cation Address	LCD Display	Name	Setting Range	Initial Value	Shift in Opera-tion	Control Mode				
							V/F	SL	VC	SLT	VCT
72 Note7)	0h1248	Acc Time-2	Multi-step acceleration time 2	0–600 (sec)	30.0	O	O	O	O	X	X
73	0h1249	Dec Time-2	Multi-step deceleration time 2	0–600 (sec)	30.0	O	O	O	O	X	X
74	0h124A	Acc Time-3	Multi-step acceleration time 3	0–600 (sec)	40.0	O	O	O	O	X	X
75	0h124B	Dec Time-3	Multi-step deceleration time 3	0–600 (sec)	40.0	O	O	O	O	X	X
76	0h124C	Acc Time-4	Multi-step deceleration time 4	0–600 (sec)	50.0	O	O	O	O	X	X
77	0h124D	Dec Time-4	Multi-step deceleration time 4	0–600 (sec)	50.0	O	O	O	O	X	X
78	0h124E	Acc Time-5	Multi-step deceleration time 5	0–600 (sec)	60.0	O	O	O	O	X	X
79	0h124F	Dec Time-5	Multi-step deceleration time 5	0–600 (sec)	60.0	O	O	O	O	X	X
80	0h1250	Acc Time-6	Multi-step deceleration time 6	0–600 (sec)	70.0	O	O	O	O	X	X
81	0h1251	Dec Time-6	Multi-step deceleration time 6	0–600 (sec)	70.0	O	O	O	O	X	X
82	0h1252	Acc Time-7	Multi-step deceleration time 7	0–600 (sec)	80.0	O	O	O	O	X	X
83	0h1253	Dec Time-7	Multi-step deceleration time 7	0–600 (sec)	80.0	O	O	O	O	X	X

* The grey cells indicate a hidden code which is only visible when setting a code.
* The grey cells indicate a hidden code which is only visible when setting a code.

Note 4) BAS-24 is shown only when DRV-09 Control Mode is set to “Sensorless-2” or “Vector”.

Note 5) BAS-41–48 is displayed only when it is set as “User V/F” even if there is only one BAS-07 or M2-V/F Patt (M2-25).

Note 6) IN-50–64 is displayed only when it is set as “multi-step speed” (Speed –L.M.H,X) even if there is only one among multi-function input IN-65–72.

Note 7) displayed only when it is set as “multi-step Acc/Dec” (Xcel-L,M,H) even if there is only one among multi-function input IN-72–75.

8.3 Parameter Mode – Expansion Function Group (PAR➔ADV)

Expansion Function Group (PAR ➔ ADV)

No.	Communi-cation Address	LCD Display	Name	Setting Range		Initial Value	Shift in Opera-tion	Control Mode				
								V/F	SL	VC	SLT	VCT
00	-	Jump Code	Jump code	0–99		24	O	O	O	O	O	O
01	0h1301	Acc Pattern	Acceleration pattern	0	Linear	0:Linear	X	O	O	O	X	X
02	0h1302	Dec Pattern	Deceleration pattern	1	S-curve		X	O	O	O	X	X
03	0h1303	Acc S Start	S-curve acceleration start point gradient	1–100 (%)		40	X	O	O	O	X	X
04	0h1304	Acc S End	S-curve acceleration end point gradient	1–100 (%)		40	X	O	O	O	X	X
05	0h1305	Dec S Start	S-curve deceleration start point gradient	1–10 0 (%)		40	X	O	O	O	X	X
06	0h1306	Dec S End	S-curve deceleration end point gradient	1–100 (%)		40	X	O	O	O	X	X
07	0h1307	Start Mode	Start mode	0	Acc	0:Acc	X	O	O	O	X	X
				1	Dc-Start							
08	0h1308	Stop Mode	Stop mode	0	Dec	0:Dec	X	O	O	O	X	X
				1	Dc-Brake							
				2	Free-Run							
				3	-Reserved-							
				4	Power Braking							
09	0h1309	Run Prevent	Selection of prohibited rotation direction	0	None	0:None	X	O	O	O	X	X
				1	Forward Prev							
				2	Reverse Prev							
10	0h130A	Power-on Run	Start with power on	0	No	0:No	O	O	O	O	X	X
				1	Yes							
12 Note8)	0h130C	Dc-Start Time	Starting DC braking time	0–60 (sec)		0.00	X	O	O	O	X	X
13	0h130D	Dc Inj Level	DC supply	0–200 (%)		50	X	O	O	O	X	X
14 Note9)	0h130E	Dc-Block Time	Output blocking time before DC braking	0–60 (sec)		0.10	X	O	O	O	X	X
15	0h130F	Dc-Brake Time	DC braking time	0–60 (sec)		1.00	X	O	O	O	X	X
16	0h1310	Dc-Brake Level	DC braking rate	0–200 (%)		50	X	O	O	O	X	X
17	0h1311	Dc-Brake Freq	DC braking frequency	Starting frequency–60 (Hz)		5.00	X	O	O	O	X	X
20	0h1314	Acc Dwell Freq	Acceleration dwell frequency	Starting frequency –maximum frequency (Hz)		5.00	X	O	O	O	X	X
21	0h1315	Acc Dwell Time	Acceleration dwell operation time	0–60.0 (sec)		0.00	X	O	O	O	X	X
22	0h1316	Dec Dwell Freq	Deceleration dwell frequency	Starting frequency –maximum frequency (Hz)		5.00	X	O	O	O	X	X
23	0h1317	Dec Dwell Time	Deceleration dwell operation time	0–60.0 (sec)		0.00	X	O	O	O	X	X

* The grey cells indicate a hidden code which is only visible when setting a code.

Note 8) ADV-12 is displayed only when ADV-07 “Stop Mode” is set as “DC-Start”.

Note 9) ADV-14–17 is displayed only when ADV-08 “Stop Mode” is set as “DC-Brake”.

Expansion Function Group (PAR ➔ ADV)

No.	Communi-cation Address	LCD Display	Name	Setting Range		Initial Value	Shift in Opera-tion	Control Mode				
								V/F	SL	VC	SLT	VCT
24	0h1318	Freq Limit	Frequency limit	0	No	0:No	X	O	O	O	X	X
				1	Yes							
25 Note10)	0h1319	Freq Limit Lo	Frequency lower limit	0–upper limit (Hz)		0.50	O	O	O	O	X	X
26	0h131A	Freq Limit Hi	Frequency upper limit	0.5–maximum frequency (Hz)		60.00	X	O	O	O	X	X
27	0h131B	Jump Freq	Frequency jump	0	No	0:No	X	O	O	O	X	X
				1	Yes							
28 Note 11)	0h131C	Jump Lo 1	Jump frequency lower limit 1	0–jump frequency upper limit 1 (Hz)		10.00	O	O	O	O	X	X
29	0h131D	Jump Hi 1	Jump frequency upper limit 1	Jump frequency lower limit 1–maximum frequency (Hz)		15.00	O	O	O	O	X	X
30	0h131E	Jump Lo 2	Jump frequency lower limit 2	0–jump frequency upper limit 2 (Hz)		20.00	O	O	O	O	X	X
31	0h131F	Jump Hi 2	Jump frequency upper limit 2	Jump frequency lower limit 2–maximum frequency (Hz)		25.00	O	O	O	O	X	X
32	0h1320	Jump Lo 3	Jump frequency lower limit 3	0-jump frequency upper limit 3 (Hz)		30.00	O	O	O	O	X	X
33	0h1321	Jump Hi 3	Jump frequency upper limit 3	Jump frequency lower limit 3–maximum frequency (Hz)		35.00	O	O	O	O	X	X
34 Note10)	0h1322	Jog Freq Limit	Jog frequency limit	0	No	1:Yes	O	O	O	O	X	X
				1	Yes							
41 Note12)	0h1329	BR Rls Curr	Brake release current	0–180.0 (%)		50.0	O	O	O	O	X	X
42	0h132A	BR Rls Dly	Brake release delay time	0–10.00 (sec)		1.00	X	O	O	O	X	X
44	0h132C	BR Rls Fwd Fr	Brake release forward frequency	0–400 (Hz)		1.00	X	O	O	O	X	X
45	0h132D	BR Rls Rev Fr	Brake release reverse frequency	0–400 (Hz)		1.00	X	O	O	O	X	X
46	0h132E	BR Eng Dly	Brake engage delay time	0–10 (sec)		1.00	X	O	O	O	X	X
47	0h132F	BR Eng Fr	Brake engage frequency	0–400 (Hz)		2.00	X	O	O	O	X	X
50	0h1332	E-Save Mode	Energy saving operation	0	None	0:None	X	O	O	X	X	X
				1	Manual							
				2	Auto							
51 Note13)	0h1333	Energy Save	Energy saving amount	0–30 (%)		0	O	O	O	O	X	X
60	0h133C	Xcel Change Fr	Acc/dec time transition frequency	0–maximum frequency (Hz)		0.00	X	O	O	O	X	X

* The grey cells indicate a hidden code which is only visible when setting a code.

Note 10) ADV-25–26, 34 is displayed only when ADV-24 (Freq Limit) is set as “Freq Limit”.

Note 11) ADV-28–33 is displayed only when ADV-27 (Jump Freq) is set as “Yes”.

Note 12) ADV-41–47 is displayed only when a code of OUT-31–33 is set as “BR Control”.

Note 13) ADV-51 is displayed only when ADV-50 (E-Save Mode) is set as a value other than “None”.

Expansion Function Group (PAR ➔ ADV)

No.	Communi-cation Address	LCD Display	Name	Setting Range		Initial Value	Shift in Opera-tion	Control Mode				
								V/F	SL	VC	SLT	VCT
61	-	Load Spd Gain	Revolution display gain	0.1-6000.0 (%)		100.0	O	O	O	O	X	X
62	-	Load Spd Scale	Revolution display scale	0	x 1	0:x 1	O	O	O	O	X	X
				1	x 0.1							
				2	x 0.01							
				3	x 0.001							
				4	x 0.0001							
63	0h133F	Load Spd Unit	Revolution display unit	0	Rpm	0:rpm	O	O	O	O	O	O
				1	Mpm							
64	0h1340	FAN Control	Cooling fan control	0	During Run	0:During Run	O	O	O	O	X	X
				1	Always ON							
				2	Temp Control							
65	0h1341	U/D Save Mode	Up/down operation frequency save	0	No	0:No	O	O	O	O	X	X
				1	Yes							
66	0h1342	On/Off Ctrl Src	Output contact On/Off control options	0	None	0:None	X	O	O	O	O	O
				1	V1							
				2	I1							
				3	V2							
				4	I2							
67	0h1343	On-C Level	Output contact point On level	10–100 (%)		90.00	X	O	O	O	O	O
68	0h1344	Off-C Level	Output contact point Off level	-100.00–output contact point On level (%)		10.00	X	O	O	O	O	O
70	0h1346	Run En Mode	Safe operation selection	0	Always Enable	0:Always Enable	X	O	O	O	O	O
				1	DI Dependent							
71 Note14)	0h1347	Run Dis Stop	Safe operation stop method	0	Free-Run	0:Free-Run	X	O	O	O	O	O
				1	Q-Stop							
				2	Q-Stop Resume							
72	0h1348	Q-Stop Time	Safe operation deceleration time	0–600.0 (sec)		5.0	O	O	O	O	O	O
73	0h1349	RegenAvd Mode	Regeneration evasion mode	Bit	001-111	001	X	O	O	O	O	O
				0	Steady							
				1	Accelerating							
				2	Decelerating							
74	0h134A	RegenAvd Sel	Selection of regeneration evasion function for press	0	No	No	X	O	O	O	O	O
				1	Yes							
75	0h134B	RegenAvd Level	Operational voltage level of regeneration evasion motion for press	200 V: 300–400		350 V	X	O	O	O	X	X
				400 V: 600–800		700 V						
76 Note15)	0h134C	CompFreq Limit	Compensation frequency limit of regeneration for evasion for press	0–10.00 Hz		1.00 (Hz)	X	O	O	O	X	X
77	0h134D	RegenAvd Pgain	Regeneration evasion for press P gain	0–100.0 %		50.0 (%)	O	O	O	O	X	X

Expansion Function Group (PAR ➔ ADV)

No.	Communi-cation Address	LCD Display	Name	Setting Range	Initial Value	Shift in Opera-tion	Control Mode				
							V/F	SL	VC	SLT	VCT
78	0h134E	RegenAvd Igain	Regeneration evasion for press I gain	20–30000 (ms)	500 (ms)	O	O	O	O	X	X
79	0h134F	DB Turn On Lev	DB unit operating voltage	200 V : 350–400 (V) 400 V : 600–800 (V)	390 (V) 780 (V)	X	O	O	O	O	O
80	0h1350	Fire Mode Sel	Select fire mode	0 None 1 Fire Mode 2 Fire Test	0:None	X	O	O	O	X	X
81 Note16)	0h1351	Fire Mode Freq	Fire mode frequency	0-maximum frequency (Hz)	60.00	X	O	O	O	X	X
82	0h1352	Fireq Mode Dir	Fire mode operating direction	0 Forward 1 Reverse	0:Forward	X	O	O	O	X	X
83	-	Fire Mode Cnt	Fire mode counter	0-99	0	X	O	O	O	X	X
85	0h1355	U/D Mode Sel	U/D Mode	0 U/D Normal 1 U/D Step 2 U/D Step+Norm	0:U/D Normal	X	O	O	O	X	X
86 Note17)	0h1356	U/D Step Freq	U/D step frequency	0-maximum frequency [Hz]	0.00	O	O	O	O	X	X
87	0h1357	OVM Mode Sel	Over Modulation Mode	0 None 1 Yes	0:None	O	O	X	O	O	O
91	0h135B	Auxiliary OPT	AUX Power Option	0 None 1 Yes	0:None	O	O	O	O	O	O
92 Note18)	0h135C	SlipGain Mot-H	slip compensation offsetting gain H	0~200[%]	50	O	O	X	X	X	X
93	0h135D	SlipGain Gen-H	slip compensation regenerative gain H	0~200[%]	50	O	O	X	X	X	X
94	0h135E	SlipGain Mot-L	slip compensation offsetting gain L	0~200[%]	50	O	O	X	X	X	X
95	0h135F	SlipGain Gen-L	slip compensation regenerative gain L	0~200[%]	50	O	O	X	X	X	X
96	0h1360	Slip Filter	slip compensation filter	0~10000[msec]	300	O	O	X	X	X	X
97	0h1361	Slip Comp Freq	slip compensation frequency	0~60.00[Hz]	5.00	O	O	X	X	X	X
98	0h1362	Slip Gain Freq	slip compensation gain switchover frequency	0~20.00[Hz]	9.00	O	O	X	X	X	X

* The grey cells indicate a hidden code which is only visible when setting a code.

Note 14) ADV-71–72 is displayed only when ADV-70 (Run En Mode) is set as “DI Dependent”.
ADV-73 is displayed only when ADV-74 (RegenAvd Sel) is set as “Yes” .

Note15) ADV-76–78 is displayed only when ADV-75 (RegenAvd Sel) is set as “Yes”.

Note16) ADV-81–83 displayed only when ADV-80 (Fire Mode Sel) is set as “Fire Mode” or “Fire Test”.

Note17) ADV-86 is displayed when ADV-85 (U/D Mode Sel)is not set to “U/D Normal”.

Note18) ADV-92–98 is displayed only when DRV-09 (Control Mode) is set as “Slip Compen”

8.4 Parameter Mode – Control Function Group (➔CON)

Control Function Group (PAR ➔ CON)

No.	Communi-cation Address	LCD Display	Name	Setting Range		Initial Value	Shift in Opera-tion	Control Mode				
								V/F	SL	VC	SLT	VCT
00	-	Jump Code	Jump code	0-99		51	O	O	O	O	O	O
04	0h1404	Carrier Freq	Carrier frequency	Below 22 kW	0.7–15 (kHz)	5.0	O	O	O	O	O	O
				30-45 kW	0.7–10 (kHz)	5.0						
				55-75 kW	0.7–7 (kHz)	5.0						
				90-110 kW	0.7–6 (kHz)	3.0						
				132-160 kW	0.7–5 (kHz)	3.0						
				185-220 kW	0.7–3 (kHz)	2.0						
				280-375 kW	0.7–2 (kHz)	2.0						
05	0h1405	PWM Mode	Switching mode	0	Normal PWM	0:Normal PWM	X	O	O	O	O	O
				1	Low leakage PWM							
09	0h1409	PreExTime	Initial excitation time	0–60 (sec)		1.00	X	X	X	O	O	O
10	0h140A	Flux Force	Initial excitation power supply	100–500 (%)		100.0	X	X	X	O	O	O
11	0h140B	Hold Time	Continued operation duration	0–60 (sec)		Dependent on control mode	X	X	X	O	X	X
12	0h140C	ASR P Gain 1	Speed controller proportional gain 1	10–500 (%)		50.0	O	X	X	O	X	X
13	0h140D	ASR I Gain 1	Speed controller integral gain 1	10–9999 (msec)		300	O	X	X	O	X	X
15	0h140F	ASR P Gain 2	Speed controller proportional gain 2	10–500 (%)		50.0	O	X	X	O	X	X
16	0h1410	ASR I Gain 2	Speed controller integral gain 2	10–9999 (ms)		300	O	X	X	O	X	X
18	0h1412	Gain SW Freq	Gain exchange frequency	0–120 (Hz)		0.00	X	X	X	O	X	X
19	0h1413	Gain Sw Delay	Gain exchange time	0–100 (sec)		0.10	X	X	X	O	X	X
20	0h1414	SL2 G View Sel	Sensorless 2nd gain display setting	0	No	0:No	O	X	X	X	X	X
				1	Yes							
21	0h1415	ASR-SL P Gain1	Sensorless speed controller proportional gain1	0–5000 (%)		Dependent on motor capacity	O	X	O	X	X	X
22	0h1416	ASR-SL I Gain1	Sensorless speed controller integral gain 1	10–9999 (ms)		Dependent on motor capacity	O	X	O	X	X	X
23 Note17)	0h1417	ASR-SL P Gain2	Senseless speed controller proportional gain 2	1.0–1000.0 (%)		Dependent on motor capacity	O	X	X	X	X	X

Control Function Group (PAR ➔ CON)

No.	Communi-cation Address	LCD Display	Name	Setting Range	Initial Value	Shift in Opera-tion	Control Mode				
							V/F	SL	VC	SLT	VCT
24	0h1418	ASR-SL I Gain2	Sensorless2 speed controller integral gain 2	1.0–1000.0 (%)	Dependent on motor capacity	O	X	X	X	X	X
26	0h141A	Observer Gain1	Sensorless2 measurer gain 1	0–30000	10500	O	X	X	X	X	X
27	0h141B	Observer Gain2	Sensorless2 measurer gain 2	1–1000 (%)	100.0	O	X	X	X	X	X
28	0h141C	Observer Gain3	Sensorless2 measurer gain 3	0–30000	13000	O	X	X	X	X	X
29	0h141D	S-Est P Gain1	Sensorless2 speed estimator proportional gain 1	0–30000	Dependent on motor capacity	O	X	X	X	X	X
30	0h141E	S-Est I Gain1	Sensorless2 speed estimator integral gain 1	0–30000	Dependent on motor capacity	O	X	X	X	X	X

* The grey cells indicate a hidden code which is only visible when setting a code.

Note 17) CON-23–28, 31–32 are displayed only when DRV-09 (Control Mode) is “Sensorless2” and CON-20 (SL2 G View Sel) is set as “Yes”.

Control Function Group (PAR ➔ CON)

No.	Communi-cation Address	LCD Display	Name	Setting Range	Initial Value	Shift in Opera-tion	Control Mode				
							V/F	SL	VC	SLT	VCT
31	0h141F	S-Est P Gain2	Sensorless2 speed estimator proportional gain 2	1.0–1000.0 (%)	Dependent on motor capacity	O	X	X	X	X	X
32	0h1420	S-Est I Gain2	Sensorless2 speed estimator integral gain 2	1.0–1000.0 (%)	Dependent on motor capacity	O	X	X	X	X	X
34	0h1422	SL2 OVM Perc	Sensorless2 overvoltage modulation range adjustment	100–180 (%)	120	X	X	O	X	X	X
35	0h1423	SL2 L-ExcitLmt	Magnetic flux current minimum ratio	3~100[%]	10	O	X	X	X	O	X
45 Note18)	0h142D	PG P Gain	PG operation proportional gain	0–9999	3000	O	O	X	X	X	X
46	0h142E	PG I Gain	PG operation integral gain	0–9999	50	O	O	X	X	X	X
47	0h142F	PG Slip Max%	PG operation maximum slip	0–200	100	X	O	X	X	X	X
48	0h1430	ACR P Gain	Current controller P gain	0–10000	1200	O	X	O	O	O	O
49	0h1431	ACR I Gain	Current controller I gain	0–10000	120	O	X	O	O	O	O
51	0h1433	ASR Ref LPF	Speed controller reference filter	0–20000 (ms)	0	X	X	O	O	X	X
52	0h1434	Torque Out LPF	Torque controller output filter	0–2000 (ms)	0	X	X	X	X	O	O
53	0h1435	Torque Lmt Src	Torque limit setting options	0 Keypad-1 1 Keypad-2 2 V1 3 I1 4 V2 5 I2 6 Int 485 7 Encoder 8 FieldBus 9 PLC 10 Synchro 11 Binary Type	0:Keypad-1	X	X	X	X	O	O
54 Note19)	0h1436	FWD +Trq Lmt	Forward offsetting torque limit	0–200 (%)	180.0	O	X	X	X	O	O
55	0h1437	FWD –Trq Lmt	Forward offsetting torque limit	0–200 (%)	180.0	O	X	X	X	O	O
56	0h1438	REV +Trq Lmt	Reverse regenerative torque limit	0–200 (%)	180.0	O	X	X	X	O	O
57	0h1439	REV –Trq Lmt	Reverse regenerative torque limit	0–200 (%)	180.0	O	X	X	X	O	O

* The grey cells indicate a hidden code which is only visible when setting a code.

Note 18) CON-45–47 are displayed when the Encoder module is installedand Control mode is set as “V/F PG”.

Note 19) CON-54–57 are displayed only when DRV-09 (Control Mode) is set as “Sensorless-1, 2” or “Vector”. In addition, the initial value of the torque limit is changed to 150% when the ADV-74 RegenAvd Level function is set.

Control Function Group (PAR ➔ CON)

No.	Communi-cation Address	LCD Display	Name	Setting Range	Initial Value	Shift in Opera-tion	Control Mode				
							V/F	SL	VC	SLT	VCT
58	0h143A	Trq Bias Src	Torque bias setting options	0 Keypad-1 1 Keypad-2 2 V1 3 I1 4 V2 5 I2 6 Int 485 7 FieldBus 8 PLC	0:Keypad-1	X	X	X	O	X	X
59	0h143B	Torque Bias	Torque bias	-120–120 (%)	0.0	O	X	X	O	X	X
60	0h143C	Torque Bias FF	Torque bias compensation	0–100 (%)	0.0	O	X	X	O	X	X
62	0h143E	Speed Lmt Src	Speed limit setting options	0 Keypad-1 1 Keypad-2 2 V1 3 I1 4 V2 5 I2 6 Int 485 7 FieldBus 8 PLC	0:Keypad-1	O	X	X	X	X	O
63	0h143F	FWD Speed Lmt	Forward speed limit	0–maximum frequency (Hz)	60.00	O	X	X	X	X	O
64	0h1440	REV Speed Lmt	Reverse speed limit	0–maximum frequency (Hz)	60.00	O	X	X	X	X	O
65	0h1441	Speed Lmt Gain	Speed limit operation gain	100–5000 (%)	500	O	X	X	X	X	O
66	0h1442	Droop Perc	Droop operation amount	0–100 (%)	0.0	O	X	X	X	X	O
67 Note20)	0h1443	Droop St Trq	Droop start torque	0–100 (%)	100.0	O	X	X	X	X	O
68	0h1444	SPD/TRQAcc T	Torque mode →speed mode exchange acceleration time	0–600 (sec)	20.0	O	X	X	X	X	O
69	0h1445	SPD/TRQAcc T	Torque mode →speed mode exchange deceleration time	0–600 (sec)	30.0	O	X	X	X	X	O

* The grey cells indicate a hidden code which is only visible when setting a code.

Note 20) CON-67 is displayed only when the Encoder option module is installed.

Control Function Group (PAR ➔ CON)

No.	Communi-cation Address	LCD Display	Name	Setting Range		Initial Value		Shift in Opera-tion	Control Mode V/F	SL	VC	SLT	VCT
70	0h1446	SS Mode	Speed search mode selection	0	Flying Start - 1	0		X	O	O	O	X	X
				1	Flying Start - 2								
71	0h1447	Speed Search	Speed search operation selection	Bit	0000-1111	0000		X	O	O	O	X	X
				1	Speed search selection on acceleration								
				2	Restart after trips								
				3	Restart after instantaneous interruption								
				4	Start immediately after power On								
72 Note21)	0h1448	SS Sup-Current	Speed search standard current	80–200 (%)		Below 75 kW	150	O	O	O	O	X	X
						Above 90 kW	100						
73	0h1449	SS P-Gain	Speed search proportional gain	0–9999		100		O	O	O	O	X	X
74	0h144A	SS I-Gain	Speed search integral gain	0–9999		200		O	O	O	O	X	X
75	0h144B	SS Block Time	Output block time before speed search	0–60 (sec)		1.0		X	O	O	O	X	X
77	0h144D	KEB Select	Energy buffering selection	0	None	0:None		X	O	O	O	X	X
				1	KEB-1								
				2	KEB-2								
78 Note21)	0h144E	KEB Start Lev	Energy buffering start level	110–200 (%)		130.0		X	O	O	O	X	X
79	0h144F	KEB Stop Lev	Energy buffering stop level	130–210 (%)		135.0		X	O	O	O	X	X
80	0h1450	KEB Gain	Energy buffering gain	1–2000		1000		O	O	O	O	X	X
82 Note22)	0h1452	ZSD Frequency	Permanent detection frequency	0–10 (Hz)		2.00		O	X	X	O	X	O
83	0h1453	ZSD Band	Permanent detection frequency band	0–2 (Hz)		1.00		O	X	X	O	X	O
86 Note23)	0h1456	KEB P Gain	Energy buffering P gain	0–20000		1500		O	O	O	O	X	X
87	0h1457	KEB I Gain	Energy buffering I gain	1–20000		500		O	O	O	O	X	X
88	0h1458	KEB Slip Gain	Energy buffering slip gain	0–2000.0 (%)		30.0		O	O	O	O	X	X
89	0h1459	KEB Acc Time	Energy buffering acceleration time	0–600 (sec)		10.0		O	O	O	O	X	X
90	0h145A	New AHR Sel	Select function for preventing current hunting	0	No	0:No		O	O	X	X	X	X
				1	Yes								

Control Function Group (PAR ➔ CON)

No.	Communi-cation Address	LCD Display	Name	Setting Range	Initial Value	Shift in Opera-tion	Control Mode				
							V/F	SL	VC	SLT	VCT
91	0h145B	AHR P-Gain	Gain from current hunting prevention	0-32767	1000	X	O	X	X	X	X

* The grey cells indicate a hidden code which is only visible when setting a code.

Note 21) CON-72–75 are displayed only when CON-71,77 is set as a bit or other than “None”.

Note 22) CON-82–83 are displayed only when DRV-09 (Control Mode) is set as “Vector”.

Note 23) CON-78–79,86-89 are displayed only when CON-77 (KEB Select) is set as “KEB-1” or “KEB-2”

Note 24) CON-91 is displayed only when CON-90 (New AHR Sel) is set as “Yes”.

8.5 Parameter Mode – Input Terminal Block Function Group (➔IN)

Input Terminal Block Function Group (PAR ➔ IN)

No.	Communi-cation Address	LCD Display	Name	Setting Range	Initial Value	Shift in Opera-tion	Control Mode				
							V/F	SL	VC	SLT	VCT
00	-	Jump Code	Jump code	0-99	65	O	O	O	O	O	O
01	0h1501	Freq at 100%	Frequency at maximum analog input	Start frequency-maximum frequency (Hz)	60.00	O	O	O	O	X	X
02	0h1502	Torque at 100%	Torque at maximum analog input	0–200 (%)	100.0	O	X	X	O	O	O
05	0h1505	V1 Monitor(V)	V1 input voltage display	0–10 (V)	0.00	O	O	O	O	O	O
06	0h1506	V1 Polarity	V1 input polarity selection	0 Unipolar 1 Bipolar	0: Unipolar	O	O	O	O	O	
07	0h1507	V1 Filter	V1 input filter time constant	0–10000 (ms)	10	O	O	O	O	O	O
08	0h1508	V1 Volt x1	V1 minimum input voltage	0–10 (V)	0.00	O	O	O	O	O	O
09	0h1509	V1 Perc y1	V1 minimum output voltage (%)	0–100 (%)	0.00	O	O	O	O	O	O
10	0h150A	V1 Volt x2	V1 maximum input voltage	0–10 (V)	10.00	O	O	O	O	O	O
11	0h150B	V1 Perc y2	V1 maximum output voltage (%)	0–100 (%)	100.00	O	O	O	O	O	O
12 Note24)	0h150C	V1 (–)Volt x1’	V1 (–) minimum input voltage	-10–0 (V)	0.00	O	O	O	O	O	O
13	0h150D	V1(–)Perc y1’	V1 (–) minimum output voltage (%)	-100–0 (%)	0.00	O	O	O	O	O	O
14	0h150E	V1(–)Volt x2’	V1 (–) maximum input voltage	-10–0 (V)	-10.00	O	O	O	O	O	O
15	0h150F	V1(–)Perc y2’	V1 (–) maximum output voltage (%)	-100–0 (%)	-100.00	O	O	O	O	O	O
16	0h1510	V1 Inverting	Rotation direction change	0 No 1 Yes	0: No	O	O	O	O	O	O
17	0h1511	V1 Quantizing	V1 quantization change	0.04–10 (%)	0.04	O	O	O	O	O	O
20	0h1514	I1 Monitor(mA)	I1 input display	0–20 (mA)	0.00	O	O	O	O	O	O
22	0h1516	I1 Filter	I1 input filter time constant	0–10000 (ms)	10	O	O	O	O	O	O
23	0h1517	I1 Curr x1	I1 minimum input current	0–20 (mA)	4.00	O	O	O	O	O	O
24	0h1518	I1 Perc y1	Output at I1 minimum current (%)	0–100 (%)	0.00	O	O	O	O	O	O
25	0h1519	I1 Curr x2	I1 maximum input current	4-20 (mA)	20.00	O	O	O	O	O	O
26	0h151A	I1 Perc y2	Output at I1 maximum current	0-100 (%)	100.00	O	O	O	O	O	O
31	0h151F	I1 Inverting	Rotation direction change	0 No 1 Yes	0: No	O	O	O	O	O	O
32	0h1520	I1 Quantizing	I1 quantization level	0.04–10 (%)	0.04	O	O	O	O	O	O

Note 24) IN-12–15 codes are displayed only when IN-06 (V1 Polarity) is set as “Bipolar”.

Input Terminal Block Function Group (PAR ➔ IN)

No.	Communi-cation Address	LCD Display	Name	Setting Range	Initial Value	Shift in Opera-tion	Page	Control Mode				
								V/F	SL	VC	SLT	VCT
35 Note 25)	0h1523	V2 Monitor(V)	V2 input display	0–10 (V)	0.00	O	124	O	O	O	O	O
36	0h1524	V2 Polarity	V1 input polarity selection	0 Unipolar 1 Bipolar	1: Bipolar	O	124	O	O	O	O	O
37	0h1525	V2 Filter	V2 input filter time constant	0–10000 (ms)	10	O	124	O	O	O	O	O
38	0h1526	V2 Volt x1	V2 minimum input voltage	0–10 (V)	0.00	O	124	O	O	O	O	O
39	0h1527	V2 Perc y1	Output at V2 minimum voltage (%)	0–100 (%)	0.00	O	124	O	O	O	O	O
40	0h1528	V2 Volt x2	V2 maximum input voltage	0–10 (V)	10.00	O	124	O	O	O	O	O
41	0h1529	V2 Perc y2	Output at V2 maximum voltage (%)	0–100 (%)	100.00	O	124	O	O	O	O	O
42	0h152A	V2 –Volt x1’	V2 –minimum input voltage	-10–0 (V)	0.00	O	124	O	O	O	O	O
43	0h152B	V2–Perc y1’	Output at V2–minimum voltage (%)	-100–0 (%)	0.00	O	124	O	O	O	O	O
44	0h152C	V2 –Volt x2’	V2 –maximum input voltage	-10–0 (V)	-10.00	O	124	O	O	O	O	O
45	0h152D	V2 –Perc y2’	Output at V2–maximum voltage (%)	-100–0 (%)	-100.00	O	124	O	O	O	O	O
46	0h152E	V2 Inverting	Rotation direction change	0 No 1 Yes	0:No	O	124	O	O	O	O	O
47	0h152F	V2 Quantizing	V2 quantization level	0.04–10 (%)	0.04	O	124	O	O	O	O	O
50	0h1532	I2 Monitor(mA)	I2 input display	0–20 (mA)	0.00	O	125	O	O	O	O	O
52	0h1534	I2 Filter	I2 input filter time constant	0–10000 (ms)	15	O	125	O	O	O	O	O
53	0h1535	I2 Curr x1	I2 minimum input current	0–20 (mA)	4.00	O	125	O	O	O	O	O
54	0h1536	I2 Perc y1	Output at I2 minimum current (%)	0–100 (%)	0.00	O	125	O	O	O	O	O
55	0h1537	I2 Curr x2	I2 maximum input current	0–20 (mA)	20.00	O	125	O	O	O	O	O
56	0h1538	I2 Perc y2	Output at I2 maximum current (%)	0–100 (%)	100.00	O	125	O	O	O	O	O
61	0h153D	I2 Inverting	Rotation direction change	0 No 1 Yes	0:No	O	125	O	O	O	O	O
62	0h153F	I2 Quantizing	I2 quantization level	0.04–10 (%)	0.04	O	125	O	O	O	O	O

* The grey cells indicate a hidden code which is only visible when setting a code.

Note 25) IN-35–62 codes are displayed only when the expansion IO module is installed.

Input Terminal Block Function Group (PAR ➔ IN)

No.	Communi-cation Address	LCD Display	Name	Setting Range		Initial Value	Shift in Opera-tion	Control Mode				
								V/F	SL	VC	SLT	VCT
65	0h1541	P1 Define	P1 terminal function setting	0 1	NONE FX	1:FX	X	O	O	O	O	O
66	0h1542	P2 Define	P2 terminal function setting	2	RX	2:RX	X	X	X	O	O	O
67	0h1543	P3 Define	P3 terminal function setting	3	RST	5:BX	X	O	O	O	O	O
68	0h1544	P4 Define	P4 terminal function setting	4	External Trip	3:RST	X	O	O	O	O	O
69	0h1545	P5 Define	P5 terminal function setting	5	BX	7:Sp-L	X	O	O	O	O	O
70	0h1546	P6 Define	P6 terminal function setting	6	JOG	8:Sp-M	X	O	O	O	O	O
71	0h1547	P7 Define	P7 terminal function setting	7	Speed-L	9:Sp-H	X	O	O	O	O	O
72	0h1548	P8 Define	P8 terminal function setting	8	Speed-M	6:JOG	X	O	O	O	O	O
73 Note26)	0h1549	P9 Define	P9 terminal function setting	9	Speed-H	0:NONE	X	O	O	O	O	O
74	0h154A	P10 Define	P10 terminal function setting	10	Speed-X	0:NONE	X	O	O	O	O	O
75	0h154B	P11 Define	P11 terminal function setting	11	XCEL-L	0:NONE	X					
				12	XCEL-M							
				13	RUN Enable							
				14	3-Wire							
				15	2nd Source							
				16	Exchange							
				17	Up							
				18	Down							
				19	U/D Save							
				20	U/D Clear							
				21	Analog Hold							
				22	I-Term Clear							
				23	PID Openloop							
				24	P Gain2							
				25	XCEL Stop							
				26	2nd Motor							
				27	Trv Offset Lo							
				28	Trv Offset Hi							
				29	Interlock 1							
				30	Interlock 2							
				31	Interlock 3							
				32	Interlock 4							

* The grey cells indicate a hidden code which is only visible when setting a code.

Note 26) IN73–75 codes are displayed only when the expansion IO module is installed.

Input Terminal Block Function Group (PAR ➔ IN)

No.	Communi-cation Address	LCD Display	Name	Setting Range	Initial Value	Shift in Opera-tion	Control Mode				
							V/F	SL	VC	SLT	VCT
				33 -Reserved- 34 Pre Excite 35 Speed/Torque 36 ASR Gain 2 37 ASR P/PI 38 Timer In 39 Thermal In 40 Dis Aux Ref 41 -Reserved- 42 -Reserved- 43 -Reserved- 44 -Reserved- 45 -Reserved- 46 FWD JOG 47 REV JOG 48 Trq Bias 49 XCEL-H 50 KEB Select 51 Fire Mode							
85	0h1555	DI On Delay	Multi-function input terminal On filter	0–10000 (ms)	10	O	O	O	O	O	O
86	0h1556	DI Off Delay	Multi-function input terminal Off filter	0–10000 (ms)	3	O	O	O	O	O	O
87	0h1557	DINC/NO Sel	Multi-function input contact point selection	P8 – P1 0 A contact point (NO) 1 B contact point (NC)	0000 0000	X	O	O	O	O	O
88	0h1558	RunOn Delay	Operating command delay time	0–100 (sec)	0.00	X	O	O	O	O	O
89	0h1559	InCheck Time	Sequential command delay time	1–5000 (ms)	1	X	O	O	O	O	O
90	0h155A	DI Status	Multi-function input terminal status	P8 – P1 0 Open (Off) 1 Connection (On)	0000 0000	O	O	O	O	O	O

8.6 Parameter Mode – Output Terminal Block Function Group (➔OUT)

Output Terminal Block Function Group (PAR ➔ OUT)

No.	Communication Address	LCD Display	Name	Setting Range		Initial Value	Shift in Operation	Control Mode				
								V/F	SL	VC	SLT	VCT
00	-	JumpCode	Jump code	0-99		30	O	O	O	O	O	O
01	0h1601	AO1 Mode	Analog output 1	0	Frequency	0: Frequency	O	O	O	O	O	O
				1	Current							
				2	Voltage							
				3	DC Link Volt							
				4	Torque							
				5	Watt							
				6	Idss							
				7	Iqss							
				8	Target Freq							
				9	Ramp Freq							
				10	Speed Fdb							
				11	Speed Dev							
				12	PIDRef Value							
				13	PIDFdb Value							
				14	PID Output							
				15	Constant							
02	0h1602	AO1 Gain	Analog output1 gain	-1000–1000(%)		100.0	O	O	O	O	O	O
03	0h1603	AO1 Bias	Analog output 1 bias	-100–100(%)		0.0	O	O	O	O	O	O
04	0h1604	AO1 Filter	Analog output1 filter	0–10000 (ms)		5	O	O	O	O	O	O
05	0h1605	AO1 Const %	Analog constant output 1	0–1000(%)		0.0	O	O	O	O	O	O
06	0h1606	AO1 Monitor	Analog output 1 monitor	0–1000(%)		0.0	-	O	O	O	O	O
07	0h1607	AO2 Mode	Analog output 2 item	0	Frequency	0: Frequency	O	O	O	O	O	O
				1	Current							
				2	Voltage							
				3	DC Link Volt							
				4	Torque							
				5	Watt							
				6	Idss							
				7	Iqss							
				8	Target Freq							
				9	Ramp Freq							
				10	Speed Fdb							
				11	Speed Dev							
				12	PIDRef Value							
				13	PIDFbk Value							
				14	PID Output							
				15	Constant							

Output Terminal Block Function Group (PAR ➔ OUT)

No.	Communication Address	LCD Display	Name	Setting Range	Initial Value	Shift in Operation	Control Mode				
							V/F	SL	VC	SLT	VCT
08	0h1608	AO2 Gain	Analog output 2 gain	-1000–1000 (%)	80.0	O	O	O	O	O	O
09	0h1609	AO2 Bias	Analog output 2 bias	-100–100 (%)	20.0	O	O	O	O	O	O
10	0h160A	AO2 Filter	Analog output 2 filter	0–10000 (ms)	5	O	O	O	O	O	O
11	0h160B	AO2 Const %	Analog constant output 2	0–100 (%)	0.0	O	O	O	O	O	O
12	0h160C	AO2 Monitor	Analog output 2 monitor	0–1000 (%)	0.0	O	O	O	O	O	O
14 Note27)	0h160E	AO3 Mode	Analog output 3 item	0 Frequency 1 Current 2 Voltage 3 DC Link Volt 4 Torque 5 Watt 6 Idss 7 Iqss 8 Target Freq 9 Ramp Freq 10 Speed Fdb 11 Speed Dev 12 PID Ref Value 13 PID Fbk Value 14 PID Output 15 Constant	0: Frequency	O	O	O	O	O	O
15	0h160F	AO3 Gain	Analog output 3 gain	-1000–1000 (%)	100.0	O	O	O	O	O	O
16	0h1610	AO3 Bias	Analog output 3 bias	-100–100 (%)	0.0	O	O	O	O	O	O
17	0h1611	AO3 Filter	Analog output 3 filter	0–10000 (ms)	5	O	O	O	O	O	O
18	-	AO3 Const %	Analog constant output 3	0–100 (%)	0.0	O	O	O	O	O	O
19	0h1613	AO3 Monitor	Analog output 3 monitor	-1000–1000 (%)	0.0	O	O	O	O	O	O
20	0h1614	AO4 Mode	Analog output 4 item	0 Frequency 1 Current 2 Voltage 3 DC Link Volt 4 Torque 5 Watt 6 Idss 7 Iqss 8 Target Freq 9 Ramp Freq 10 Speed Fdb 11 Speed Dev 12 PID Ref Value 13 PID Fbk Value 14 PID Output 15 Constant	0: Frequency		O	O	O	O	O

Output Terminal Block Function Group (PAR ➔ OUT)

No.	Communi-cation Address	LCD Display	Name	Setting Range		Initial Value	Shift in Opera-tion	Control Mode				
								V/F	SL	VC	SLT	VCT
21	0h1615	AO4 Gain	Analog output 4 gain	-1000–1000 (%)		80.0	-	O	O	O	O	O
22	0h1616	AO4 Bias	Analog output 4 bias	-100–100 (%)		20.0	O	O	O	O	O	O
23	0h1617	AO4 Filter	Analog output 4 filter	0–10000 (ms)		5	O	O	O	O	O	O
24	-	AO4 Const %	Analog constant output 4	0–100 (%)		0.0	O	O	O	O	O	O
25	0h1619	AO4 Monitor	Analog output 4 monitor	0–1000 (%)		0.0	O	O	O	O	O	O
30	0h161E	Trip Out Mode	Failure output item	Bit	000 - 111	010	O	O	O	O	O	O
				1	Low voltage							
				2	Failure other than low voltage							
				3	Final failure of automatic restart							
31	0h161F	Relay 1	Multi-function relay 1	0	NONE	29:Trip	O	O	O	O	O	O
32	0h1620	Relay 2	Multi-function relay 2	1	FDT-1	14:Run	O	O	O	O	O	O
33	0h1621	Q1 Define	Multi-function output 1	2	FDT-2	1:FDT-1	O	O	O	O	O	O
34 Note28)	0h1622	Relay 3	Multi-function relay 3	3	FDT-3	2:FDT-2	O	O	O	O	O	O
35	0h1623	Relay 4	Multi-function relay 4	4	FDT-4	3:FDT-3	O	O	O	O	O	O
36	0h1624	Relay 5	Multi-function relay 5	5	Over Load	4:FDT-4	O	O	O	O	O	O
				6	IOL							
				7	Under Load							
				8	Fan Warning							
				9	Stall							
				10	Over Voltage							
				11	Low Voltage							
				12	Over Heat							
				13	Lost Command							
				14	Run							
				15	Stop							
				16	Steady							
				17	Inverter Line							
				18	Comm Line							
				19	Speed Search							
				20	-Reserved-							
				21	-Reserved-							
				22	Ready							
				23	Trv Acc							
				24	Trv Dec							
				25	MMC							
				26	Zspd Dect							
				27	Torque Dect							
				28	Timer Out							

Note 27) OUT 14-25 codes are displayed only when the expansion IO module is installed.

Note 28) OUT 34-36 codes are displayed only when the expansion IO module is installed.

Output Terminal Block Function Group (PAR ➔ OUT)

No.	Communi-cation Address	LCD Display	Name	Setting Range	Initial Value	Shift in Opera-tion	Control Mode				
							V/F	SL	VC	SLT	VCT
				29 Trip 30 Lost Keypad 31 DB Warn %ED 32 ENC Tune 33 ENC Dir 34 On/Off Control 35 BR Control 36 KEB Operating 37 Fire Mode 38 Run2							
41	0h1629	DO Status	Multi-function output monitoring	-	000	X	-	-	-	-	-
50	0h1632	DO On Delay	Multi-function output On delay	0–100 (sec)	0.00	O	O	O	O	O	O
51	0h1633	DO Off Delay	Multi-function output Off delay	0–100 (sec)	0.00	O	O	O	O	O	O
52	0h1634	DO NC/NO Sel	Multi-function output contact point selection	Q1,Relay2,Relay1 0 A contact point (NO) 1 B contact point (NC)	000	X	O	O	O	O	O
53	0h1635	TripOut OnDly	Failure output On delay	0–100 (sec)	0.00	O	O	O	O	O	O
54	0h1636	TripOut OffDly	Failure output Off delay	0–100.00 (sec)	0.00	O	O	O	O	O	O
55	0h1637	TimerOn Delay	Timer On delay	0–100.00 (sec)	0.00	O	O	O	O	O	O
56	0h1638	TimerOff Delay	Timer Off delay	0–100.00 (sec)	0.00	O	O	O	O	O	O
57	0h1639	FDT Frequency	Detected frequency	0–maximum frequency (Hz)	30.00	O	O	O	O	O	O
58	0h163A	FDT Band	Detected frequency width	0–maximum frequency (Hz)	10.00	O	O	O	O	O	O
59	0h163B	TD Level	Detected torque amount	0–150 (%)	100	O	X	X	O	X	O
60	0h163C	TD Band	Detected torque width	0–10 (%)	5.0	O	X	X	O	X	O

* The grey cells indicate a hidden code which is only visible when setting a code.

8.7 Parameter Mode – Communication Function Group (➔COM)

Communication Function Group (PAR ➔ COM)

No.	Communication Address	LCD Display	Name	Setting Range		Initial Value	Shift in Operation	Control Mode				
								V/F	SL	VC	SLT	VCT
00	-	Jump Code	Jump code	0–99		20	O	O	O	O	O	O
01	0h1701	Int485 St ID	Built-in communication inverter ID	1–250		1	O	O	O	O	O	O
02	0h1702	Int485 Proto	Built-in communication protocol	0	ModBus RTU	0: ModBus RTU	O	O	O	O	O	O
				1	--Reserved --							
				2	Serial Debug							
03	0h1703	Int485 BaudR	Built-in communication speed	0	1200 bps	3: 9600 bps	O	O	O	O	O	O
				1	2400 bps							
				2	4800 bps							
				3	9600 bps							
				4	19200 bps							
				5	38400 bps							
04	0h1704	Int485 Mode	Built-in communication frame setting	0	D8/PN/S1	0: D8/PN/S1	-	O	O	O	O	O
				1	D8/PN/S2							
				2	D8/PE/S1							
				3	D8/PO/S1							
05	0h1705	Resp Delay	Transmission delay after reception	0–1000 (ms)		5 ms	O	O	O	O	O	O
06 Note29-1)	0h1706	FBus S/W Ver	Communication option S/W version	-		1.00	O	O	O	O	O	O
07	0h1707	FBus ID	Communication option inverter ID	0–255		1	O	O	O	O	O	O
08	0h1708	FBUS BaudRate	FBus communication speed	-		12 Mbps		O	O	O	O	O
09	0h1709	FieldBus LED	Communication option LED status	-		-	O	O	O	O	O	O
30	0h171E	ParaStatus Num	Number of output parameters	0–8		3	O	O	O	O	O	O
31	0h171F	Para Stauts-1	Output address 1	0000-FFFF Hex		000A	O	O	O	O	O	O
32	0h1720	Para Stauts-2	Output address 2	0000-FFFF Hex		000E	O	O	O	O	O	O
33	0h1721	Para Stauts-3	Output address 3	0000-FFFF Hex		000F	O	O	O	O	O	O
34	0h1722	Para Stauts-4	Output address 4	0000-FFFF Hex		0000	O	O	O	O	O	O
35	0h1723	Para Stauts-5	Output address 5	0000-FFFF Hex		0000	O	O	O	O	O	O
36	0h1724	Para Stauts-6	Output address 6	0000-FFFF Hex		0000	O	O	O	O	O	O
37	0h1725	Para Stauts-7	Output address 7	0000-FFFF Hex		0000	O	O	O	O	O	O
38	0h1726	Para Stauts-8	Output address 8	0000-FFFF Hex		0000	O	O	O	O	O	O

* The grey cells indicate a hidden code which is only visible when setting a code.

Note 29-1) COM 06–17 codes are displayed only when the communication module is installed.

Refer to the Options manual for options.

Communication Function Group (PAR ➔ COM)

No.	Communi-cation Address	LCD Display	Name	Setting Range		Initial Value	Shift in Opera-tion	Control Mode				
								V/F	SL	VC	SLT	VCT
50	0h1732	Para Ctrl Num	Number of input parameters	0–8		2	O	O	O	O	O	O
51	0h1733	Para Control-1	Input address 1	0000-FFFF Hex		0005	X	O	O	O	O	O
52	0h1734	Para Control-2	Input address 2	0000-FFFF Hex		0006	X	O	O	O	O	O
53	0h1735	Para Control-3	Input address 3	0000-FFFF Hex		0000	X	O	O	O	O	O
54	0h1736	Para Control-4	Input address 4	0000-FFFF Hex		0000	X	O	O	O	O	O
55	0h1737	Para Control-5	Input address 5	0000-FFFF Hex		0000	X	O	O	O	O	O
56	0h1738	Para Control-6	Input address 6	0000-FFFF Hex		0000	X	O	O	O	O	O
57	0h1739	Para Control-7	Input address 7	0000-FFFF Hex		0000	X	O	O	O	O	O
58	0h173A	Para Control-8	Input address 8	0000-FFFF Hex		0000	X	O	O	O	O	O
68	0h1744	FBus Swap Sel	Profibus swap	0	No	0:No	X	O	O	O	O	O
				1	Yes							
70	0h1746	Virtual DI 1	Communication multi-function input 1	0	None	0:None	O	O	O	O	O	O
71	0h1747	Virtual DI 2	Communication multi-function input 2	1	FX	0:None	O	O	O	O	O	O
72	0h1748	Virtual DI 3	Communication multi-function input 3	2	RX	0:None	O	O	O	O	O	O
73	0h1749	Virtual DI 4	Communication multi-function input 4	3	RST	0:None	O	O	O	O	O	O
74	0h174A	Virtual DI 5	Communication multi-function input 5	4	External Trip	0:None	O	O	O	O	O	O
75	0h174B	Virtual DI 6	Communication multi-function input 6	5	BX	0:None	O	O	O	O	O	O
76	0h174C	Virtual DI 7	Communication multi-function input 7	6	JOG	0:None	O	O	O	O	O	O
77	0h174D	Virtual DI 8	Communication multi-function input 8	7	Speed-L	0:None	O	O	O	O	O	O
78	0h174E	Virtual DI 9	Communication multi-function input 9	8	Speed-M	0:None	O	O	O	O	O	O
79	0h174F	Virtual DI 10	Communication multi-function input 10	9	Speed-H	0:None	O	O	O	O	O	O
80	0h1750	Virtual DI 11	Communication multi-function input 11	10	Speed-X	0:None	O	O	O	O	O	O
81	0h1751	Virtual DI 12	Communication multi-function input 12	11	XCEL-L	0:None	O	O	O	O	O	O
82	0h1752	Virtual DI 13	Communication multi-function input 13	12	XCEL-M	0:None	O	O	O	O	O	O
83	0h1753	Virtual DI 14	Communication multi-function input 14	13	RUN Enable	0:None	O	O	O	O	O	O
84	0h1754	Virtual DI 15	Communication multi-function input 15	14	3-Wire	0:None	O	O	O	O	O	O
85	0h1755	Virtual DI 16	Communication multi-function input 16	15	2nd Source	0:None	O	O	O	O	O	O

Communication Function Group (PAR ➔ COM)

No.	Communi-cation Address	LCD Display	Name	Setting Range		Initial Value	Shift in Opera-tion	Control Mode V/F	SL	VC	SLT	VCT
				16	Exchange	0:None	O	O	O	O	O	O
				17/18	Up/Down							
				19	Reserved							
				20	U/D Clear							
				21	Analog Hold							
				22	I-Term Clear							
				23	PID Openloop							
				24	P Gain2							
				25	XCEL Stop							
				26	2nd Motor							
				27	Trv Offset Lo							
				28	Trv Offset Hi							
				29	Interlock 1							
				30	Interlock 2							
				31	Interlock 3							
				32	Interlock 4							
				33	Reserved							
				34	Pre Excite							
				35	Speed/Torque							
				36	ASR Gain 2							
				37	ASR P/PI							
				38	Timer In							
				39	Thermal In							
				40	Dis Aux Ref							
				41	-Reserved-							
				42	-Reserved-							
				43	-Reserved-							
				44	-Reserved-							
				45	-Reserved-							
				46	FWD JOG							
				47	REV JOG							
				48	Trq Bias							
				49	XCEL-H							
				50	KEB Select							
				51	Fire Mode							
86	0h1756	Virt DI Status	Communication multi-function input monitoring	-	-	0	X	O	O	O	O	O
90	0h175A	Comm Mon Sel	Monitor type selection	0	Int 485	0: Int 485	O	O	O	O	O	O
				1	Keypad							
91	0h175B	RcvFrame Num	Number of reception frames	-		0	-	O	O	O	O	O
92	0h175C	Err Frame Num	Number of error frames	-		0	-	O	O	O	O	O
93	0h175D	Nak Frame Num	Number of writing error frames	-		0	-	O	O	O	O	O
94 note 29-2)	0h175E	Comm Update	Communication update	0	No	0	-	O	O	O	O	O
				1	Yes							

note29-2) COM 94 is displayed when the communication option module is installed.

8.8 Parameter Mode – Applied Function Group (➔APP)

Applied Function Group (PAR → APP)

No.	Communi-cation Address	LCD Display	Name	Setting Range		Initial Value	Shift in Opera-tion	Control Mode				
								V/F	SL	VC	SLT	VCT
00	-	Jump Code	Jump code	0–99		20	O	O	O	O	O	O
01	0h1801	App Mode	Applied function selection	0	None	0: None	X	O	O	O	X	X
				1	Traverse							
				2	Proc PID							
				3	Reserved							
				4	Auto Sequence							
08 Note30)	0h1808	Trv Apmlit %	Traverse operating range	0–20 (%)		0.0	O	O	O	O	X	X
09	0h1809	Trv Scramb %	Traverse scramble magnitude	0–50 (%)		0.0	O	O	O	O	X	X
10	0h180A	Trv Acc Time	Traverse acceleration time	0.1–600.0 (sec)		2.0	O	O	O	O	X	X
11	0h180B	Trv Dec Time	Traverse deceleration time	0.1–600.0 (sec)		3.0	O	O	O	O	X	X
12	0h180C	Trv Offset Hi	Traverse offset upper limit	0–20.0 (%)		0.0	O	O	O	O	X	X
13	0h180D	Trv Offset lo	Traverse offset lower limit	0–20.0 (%)		0.0	O	O	O	O	X	X
16 Note31)	0h1810	PID Output	PID output monitor	(%)		0.00	-	O	O	O	X	X
17	0h1811	PID Ref Value	PID reference monitor	(%)		50.00	-	O	O	O	X	X
18	0h1812	PID Fdb Value	PID feedback monitor	(%)		0.00	-	O	O	O	X	X
19	0h1813	PID Ref Set	PID reference setting	-100–100 (%)		50%	O	O	O	O	X	X
20	0h1814	PID Ref Source	PID reference selection	0	Keypad	0:Key pad	X	O	O	O	X	X
				1	V1							
				2	I1							
				3	V2							
				4	I2							
				5	Int 485							
				6	Encoder							
				7	FieldBus							
				8	PLC							
				9	Synchro							
				10	Binary Type							

* The grey cells indicate a hidden code which is only visible when setting a code.

Note 30) APP 08–13 codes are displayed only when APP-01 (App Mode) is set as “Traverse”.

Note 31) APP 16–45 codes are displayed only when APP-01 (App Mode) is set as “Proc PID” or APP-01(App Mode) is set as “MMC” and Requl Bypass (APO-34) is set as “No”.

Applied Function Group (PAR ➔ APP)

No.	Communi-cation Address	LCD Display	Name	Setting Range	Initial Value	Shift in Opera-tion	Control Mode				
							V/F	SL	VC	SLT	VCT
21	0h1815	PID F/B Source	PID feedback selection	0 V1 1 I1 2 V2 3 I2 4 Int 485 5 Encoder 6 FieldBus 7 PLC 8 Synchro 9 Binary Type	0:V1	X	O	O	O	X	X
22	0h1816	PID P-Gain	PID proportional gain	0-1000 (%)	50.0	O	O	O	O	X	X
23	0h1817	PID I-Time	PID integral time	0-200.0 (sec)	10.0	O	O	O	O	X	X
24	0h1818	PID D-Time	PID differential time	0-1000 (ms)	0	O	O	O	O	X	X
25	0h1819	PID F-Gain	PID feed forward gain	0-1000.0 (%)	0.0	O	O	O	O	X	X
26	0h181A	P Gain Scale	Proportional gain scale	0-100.0 (%)	100.0	X	O	O	O	X	X
27	0h181B	PID Out LPF	PID output filter	0-10000 (ms)	0	O	O	O	O	X	X
28	0h181C	PID Mode	PID mode select	0 Process PID 1 Normal PID	0:Process PID	-	O	O	O	X	X
29	0h181D	PID Limit Hi	PID upper limit frequency	PID lower limit frequency (Hz)–300 (Hz)	60.00	O	O	O	O	X	X
30	0h181E	PID Limit Lo	PID lower limit frequency	-300–PID upper limit frequency (Hz)	-60.00	O	O	O	O	X	X
31	0h181F	PID Out Inv	PID output inverse	0 No 1 Yes	0:No	-	O	O	O	X	X
32	0h1820	PID Out Scale	PID output scale	0.1–1000 (%)	100.0	X	O	O	O	X	X
34	0h1822	Pre-PID Freq	PID control period movement frequency	0–maximum frequency (Hz)	0.00	X	O	O	O	X	X
35	0h1823	Pre-PID Exit	PID control period movement level	0–100 (%)	0.0	X	O	O	O	X	X
36	0h1824	Pre-PID Delay	PID control period movement delay time	0–9999 (sec)	600	O	O	O	O	X	X
37	0h1825	PID Sleep DT	PID sleep mode delay time	0–999.9 (sec)	60.0	O	O	O	O	X	X
38	0h1826	PID Sleep Freq	PID sleep mode frequency	0–maximum frequency (Hz)	0.00	O	O	O	O	X	X
39	0h1827	PID WakeUp Lev	PID wake up level	0–100 (%)	35	O	O	O	O	X	X
40	0h1828	PID WakeUp Mod	PID wake up mode setting	0 Below Level 1 Above Level 2 Beyond Level	0:Below Level	O	O	O	O	X	X
41	0h1829	PID Rev Run En	PID reverse operation	0 No 1 Yes	0:No	X	O	O	O	X	X
42	0h182A	PID Unit Sel	PID control period unit selection	0 % 1 Bar 2 mBar 3 Pa	0:%	O	O	O	O	X	X

Applied Function Group (PAR ➔ APP)

No.	Communi-cation Address	LCD Display	Name	Setting Range		Initial Value	Shift in Opera-tion	Control Mode				
								V/F	SL	VC	SLT	VCT
				4	KPa							
				5	Hz							
				6	rpm							
				7	V							
				8	I							
				9	kW							
				10	HP							
				11	℃							
				12	℉							
43	0h182B	PID Unit Gain	PID unit gain	0–300 (%)		100.00	O	O	O	O	X	X
44	0h182C	PID Unit Scale	PID unit scale	0	X 0.01	2:x 1	O	O	O	O	X	X
				1	X 0.1							
				2	X 1							
				3	X 0.1							
				4	X 0.01							
45	0h182D	PID P2-Gain	PID 2nd proportional gain	0–1000 (%)		100.0	X	O	O	O	X	X

Note 31) APP 16–45 codes are displayed only when APP-01 (App Mode) is set as “Proc PID” or APP-01(App Mode) is set as “MMC” and Requl Bypass (APO-34) is set as “No”.

8.9 Parameter Mode – Option Module Function Group (➔APO)

Option Module Function Group (PAR ➔ APO)

No.	Communi-cation Address	LCD Display	Name	Setting Range		Initial Value	Shift in Opera-tion	Control Mode				
								V/F	SL	VC	SLT	VCT
00	-	Jump Code	Jump code	0-99		20	O	O	O	O	O	O
01 Note37)	0h1A01	Enc Opt Mode	Encoder function item	0	None	0:None	O	O	O	O	O	O
				1	Feedback							
				2	Reference							
04	0h1A04	Enc Type Sel	Encoder type selection	0	Line Driver	0:Line Driver	X	O	O	O	O	O
				1	Totem or Com							
				2	Open Collector							
05	0h1A05	Enc Pulse Sel	Encoder pulse direction	0	(A+B)	0: (A+B)	X	O	O	O	O	O
				1	-(A+B)							
				2	A							
06	0h1A06	Enc Pulse Num	Number of encoder pulses	10–5000		1024	X	O	O	O	O	O
08	0h1A08	Enc Monitor	Feedback monitor	-		-	O	O	O	O	O	O
09	0h1A09	Pulse Monitor	Reference monitor	-		-	O	O	O	O	O	O
10	0h1A0A	Enc Filter	Encoder input filter	0–10000 (ms)		3	O	O	O	O	O	O
11	0h1A0B	Enc Pulse x1	Encoder minimum input pulse	0–100 (kHz)		0.0	O	O	X	O	X	O
12	0h1A0C	Enc Perc y1	Output at encoder minimum pulse (%)	0–100 (%)		0.00	O	O	X	O	X	O
13	0h1A0D	Enc Pulse x2	Encoder maximum input pulse	0–200 (kHz)		100	O	O	X	O	X	O
14	0h1A0E	Enc Perc y2	Encoder maximum pulse output (%)	0–100 (%)		100	O	O	X	O	X	O
20 Note38)	0h1A14	Aux Motor Run	Display of number of auxiliary motor movements	0–4		0	O	O	O	O	X	X
21	0h1A15	Starting Aux	Starting auxiliary motor selection	1–4		1	X	O	O	O	X	X
22	0h1A16	AutoOp Time	Auto change operation time	X:XX (Min)		0:00	O	O	O	O	X	X
23	0h1A17	Start Freq 1	1st auxiliary motor starting frequency	0–60 (Hz)		49.99	O	O	O	O	X	X
24	0h1A18	Start Freq 2	2nd auxiliary motor starting frequency	0–60 (Hz)		49.99	O	O	O	O	X	X
25	0h1A19	Start Freq 3	3rd auxiliary motor starting frequency	0–60 (Hz)		49.99	O	O	O	O	X	X
26	0h1A1A	Start Freq 4	4th auxiliary motor starting frequency	0–60 (Hz)		49.99	O	O	O	O	X	X

Option Module Function Group (PAR ➔ APO)

No.	Communi-cation Address	LCD Display	Name	Setting Range		Initial Value	Shift in Opera-tion	Control Mode				
								V/F	SL	VC	SLT	VCT
27	0h1A1B	Stop Freq 1	1st auxiliary motor stop frequency	0–60 (Hz)		15.00	O	O	O	O	X	X
28	0h1A1C	Stop Freq 2	2nd auxiliary motor stop frequency	0–60 (Hz)		15.00	O	O	O	O	X	X
29	0h1A1D	Stop Freq 3	3rd auxiliary motor stop frequency	0–60 (Hz)		15.00	O	O	O	O	X	X
30	0h1A1E	Stop Freq 4	4th auxiliary motor stop frequency	0–60 (Hz)		15.00	O	O	O	O	X	X
31	0h1A1F	Aux Start DT	Auxiliary motor starting delay time	0–3600.0 (sec)		60.0	O	O	O	O	X	X
32	0h1A20	Aux Stop DT	Auxiliary motor stop delay time	0–3600.0 (sec)		60.0	O	O	O	O	X	X
33	0h1A21	Num of Aux	Auxiliary motor number selection	0–4		4	X	O	O	O	X	X
34	0h1A22	Regul Bypass	Bypass selection	0	No	0:No	X	O	O	O	X	X
				1	Yes							
35	0h1A23	Auto Ch Mode	Auto change mode selection	0	None	1: Aux	X	O	O	O	X	X
				1	Aux							
				2	Main							
36	0h1A24	Auto Ch Time	Auto change time	0–99:00 (min)		72:00	O	O	O	O	X	X
38	0h1A26	Interlock	Interlock selection	0	No	0:No	O	O	O	O	X	X
				1	Yes							
39	0h1A27	Interlock DT	Interlock movement delay time	0.1–360.0 (sec)		5.0	O	O	O	O	X	X
40	0h1A28	Actual Pr Diff	Auxiliary motor movement pressure difference	0–100 (%)		2	O	O	O	O	X	X
41	0h1A29	Aux Acc Time	Main motor acceleration time when number of pumps decreases	0–600.0 (sec)		2.0	O	O	O	O	X	X
42	0h1A2A	Aux Dec Time	Main motor deceleration time when number of pumps increases	0–600.0 (sec)		2.0	O	O	O	O	X	X
58 Note39)	0h1A3A	PLC LED Status	PLC option LED status	-		-	O	O	O	O	O	O
59	0h1A3B	PLC S/W Ver	PLC option module S/W version	-		1.X	O	O	O	O	O	O
60	0h1A3C	PLC Wr Data 1	PLC write data 1	0–FFFF (Hex)		0000	O	O	O	O	O	O
61	0h1A3D	PLC Wr Data 2	PLC write data 2	0–FFFF (Hex)		0000	O	O	O	O	O	O
62	0h1A3E	PLC Wr Data 3	PLC write data 3	0–FFFF (Hex)		0000	O	O	O	O	O	O
63	0h1A3F	PLC Wr Data 4	PLC write data 4	0–FFFF (Hex)		0000	O	O	O	O	O	O

Option Module Function Group (PAR ➔ APO)

No.	Communi-cation Address	LCD Display	Name	Setting Range	Initial Value	Shift in Opera-tion	Control Mode				
							V/F	SL	VC	SLT	VCT
64	0h1A40	PLC Wr Data 5	PLC write data 5	0–FFFF (Hex)	0000	O	O	O	O	O	O
65	0h1A41	PLC Wr Data 6	PLC write data 6	0–FFFF (Hex)	0000	O	O	O	O	O	O
66	0h1A42	PLC Wr Data 7	PLC write data 7	0–FFFF (Hex)	0000	O	O	O	O	O	O
67	0h1A43	PLC Wr Data 8	PLC write data 8	0–FFFF (Hex)	0000	O	O	O	O	O	O
76	0h1A4C	PLC Rd Data 1	PLC read data 1	0–FFFF (Hex)	0000	O	O	O	O	O	O
77	0h1A4D	PLC Rd Data 2	PLC read data 2	0–FFFF (Hex)	0000	O	O	O	O	O	O
78	0h1A4E	PLC Rd Data 3	PLC read data 3	0–FFFF (Hex)	0000	O	O	O	O	O	O
79	0h1A4F	PLC Rd Data 4	PLC read data 4	0–FFFF (Hex)	0000	O	O	O	O	O	O
80	0h1A50	PLC Rd Data 5	PLC read data 5	0–FFFF (Hex)	0000	O	O	O	O	O	O
81	0h1A51	PLC Rd Data 6	PLC read data 6	0–FFFF (Hex)	0000	O	O	O	O	O	O
82	0h1A52	PLC Rd Data 7	PLC read data 7	0–FFFF (Hex)	0000	O	O	O	O	O	O
83	0h1A53	PLC Rd Data 8	PLC read data 8	0–FFFF (Hex)	0000	O	O	O	O	O	O

* The grey cells indicate a hidden code which is only visible when setting a code.

Note 37) APO-01–14 codes are displayed only when the encoder module is installed.

Note 38) APO-20–42 codes are displayed only when APP-01 (App Mode) is set as “MMC”.

Note 39) APO-58–83 codes are displayed only when the PLC option module is installed.

8.10 Parameter Mode – Protective Function Group (➔PRT)

Protective Function Group (PAR ➔ PRT)

No.	Communi-cation Address	LCD Display	Name	Setting Range		Initial Value	Shift in Opera-tion	Control Mode				
								V/F	SL	VC	SLT	VCT
00	-	Jump Code	Jump code	0–99		40	O	O	O	O	O	O
04	0h1B04	Load Duty	Load amount setting	0	Normal Duty	1:Heavy Duty	X	O	O	O	O	O
				1	Heavy Duty							
05	0h1B05	Phase Loss Chk	Input/output open-phase protection	Bit	00–11	00	X	O	O	O	O	O
				1	Output open phase							
				2	Input open phase							
06	0h1B06	IPO V Band	Input voltage range during open-phase	1–100 (V)		40	X	O	O	O	O	O
07	0h1B07	Trip Dec Time	Deceleration time at fault trip	0–600 (sec)		3.0	O	O	O	O	O	O
08	0h1B08	RST Restart	Starting selection on trip reset	0	No	0:No	O	O	O	O	O	O
				1	Yes							
09	0h1B09	Retry Number	Number of automatic restarts	0–10		0	O	O	O	O	O	O
10 Note40)	0h1B0A	Retry Delay	Automatic restart delay time	0–60.0 (sec)		1.0	O	O	O	O	O	O
11	0h1B0B	Lost KPD Mode	Keypad command loss operation mode	0	None	0:None	O	O	O	O	O	O
				1	Warning							
				2	Free-Run							
				3	Dec							
12	0h1B0C	Lost Cmd Mode	Speed command loss operation mode	0	None	0:None	O	O	O	O	O	O
				1	Free-Run							
				2	Dec							
				3	Hold Input							
				4	Hold Output							
				5	Lost Preset							
13 Note41)	0h1B0D	Lost Cmd Time	Speed command loss judgment time	0.0–120 (sec)		1.0	O	O	O	O	O	O
14	0h1B0E	Lost Preset F	Operation frequency at speed command loss	Start frequency –maximum frequency (Hz)		0.00	O	O	O	O	O	O
15	0h1B0F	AI Lost Level	Analog input loss judgment level	0	Half of x1	0:Half of x1	O	O	O	O	O	O
				1	Below x1							
17	0h1B11	OL Warn Select	Overload alarm selection	0	No	0:No	O	O	O	O	O	O
				1	Yes							
18	0h1B12	OL Warn Level	Overload alarm level	30–180 (%)		150	O	O	O	O	O	O
19	0h1B13	OL Warn Time	Overload alarm time	0–30.0 (sec)		10.0	O	O	O	O	O	O
20	0h1B14	OL Trip Select	Motion at overload trip	0	None	1:Free-Run	O	O	O	O	O	O
				1	Free-Run							
				2	Dec							

Protective Function Group (PAR ➔ PRT)

No.	Communi-cation Address	LCD Display	Name	Setting Range		Initial Value	Shift in Opera-tion	Control Mode V/F	SL	VC	SLT	VCT
21	0h1B15	OL Trip Level	Overload trip level	30–200 (%)		180	O	O	O	O	O	O
22	0h1B16	OL Trip Time	Overload trip time	0–60 (sec)		60.0	O	O	O	O	O	O
25	0h1B19	UL Warn Sel	Under load alarm selection	0	No	0:No	O	O	O	O	O	O
				1	Yes							
26	0h1B1A	UL Warn Time	Under load alarm time	0–600.0 (sec)		10.0	O	O	O	O	O	O
27	0h1B1B	UL Trip Sel	Under load trip selection	0	None	0:None	O	O	O	O	O	O
				1	Free-Run							
				2	Dec							
28	0h1B1C	UL Trip Time	Under load trip time	0–600 (sec)		30.0	O	O	O	O	O	O
29	0h1B1D	UL LF Level	Under load lower limit level	10–30 (%)		30	O	O	O	O	O	O
30	0h1B1E	UL BF Level	Under load upper limit level	10–100 (%)		30	O	O	O	O	O	O
31	0h1B1F	No Motor Trip	Operation on no motor trip	0	None	0: None	O	O	O	O	O	O
				1	Free-Run							
32 Note42)	0h1B20	No Motor Level	No motor detection current level	1–100 (%)		5	O	O	O	O	O	O
33	0h1B21	No Motor Time	No motor detection delay	0.1–10.0 (sec)		3.0	O	O	O	O	O	O
34	0h1B22	Thermal-T Sel	Operation at motor overheat detection	0	None	0:None	O	O	O	O	O	
				1	Free-Run							
				2	Dec							
35	0h1B23	Thermal In Src	Thermal sensor input	0	None	0:None	O	O	O	O	O	
				1	V1							
				2	I1							
				3	V2							
				4	I2							
36	0h1B24	Thermal-T Lev	Thermal sensor fault level	0–100 (%)		50.0	O					
37	0h1B25	Thermal-T Area	Thermal sensor fault area	0	Low	0:Low	O	O	O	O	O	
				1	High							
40	0h1B28	ETH Trip Sel	Electronic thermal fault trip prevention selection	0	None	0:None	O	O	O	O	O	
				1	Free-Run							
				2	Dec							
41	0h1B29	Motor Cooling	Motor cooling fan type	0	Self-cool	0:Self-cool	O	O	O	O	O	
				1	Forced-cool							
42	0h1B2A	ETH 1min	Electronic thermal one minute rating	120–200 (%)		150	O	O	O	O	O	O
43	0h1B2B	ETH Cont	Electronic thermal prevention continuous rating	50–200 (%)		120	O	O	O	O	O	O
45	0h1B2D	BX Mode	BX mode select	0 (sec)	Free-run	0.0 (Free-run)	O	O	O	O	X	X
				0.1–600.0 (sec)	Dec							

Protective Function Group (PAR ➔ PRT)

No.	Communi-cation Address	LCD Display	Name	Setting Range	Initial Value	Shift in Opera-tion	Control Mode				
							V/F	SL	VC	SLT	VCT
50	0h1B32	Stall Prevent	Stall prevention	Bit 00000–11111 Bit 00001 Accelerating(Mode1) Bit 10001 Accelerating(Mode2) Bit 00010 Steady speed(Mode1) Bit 10010 Steady speed(Mode2) Bit #0100 (# : 1 or 0) Decelerating Bit #1000 (# : 1 or 0) Flux Braking	00000	X	O	O	X	O	X
51	0h1B33	Stall Freq 1	Stall frequency 1	Start frequency -stall frequency 1 (Hz)	60.00	O	O	O	X	O	X
52	0h1B34	Stall Level 1	Stall level 1	30–250 (%)	180	X	O	O	X	O	X
53	0h1B35	Stall Freq 2	Stall frequency 2	Stall frequency 1 –stall frequency 2 (Hz)	60.00	O	O	O	X	O	X
54	0h1B36	Stall Level 2	Stall level 2	30–250 (%)	180	X	O	O	X	O	X
55	0h1B37	Stall Freq 3	Stall frequency 3	Stall frequency 2 –stall frequency 4 (Hz)	60.00	O	O	O	X	O	X
56	0h1B38	Stall Level 3	Stall level 3	30–250 (%)	180	X	O	O	X	O	X
57	0h1B39	Stall Freq 4	Stall frequency 4	Stall frequency 3 –maximum frequency (Hz)	60.00	O	O	O	X	O	X
58	0h1B3A	Stall Level 4	Stall level 4	30–250 (%)	180	X	O	O	X	O	X
66	0h1B42	DB Warn %ED	DB resistance warning level	0–30 (%)	0	O	O	O	O	O	O
70	0h1B46	Over SPD Freq	Overspeed decision frequency	20–130 (%)	120.0	O	X	X	O	X	O
72	0h1B48	Over SPD Time	Overspeed judgment time	0.01–10.00 (sec)	0.01	O	X	X	O	X	O
73	0h1B49	Speed Dev Trip	Speed error failure	0 No 1 Yes	0:No	O	X	X	O	X	X
74	0h1B4A	Speed Dev Band	Speed error width	2-maximum frequency (Hz)	20.00	O	X	X	O	X	X
75	0h1B4B	Speed Dev Time	Speed error judgment time	0.1–1000.0 (sec)	1.0	O	X	X	O	X	X
77	0h1B4D	Enc Wire Check	Encoder option connection check	0 No 1 Yes	0:No	O	X	X	O	X	O
78	0h1B4E	Enc Check Time	Encoder connection check time	0.1–1000.0 (sec)	1.0	O	X	X	O	X	O
79	0h1B4F	FAN Trip Mode	Cooling fan fault selection	0 Trip 1 Warning	1: Warning	O	O	O	O	O	O
80	0h1B50	Opt Trip Mode	Operation selection on optional module trip	0 None 1 Free-Run 2 Dec	1:Free-Run	O	O	O	O	O	O
81	0h1B51	LVT Delay	Low voltage trip decision delay time	0–60.0 (sec)	0.0	X	O	O	O	O	O

Protective Function Group (PAR ➔ PRT)

No.	Communi-cation Address	LCD Display	Name	Setting Range		Initial Value	Shift in Opera-tion	Control Mode V/F	SL	VC	SLT	VCT
82	0h1B52	LV2 Enable	Select 'Low Voltage2' during operation	Bit	00~11	0:No	X	O	O	O	O	O
				00	No							
				01	LV2(no saved)							
				10	No							
				11	LV2(saved)							

* The grey cells indicate a hidden code which is only visible when setting a code.

Note 40) PRT-10 codes are displayed only when PRT-09(Retry Number) is set above "0".

Note 41) PRT-13–15 codes are displayed only when PRT-12(Lost Cmd Mode) is not "None".

Note 42) PRT-32–33 codes are displayed only when PRT-31(No Motor Trip is set as "Free-Run".

8.11 Parameter Mode – 2nd Motor Function Group (➔M2)

2nd Motor Function Group (PAR ➔ M2)

No.	Communi-cation Address	LCD Display	Name	Setting Range		Initial Value		Shift in Opera-tion	Control Mode V/F	SL	VC	SLT	VCT
00	-	Jump Code	Jump code	0–99		14		O	O	O	X	O	X
04	0h1C04	M2-Acc Time	Acceleration time	0–600 (sec)		Below 75 kW	20.0	O	O	O	X	O	X
						Above 90 kW	60.0						
05	0h1C05	M2-Dec Time	Deceleration time	0–600 (sec)		Below 75 kW	30.0	O	O	O	X	O	X
						Above 90 kW	90.0						
06	0h1C06	M2-Capacity	Motor capacity	0	0.2 kW	-		X	O	O	X	O	X
				21	185 kW								
07	0h1C07	M2-Base Freq	Base frequency	30–400 (Hz)		60.00		X	O	O	X	O	X
08	0h1C08	M2-Ctrl Mode	Control mode	0	V/F	0:V/F		X	O	O	X	O	X
				1	V/F PG								
				2	Slip Compen								
				3	Sensorless-1								
				4	Sensorless-2								
10	0h1C0A	M2-Pole Num	Motor pole	2–48		Dependent on motor capacity		X	O	O	X	O	X
11	0h1C0B	M2-Rated Slip	Rated slip speed	0–3000 (rpm)				X	O	O	X	O	X
12	0h1C0C	M2-Rated Curr	Motor rated current	1.0–1000.0 (A)				X	O	O	X	O	X
13	0h1C0D	M2-Noload Curr	Motor no-load current	0.5–1000.0 (A)				X	O	O	X	O	X
14	0h1C0E	M2-Rated Volt	Motor rated voltage	180–480 (V)				X	O	O	X	O	X
15	0h1C0F	M2-Efficiency	Motor efficiency	70–100 (%)				X	O	O	X	O	X
16	0h1C10	M2-Inertia Rt	Load inertia ratio	0–8				X					
17	-	M2-Rs	Stator resistance	0–9.999 (Ω)				X					
18	-	M2-Lsigma	Leak inductance	0–99.99 (mH)				X					
19	-	M2-Ls	Stator inductance	0–999.9 (mH)				X	O	O	X	O	X
20	-	M2-Tr	Rotor time constant	25–5000 (ms)				X	O	O	X	O	X

2nd Motor Function Group (PAR ➔ M2)

No.	Communi-cation Address	LCD Display	Name	Setting Range	Initial Value	Shift in Opera-tion	Control Mode V/F	SL	VC	SLT	VCT
25	0h1C19	M2-V/F Patt	V/F pattern	0 Linear 1 Square 2 User V/F	0:Linear	X	O	O	X	O	X
26	0h1C1A	M2-Fwd Boost	Forward torque boost	0–15 (%)	Below 75 kW: 2.0 Above 90 kW: 1.0	X	O	O	X	O	X
27	0h1C1B	M2-Rev Boost	Reverse torque boost	0–15 (%)		X	O	O	X	O	X
28	0h1C1C	M2-Stall Lev	Stall prevention level	30–150 (%)	150	X	O	O	X	O	X
29	0h1C1D	M2-ETH 1min	Electronic thermal one minute rating	100–200 (%)	150	X	O	O	X	O	X
30	0h1C1E	M2-ETH Cont	Electronic thermal continuous rating	50–150 (%)	100	X	O	O	X	O	X
40	0h1C28	M2-LoadSpdGain	Revolution display gain	0.1–6000.0 (%)	100.0	O	O	O	O	O	O
41	0h1C29	M2-LoadSpdScal	Revolution display scale	0 x 1 1 x 0.1 2 x 0.01 3 x 0.001 4 x 0.0001	0:x 1	O	O	O	O	O	O
42	0h1C2A	M2-LoadSpdUnit	Revolution display unit	0 Rpm 1 Mpm	0:rpm	O	O	O	O	O	O

8.12 Trip Mode (TRP Current (or Last-x))

Trip Mode (TRP Last-x)

No.	LCD Display	Name	Setting Range	Initial Value
00	Trip Name (x)	Trip type display	-	-
01	Output Freq	Output frequency at trip	-	-
02	Output Current	Output current at trip	-	-
03	Inverter State	Acc/Dec status at trip	-	-
04	DCLink Voltage	DC voltage	-	-
05	Temperature	NTC temperature	-	-
06	DI State	Status of input terminals	-	0000 0000
07	DO State	Status of output terminals	-	000
08	Trip On Time	Trip time since power on	-	0/00/00 00:00
09	Trip Run Time	Trip time since operation start	-	0/00/00 00:00
10	Trip Delete	Delete trip history	0 No 1 Yes	0:No

8.13 Config Mode (CNF)

Config Mode (CNF)

No.	LCD Display	Name	Setting Range		Initial Value
00	Jump Code	Jump code	0-99		1
01	Language Sel	Keypad language selection	0. English		0. English
			1. Russian		
			2. Español		
			3. Polski		
			4. Turkish		
02	LCD Contrast	LCD contrast adjustment	-		-
10	Inv S/W Ver	Inverter S/W version	-		1.XX
11	KeypadS/W Ver	Keypad S/W version	-		1.XX
12	KPD Title Ver	Keypad title version	-		1.XX
20 Note43)	Anytime Para	Status display	0	Frequency	0: Frequency
21	Monitor Line-1	Monitor mode display 1	1	Speed	0: Frequency
22	Monitor Line-2	Monitor mode display 2	2	Output Current	2:Output Current
23	Monitor Line-3	Monitor mode display 3	3	Output Voltage	3:Output Voltage
			4	Output Power	
			5	WHour Counter	
			6	DCLink Voltage	
			7	DI State	
			8	DO State	
			9	V1 Monitor (V)	
			10	V1 Monitor (%)	
			11	I1 Monitor (mA)	
			12	I1 Monitor (%)	
			13	V2 Monitor (V)	
			14	V2 Monitor (%)	
			15	I2 Monitor (mA)	
			16	I2 Monitor (%)	
			17	PID Output	
			18	PID ref Value	
			19	PID Fdb Value	
			20	Torque	
			21	Torque Limit	
			22	Trq Bias Ref	
			23	Speed Limit	
			24	Load Speed	
			25	Temperature	
24	Mon Mode Init	Monitor mode initialization	0	No	0:No
			1	Yes	
30	Option-1 Type	Option slot 1 type display	0	None	0:None
31	Option-2 Type	Option slot 2 type display	1	PLC	0:None

Config Mode (CNF)

No.	LCD Display	Name	Setting Range		Initial Value
32	Option-3 Type	Option slot 3 type display	2	Profi	0:None
			3	Ext. I/O	
			4	Encoder	
40	Parameter Init	Parameter initialization	0	No	-
			1	All Grp	
			2	DRV Grp	
			3	BAS Grp	
			4	ADV Grp	
			5	CON Grp	
			6	IN Grp	
			7	OUT Grp	
			8	COM Grp	
			9	APP Grp	
			10	AUT Grp	
			11	APO Grp	
			12	PRT Grp	
			13	M2 Grp	
41	Changed Para	Display changed parameter	0	View All	0:View All
			1	View Changed	
42	Multi Key Sel	Multi-function key item	0	None	0:None
			1	JOG Key	
			2	Local/Remote	
			3	UserGrp SelKey	
43	Macro Select	Macro function item	0	None	0:None
			1	Draw App	
			2	Traverse	
44	Erase All Trip	Delete trip history	0	No	0:No
			1	Yes	
45	UserGrp AllDel	Delete user registration code	0	No	0:No
			1	Yes	
46	Parameter Read	Read parameters	0	No	0:No
			1	Yes	
47	Parameter Write	Write parameters	0	No	0:No
			1	Yes	
48	Parameter Save	Save parameters	0	No	0:No
			1	Yes	
50	View Lock Set	Hide parameter mode	0-9999		Unlocked
51	View Lock Pw	Password for hiding parameter mode	0-9999		Password
52	Key Lock Set	Lock parameter edit	0-9999		Unlocked
53	Key Lock Pw	Password for locking parameter edit	0-9999		Password
60	Add Title Del	Additional title update	0	No	0:No
			1	Yes	
61	Easy Start On	Simple parameter setting	0	No	0:No
			1	Yes	

Config Mode (CNF)

No.	LCD Display	Name	Setting Range		Initial Value
62	WHCount Reset	Power consumption initialization	0	No	0:No
			1	Yes	
70	On-time	Accumulated inverter motion time	0000DAY 00hr:00mm		-
71	Run-time	Accumulated inverter operation time	0000DAY 00hr:00mm		-
72	Time Reset	Accumulated inverter operation time initialization	0	No	0:No
			1	Yes	
74	Fan Time	Accumulated cooling fan operation time	0000DAY 00hr:00mm		-
75	Fan Time Rst	Accumulated cooling fan operation time initialization	0	No	-
			1	Yes	

Note 43) Item 7 and 8 are not in the Anytime Para item.

8.14 User/Macro Mode – Draw Operation Function Group➔MC1

U&M ➔ MC1

No.	LCD Display	Name	Setting Range	Initial Value	
00	Jump Code	Jump code	0–99	1	
01	Acc Time	Acceleration time	0–600 (sec)	Below 75 kW	20
				Above 90 kW	60
02	Dec Time	Deceleration time	0–600 (sec)	Below 75 kW	30
				Above 90 kW	90
03	Cmd Source	Command source	0–5	1:Fx/Rx-1	
04	Freq Ref Src	Frequency reference source	0–9	2:V1	
05	Control Mode	Control mode	0–5	0:V/F	
06	Aux Ref Src	Auxiliary reference source	0–4	2:I1	
07	Aux Calc Type	Auxiliary calculation type	0–7	0	
08	Aux Ref Gain	Auxiliary reference gain	-200–200 (%)	100.0	
09	V1 Polarity	V1 input polarity selection	0–1	0:Unipolar	
10	V1 Filter	V1 input filter time constant	0–10000 (ms)	10	
11	V1 Volt x1	V1 minimum input voltage	0–10 (V)	0.00	
12	V1 Perc y1	Output at V1 minimum voltage (%)	0–100 (%)	0.00	
13	V1 Volt x2	V1 maximum input voltage	0–10 (V)	10.00	
14	V1 Perc y2	Output at V1 maximum voltage (%)	0–100 (%)	100.00	
15	V1 –Volt x1’	V1 –minimum input voltage	-10–0 (V)	0.00	
16	V1 –Perc y1’	Output at V1 –minimum voltage (%)	-100–0 (%)	0.00	
17	V1 –Volt x2’	V1–maximum input voltage	-10–0 (V)	-10.00	
18	V1 –Perc y2	Output at V1 –maximum voltage (%)	-100–0 (%)	-100.00	
19	V1 Inverting	Rotation direction change	0–1	0:No	
20	I1 Monitor(mA)	I1 input amount display	0–20 (mA)	0.00	
21	I1 Polarity	I1 polarity display	0–1	0	
22	I1 Filter	I1 input filter time constant	0–10000 (ms)	10	
23	I1 Curr x1	I1 minimum input current	0–20 (mA)	4.00	
24	I1 Perc y1	Output at I1 minimum current (%)	0–100 (%)	0.00	
25	I1 Curr x2	I1 maximum input current	4–20 (mA)	20.00	
26	I1 Perc y2	Output at I1 maximum current (%)	0–100 (%)	100.00	
27	I1 Curr x1’	I1 –minimum input current	-20–0 (mA)	0.00	
28	I1 Perc y1’	Output at I1 - minimum current (%)	-100–0 (%)	0.00	
29	I1 Curr x2’	I1 – maximum input current	-20–0 (mA)	-20.00	
30	I1 Perc y2’	Output at I1 maximum current (%)	-100–0 (%)	-100.00	
31	I1 Inverting	Rotation direction change	0–1	0:No	
32	P1 Define	P1 terminal function setting	0–48	0:FX	
33	P2 Define	P2 terminal function setting	0–48	1:RX	
34	P3 Define	P3 terminal function setting	0–48	5:BX	

8.15 User/Macro mode – Traverse Operation Function Group (➔MC2)

Traverse Operation Function Group (U&M ➔ MC2)

No.	LCD Display	Name	Setting Range	Initial Value	
00	Jump Code	Jump code	0–99	1	
01	Acc Time	Acceleration time	0–600 (sec)	Below 75 kW	20
				Above 90 kW	60
02	Dec Time	Deceleration time	0–600 (sec)	Below 75 kW	30
				Above 90 kW	90
03	Cmd Source	Command source	0–5	1:Fx/Rx-1	
04	Freq Ref Src	Frequency reference source	0–9	0:Keypad-1	
05	Control Mode	Control mode	0–5	0:V/F	
06	App Mode	Applied function selection	0–4	1:Traverse	
07	Trv Apmlit %	Traverse operating range	0–20 (%)	0.0	
08	Trv Scramb %	Traverse scramble magnitude	0–50 (%)	0.0	
09	Trv Acc Time	Traverse acceleration time	0.1–600 (sec)	2.0	
10	Trv Dec Time	Traverse deceleration time	0.1–600 (sec)	2.0	
11	Trv Offset Hi	Traverse offset upper limit	0–20 (%)	0.0	
12	Trv Offset lo	Traverse offset lower limit	0–20 (%)	0.0	
13	P1 Define	P1 terminal function setting	0–48	0:FX	
14	P2 Define	P2 terminal function setting	0–48	1:RX	
15	P3 Define	P3 terminal function setting	0–48	5:BX	
16	P4 Define	P4 terminal function setting	0–48	27:Trv	
17	P5 Define	P5 terminal function setting	0–48	28:Trv	

9 Peripheral Devices

The reference diagram below shows a typical system configuration showing the inverter and peripheral devices.

Prior to installing the inverter, ensure that the product is suitable for the application (power rating, capacity, etc.). Also, ensure that all of the required peripherals and optional devices (resistor brakes, contactors, noise filters, etc.) are available.

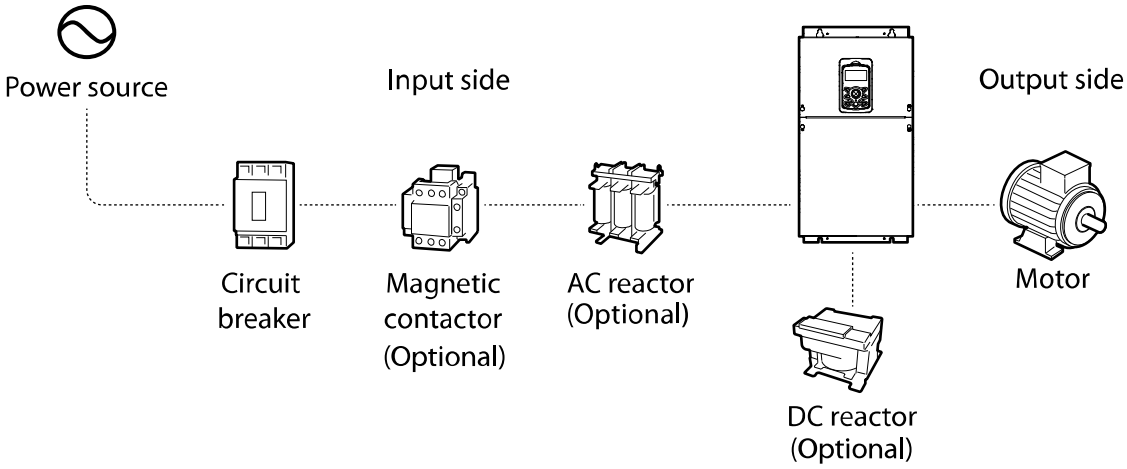

Caution

- Figures in this manual are shown with covers or circuit breakers removed to show a more detailed view of the installation arrangements. Install covers and circuit breakers before operating the inverter. Operate the product according to the instructions in this manual.
- Supply input power within the voltage range approved for the inverter's rating.
- Do not start or stop the inverter using a magnetic contactor installed in the input power supply.
- If the inverter is damaged and loses control, the machine may cause a dangerous situation. Install an additional safety device, such as an emergency brake, to prevent these situations.
- High levels of current draw during power-on can affect the system. Ensure that correctly rated circuit breakers are installed to operate safely during power-on situations.
- Reactors can be installed to improve the power factor. Note that reactors may be installed within 32.8 ft (10 m) of the power source if the input power exceeds 1000 kVA.
- 400 V class inverters require a motor with reinforced insulation. Micro surge voltages generated at the motor terminals may deteriorate the motor insulation.

9.1 Wiring Switch, Electronic Contactor, and Reactor Specifications

9.1.1 Wiring Switch, Short Circuit Switch, and Electronic Contactor

Inverter Capacity	Wiring Switch				Short Circuit Switch		Electronic Contactor	
	METASOL		SUSOL					
	Model	Rated current[A]	Model	Rated current[A]	Model	Rated current[A]	Model	Rated current[A]
0008iS7-2	ABS33c	15	UTE100	15	EBS33c	15	MC-9b	11
0015iS7-2	ABS33c	15	UTE100	15	EBS33c	15	MC-12b	13
0022iS7-2	ABS33c	30	UTE100	30	EBS33c	30	MC-18b	18
0037iS7-2	ABS33c	30	UTE100	30	EBS33c	30	MC-32a	32
0055iS7-2	ABS53c	50	UTS150	50	EBS53c	50	MC-40a	40
0075iS7-2	ABS63c	60	UTS150	60	EBS63c	60	MC-50a	55
0110iS7-2	ABS103c	100	UTS150	100	EBS103c	100	MC-65a	65
0150iS7-2	ABS103c	125	UTS150	125	EBS203c	125	MC-100a	105
0185iS7-2	ABS203c	150	UTS150	150	EBS203c	150	MC-130a	130
0220iS7-2	ABS203c	175	UTS250	175	EBS203c	175	MC-150a	150
0300iS7-2	ABS203c	225	UTS250	225	EBS203c	225	MC-150a	150
0370iS7-2	ABS403c	300	UTS400	300	EBS403c	300	MC-225a	225
0450iS7-2	ABS403c	350	UTS400	350	EBS403c	350	MC-330a	330
0550iS7-2	ABS603c	500	UTS600	500	EBS603c	500	MC-400a	400
0750iS7-2	ABS603c	630	UTS600	600	EBS603c	630	MC-630a	630
0008iS7-4	ABS33c	15	UTE100	15	EBS33c	15	MC-9b	9
0015iS7-4	ABS33c	15	UTE100	15	EBS33c	15	MC-9b	9
0022iS7-4	ABS33c	15	UTE100	15	EBS33c	15	MC-12b	12
0037iS7-4	ABS33c	15	UTE100	15	EBS33c	15	MC-18b	18
0055iS7-4	ABS33c	30	UTE100	30	EBS33c	30	MC-22b	22
0075iS7-4	ABS33c	30	UTE100	30	EBS33c	30	MC-32a	32
0110iS7-4	ABS53c	50	UTS150	50	EBS53c	50	MC-40a	40
0150iS7-4	ABS63c	60	UTS150	60	EBS63c	60	MC-50a	50
0185iS7-4	ABS103c	80	UTS150	80	EBS103c	75	MC-65a	65
0220iS7-4	ABS103c	100	UTS150	100	EBS103c	100	MC-65a	65
0300iS7-4	ABS103c	125	UTS150	125	EBS203c	125	MC-100a	105
0370iS7-4	ABS203c	150	UTS150	150	EBS203c	150	MC-130a	130
0450iS7-4	ABS203c	175	UTS250	175	EBS203c	175	MC-150a	150
0550iS7-4	ABS203c	225	UTS250	225	EBS203c	225	MC-185a	185
0750iS7-4	ABS403c	300	UTS400	300	EBS403c	300	MC-225a	225
0900iS7-4	ABS403c	400	UTS400	400	EBS403c	400	MC-330a	330
1100iS7-4	ABS603c	500	UTS600	500	EBS603c	500	MC-400a	400
1320iS7-4	ABS603c	630	UTS600	600	EBS603c	630	MC-400a	400
1600iS7-4	ABS603c	630	UTS600	600	EBS603c	630	MC-630a	630
1850iS7-4	ABS803c	800	UTS800	800	EBS803c	800	MC-630a	630

Inverter Capacity	Wiring Switch				Short Circuit Switch		Electronic Contactor	
	METASOL		SUSOL					
	Model	Rated current[A]	Model	Rated current[A]	Model	Rated current[A]	Model	Rated current[A]
2200iS7-4	ABS803c	800	UTS800	800	EBS803c	800	MC-800a	800
2800iS7-4	ABS1003b	1000	UTS1200	1000	EBS1003c	1000	1000A	1000
3150iS7-4	ABS1203b	1200	UTS1200	1200	EBS1203c	1200	1200A	1200
3750iS7-4	1400A	1400	1400A	1400	1400A	1400	1400A	1400

Caution

Only use Class H or RK5 UL listed input fuses and UL listed breakers. See the table above for the voltage and current ratings for the fuses and breakers.

Utiliser UNIQUEMENT des fusibles d'entrée homologués de Classe H ou RK5 UL et des disjoncteurs UL. Se reporter au tableau ci-dessus pour la tension et le courant nominal des fusibless et des disjoncteurs.

Note

- If you install the recommended reactors, you can maintain the power factor above 85%, and keep the THD below 40% for operations at the rated load. Improvements are reduced at lighter loads.
- Cable impedance affects the input power factor and occurrence of harmonic waves. The input power factor and THD improvement of the reactors may be lower depending on the transformer capacity, the transformer impedance, and the cable length.
- Refer to the specifications table and install recommended reactors. Although a higher inductance value (L) of the reactor results in an improvement in the power factor and better suppression of harmonic effects, power loss increases at the same time due to voltage drop.
- The capacity of built-in DC reactors in some iS7 inverter models is based on the normal duty load factor. Therefore, improvements may be reduced during a heavy duty operation.

9.1.2 Reactors

DC Reactor Specifications

The iS7 200 V / 400V 30–75 kW, 400 V/280–375 kW models are not supplied with a built-in DC reactor. Refer to the following specifications tables for different models to choose an appropriate DC reactor for your application.

<200V/30–75kW>

Inverter capacity	DC reactor specifications	
	mH	A
0300iS7-2	0.24	200
0370iS7-2	0.2	240
0450iS7-2	0.17	280
0550iS7-2	0.12	360
0750iS7-2	0.1	500

<400V/30–75kW>

(For Non-DCR products, remove the P1 and P2 shorting pins to install the DC reactor.)

Inverter capacity	DC reactor specifications	
	mH	A
0300iS7-4	0.98	75
0370iS7-4	0.87	90
0450iS7-4	0.55	110
0550iS7-4	0.47	150
0750iS7-4	0.48	180

<400V/280–375 kW>

Inverter capacity	DC reactor specifications	
	mH	A
2800iS7-4	0.09	836
3150iS7-4	0.076	996
3750iS7-4	0.064	1195

Note

All iS7 models, other than the 200 V/30–75 kW and 400 V/280–375 kW models, may be provided with an optional built-in DC reactor.

AC Reactor Specifications

You can install an AC reactor to prevent the capacitors and generators from overheating or being damaged when the power source voltage is unbalanced.

When you install an AC reactor, connect the AC reactor cables to the R, S, and T terminals on the inverter. Installation of an AC reactor is not necessary if a DC reactor is already installed in the inverter.

To avoid power loss resulting from the incorrect installation of an AC reactor, contact LSELECTRIC Customer Support to ensure that your model type and application requires the installation of an AC reactor.

Refer to the following specifications tables to choose an appropriate AC reactor for your application.

Inverter capacity	AC reactor specifications			
	Heavy duty		Normal duty	
	mH	A	mH	A
0008iS7-2	2.13	5.7	1.20	10
0015iS7-2	1.20	10	0.88	14
0022iS7-2	0.88	14	0.56	20
0037iS7-2	0.56	20	0.39	30
0055iS7-2	0.39	30	0.28	40
0075iS7-2	0.28	40	0.20	59
0110iS7-2	0.20	59	0.15	75
0150iS7-2	0.15	75	0.12	96
0185iS7-2	0.12	96	0.10	112
0220iS7-2	0.10	112	0.07	160
0300iS7-2	0.07	160	0.05	200
0370iS7-2	0.05	200	0.044	240
0450iS7-2	0.044	240	0.038	280
0550iS7-2	0.038	280	0.026	360
0750iS7-2	0.026	360	0.02	500
0008iS7-4	8.63	2.8	4.81	4.8
0015iS7-4	4.81	4.8	3.23	7.5
0022iS7-4	3.23	7.5	2.34	10
0037iS7-4	2.34	10	1.22	15
0055iS7-4	1.22	15	1.14	20
0075iS7-4	1.14	20	0.81	30

Inverter capacity	AC reactor specifications			
	Heavy duty		Normal duty	
	mH	A	mH	A
0110iS7-4	0.81	30	0.61	38
0150iS7-4	0.61	38	0.45	50
0185iS7-4	0.45	50	0.39	58
0220iS7-4	0.39	58	0.287	80
0300iS7-4	0.287	80	0.232	98
0370iS7-4	0.232	98	0.195	118
0450iS7-4	0.195	118	0.157	142
0550iS7-4	0.157	142	0.122	196
0750iS7-4	0.122	196	0.096	237
0900iS7-4	0.096	237	0.081	289
1100iS7-4	0.081	289	0.069	341
1320iS7-4	0.069	341	0.057	420
1600iS7-4	0.057	420	0.042	558
1850iS7-4	0.042	558	0.042	558
2200iS7-4	0.042	558	0.029	799
2800iS7-4	0.029	799	0.029	799
3150iS7-4	0.029	799	0.024	952
3750iS7-4	0.024	952	0.024	952

9.1.3 Dynamic Braking Unit (DBU) and Resistor

Dynamic Braking Unit Specifications

UL form	Voltage	Capacity of applied motor	Braking unit	Reference-Terminal arrangement & dimensions
UL type	200 V	30–37 kW	SV370DBU-2U	Group 1
		45–55 kW	SV550DBU-2U	
		75 kW	SV370DBU-2U, 2Set	
	400 V	30–37 kW	SV370DBU-4U	
		45–55 kW	SV550DBU-4U	
		75 kW	SV750DBU-4U	
		90 kW	SV550DBU-4U, 2Set	
		110–132 kW	SV750DBU-4U, 2Set	
		160 kW	SV750DBU-4U, 3Set	
Non UL type	400 V	45–55 kW, 75 kW	SV075DB-4	Group 3
		185–220 kW	SV2200DB-4 Note 1)	Group 4
		280–375 Kw	SV2200DB-4, 2Set	
	200 V	30–37 kW	LSLV0370DBU-2LN	Group 5
			LSLV0370DBU-2HN	Group 6
		45–55 kW, 75 kW	LSLV0750DBU-2LN	Group 5
			LSLV0750DBU-2HN	Group 6
	400 V	30–37 kW	LSLV0370DBU-4LN	Group 5
			LSLV0370DBU-4HN	Group 6
		45–55 kW, 75 kW	LSLV0750DBU-4LN	Group 5
			LSLV0750DBU-4HN	Group 6
		90 kW	LSLV0900DBU-4HN	Group 6
		110–132 kW	LSLV1320DBU-4HN	
		160 kW	LSLV1600DBU-4HN	
		185–220 kW	LSLV2200DBU-4HN	
		280–375 kW	LSLV2200DBU-4HN, 2Set	

Note 1) For model types with a rated capacity of 180 kW and above, contact LSELECTRIC Customer Support for detailed information.

Note

- The 0.75–22kW (200 V/400 V) models are provided with a built-in dynamic braking unit. Installation of additional dynamic braking units is not necessary for these models.
- Refer to the instruction manual provided by the manufacturer before installing a dynamic braking unit. There may be specification changes that are not reflected in the table provided with this manual.
- For detailed specifications of UL type DB units, such as resistance/wattage/braking torque/%ED, refer to the table in *9.1.6 DB Resistors* on page *218*. For non UL type DB units, refer to the instruction manual provided by the manufacturer.

DBU Terminal Arrangement

Group 1	Group 2
P N G B1 B2	G N B2 P/B1

Terminal	Description
G	Ground Terminal
B2	Connect to the B2 terminal of a braking resistor.
B1	Connect to the B1 terminal of a braking resistor.
N	Connect to the N terminal of an inverter.
P	Connect to the P1 terminal of an inverter.

Group 3 (75 kW DB unit)	Group 4 (220 kW DB unit)
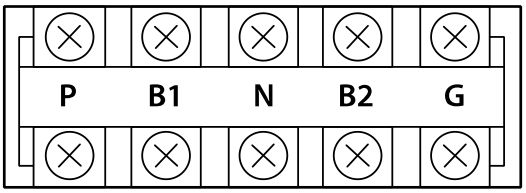	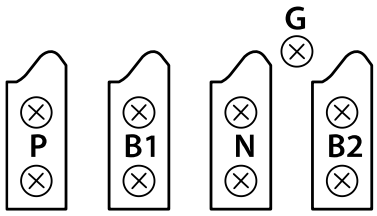

Terminal	Description
G	Ground Terminal
B2	Connect to the B2 terminal of a braking resistor.
B1	Connect to the B1 terminal of a braking resistor.
N	Connect to the N terminal of an inverter.
P	Connect to the P terminal of an inverter.

Group 5

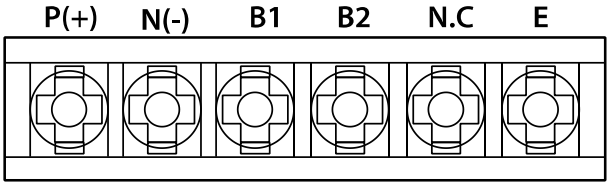

Terminal	Description
P (+)	Connect to the P terminal of an inverter.
N (-)	Connect to the N terminal of an inverter.
B1	Connect to the B1 terminal of a braking resistor.
B2	Connect to the B2 terminal of a braking resistor.
N.C	Not used
E	Ground terminal

Group 6	
A frame (37 kW, 75 kW-4)	B/C frame (75 kW-2, 90-220 kW)
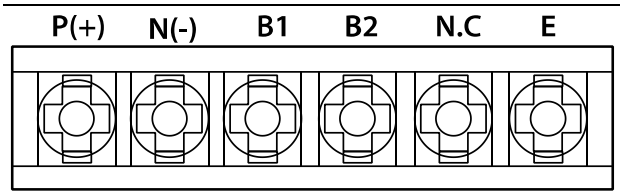	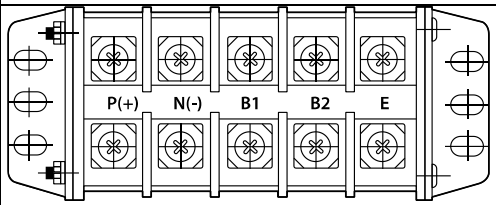

Terminal	Description
P (+)	Connect to the P terminal of an inverter (DC bus).
N (-)	Connect to the N terminal of an inverter (DC bus).
B1	Connect to the B1 terminal of an external braking resistor.
B2	Connect to the B2 terminal of an external braking resistor.
N.C	Not used
E	Ground terminal

Note

Refer to the instruction manual that is supplied with the DB unit to choose appropriate DB resistors for installation.

Basic Wiring Connection for the DB Unit and DB Resistor

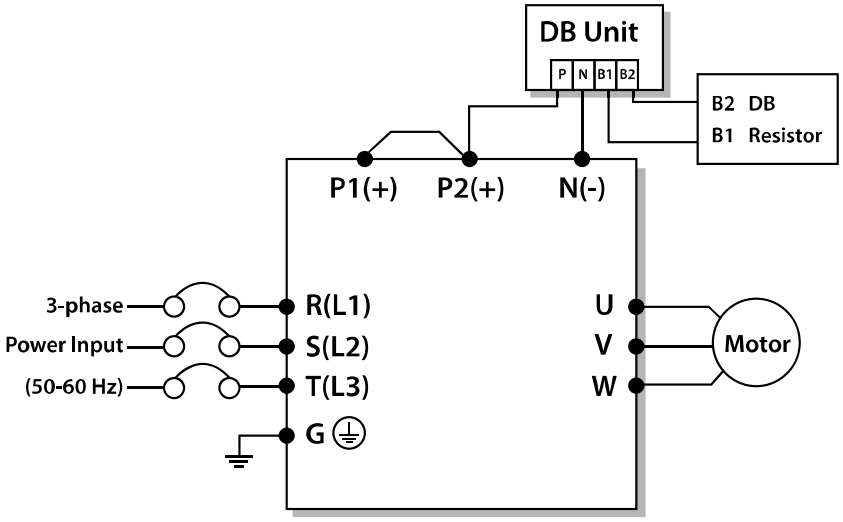

DB Unit Terminal	Description
B1	Connect to the B1 terminal of a DB resistor.
B2	Connect to the B2 terminal of a DB resistor.

9.1.4 DB Unit Dimensions

Group 1

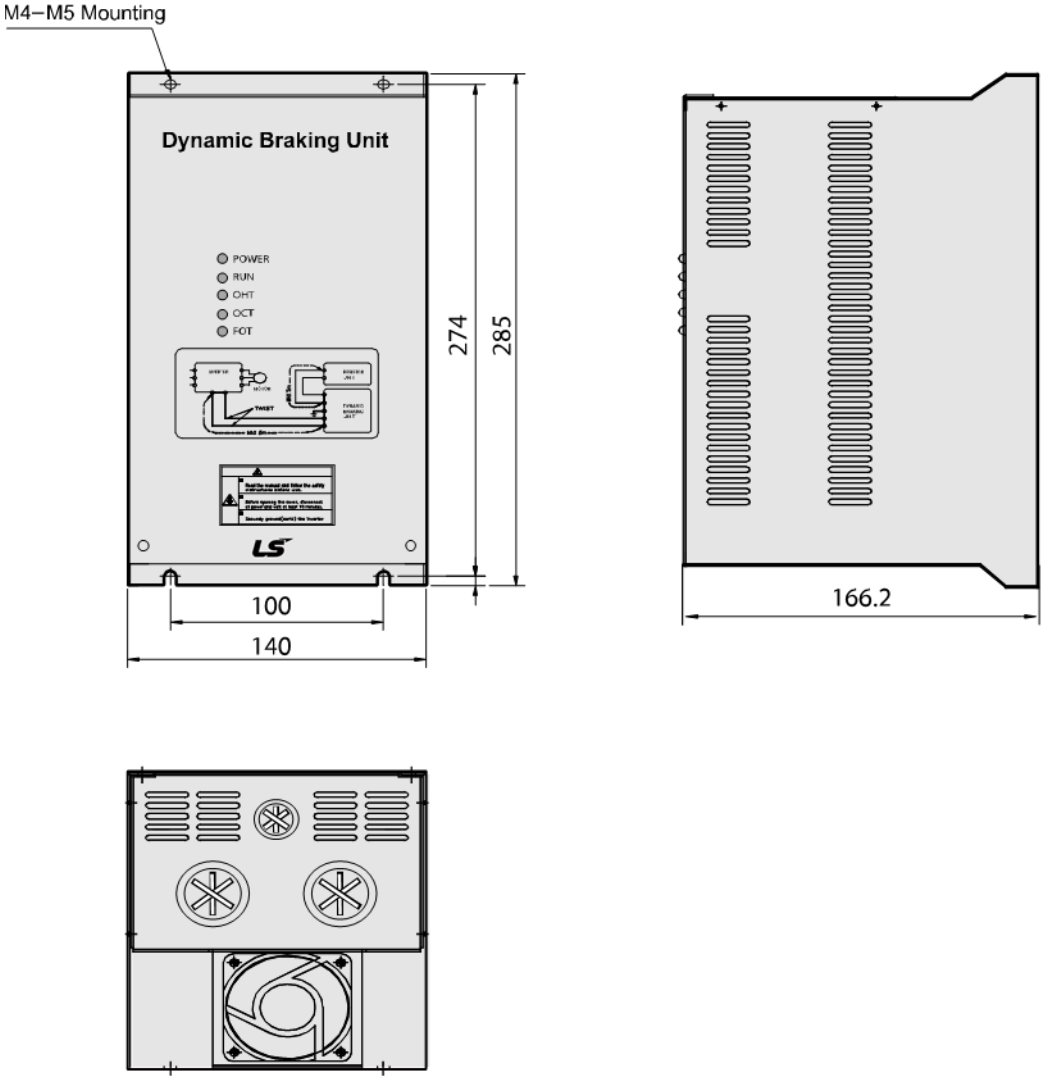

Group 2

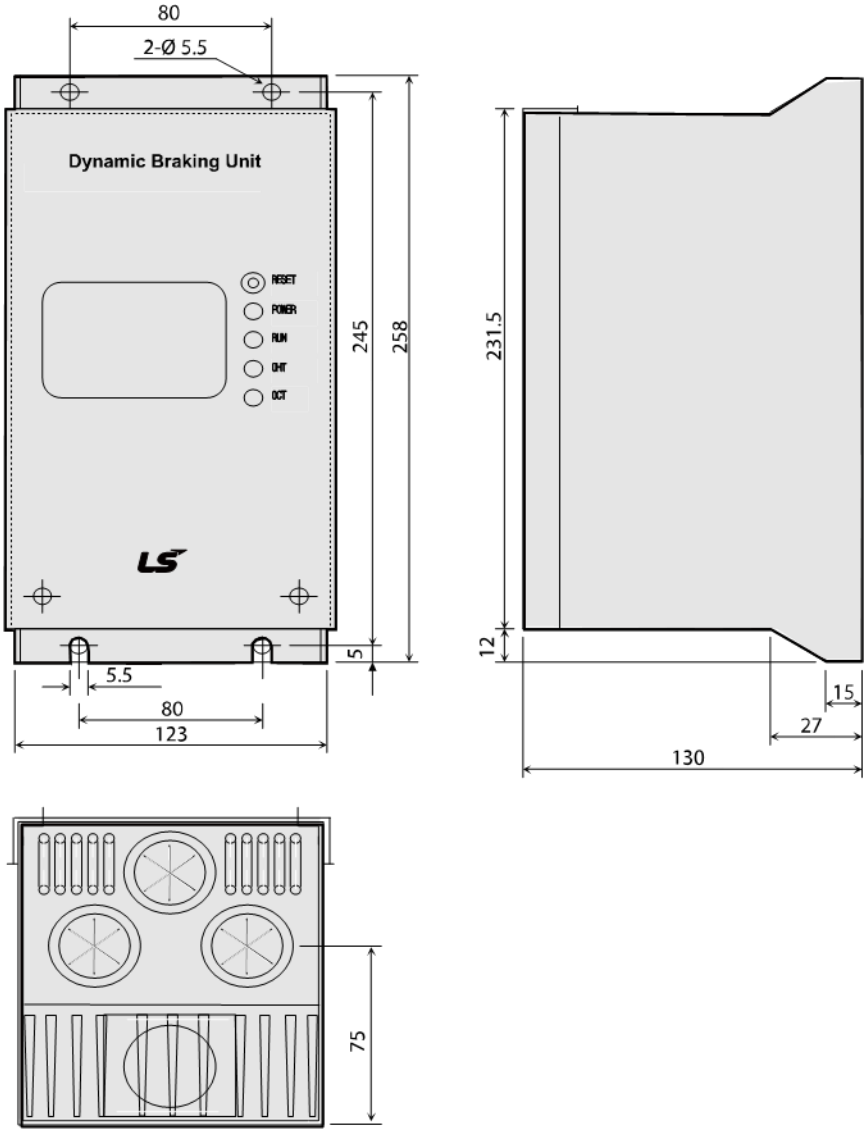
80
2-Ø 5.5
Dynamic Braking Unit
RESET
POWER
RUN
OHT
OCT
245
258
5
5.5
80
123
231.5
12
15
27
130
75

Group 3

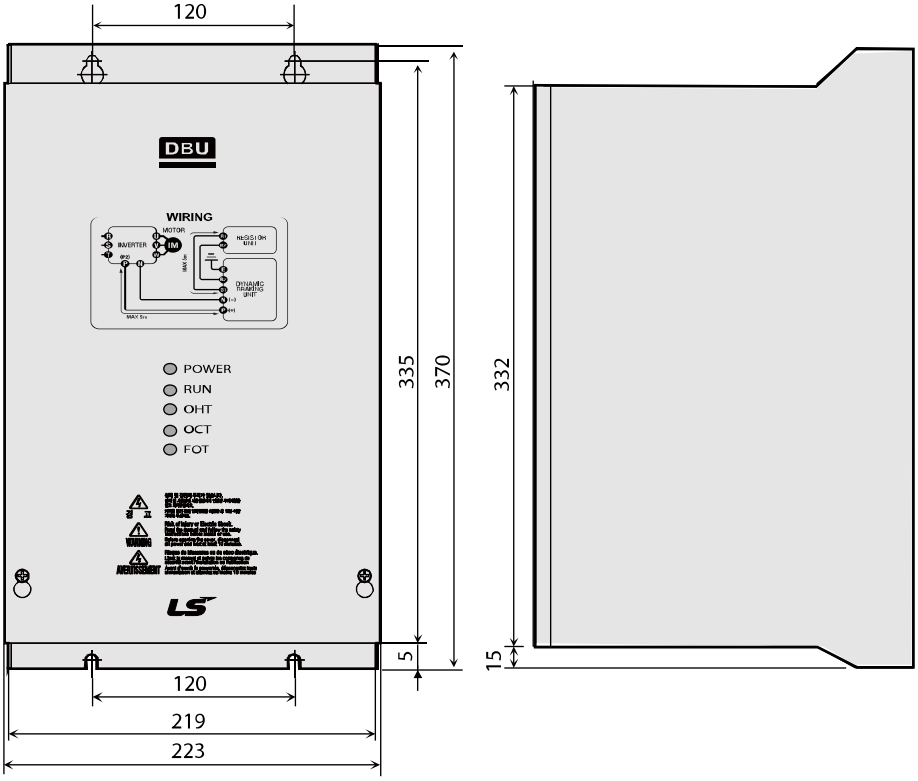
120
DBU
WIRING
MOTOR
INVERTER
IM
POWER
RUN
OHT
OCT
FOT
335
370
332
5
15
120
219
223

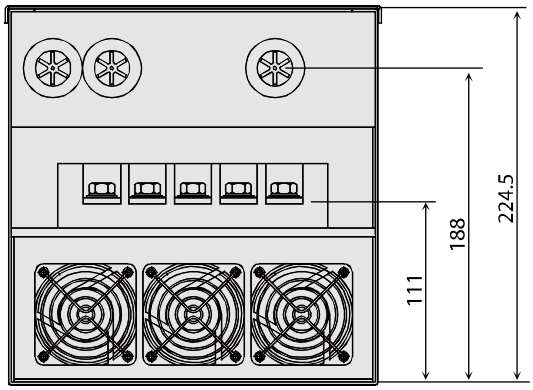
111
188
224.5

Group 4

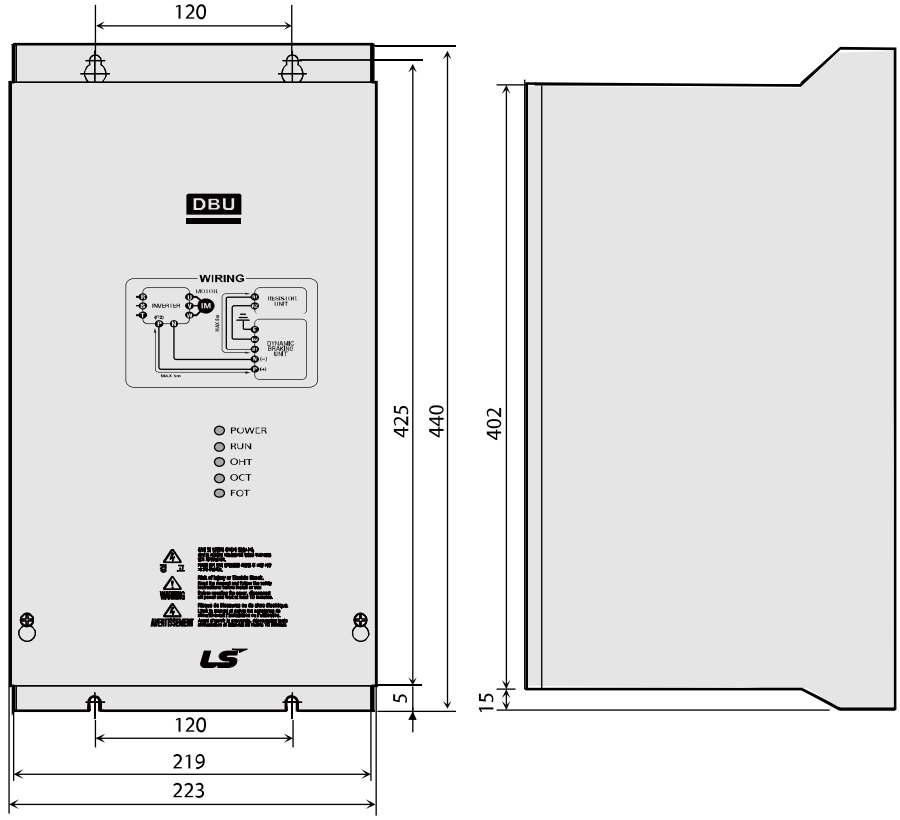
120
DBU
WIRING
POWER
RUN
OHT
OCT
FOT
425
440
402
5
15
120
219
223

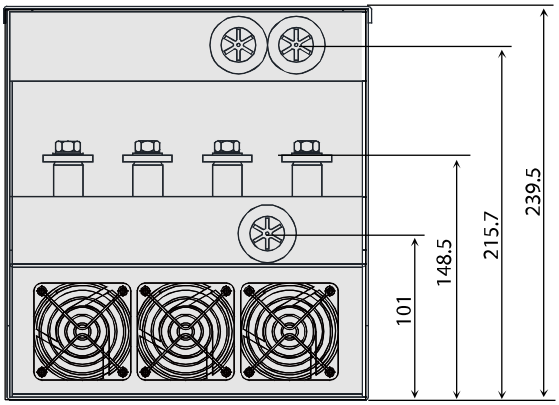
101
148.5
215.7
239.5

Group 5

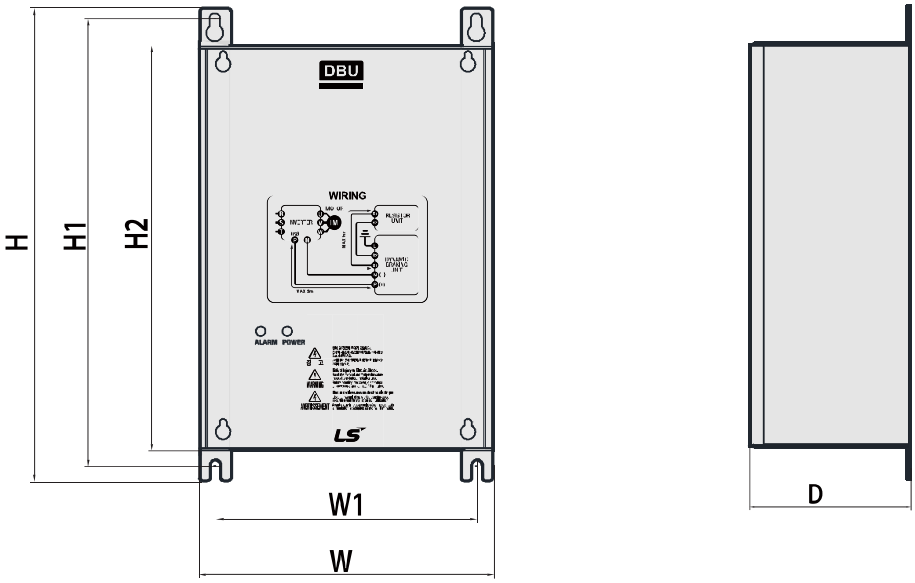

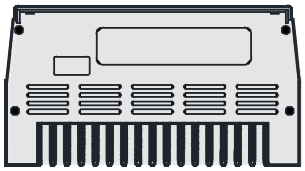

Voltage	Motor capacity	Dimensions (mm)				Hole position		Weight	Hole size
[V]	[kW]	W	H	H2	D	W1	H1	[kg]	(φ)
220	15	140	227.4	192	76.4	125	215.4	1.50	M4
	22							1.55	
	37							1.57	
	75							1.84	
440	15							1.53	
	22							1.55	
	37							1.56	
	75							1.85	

Group 6

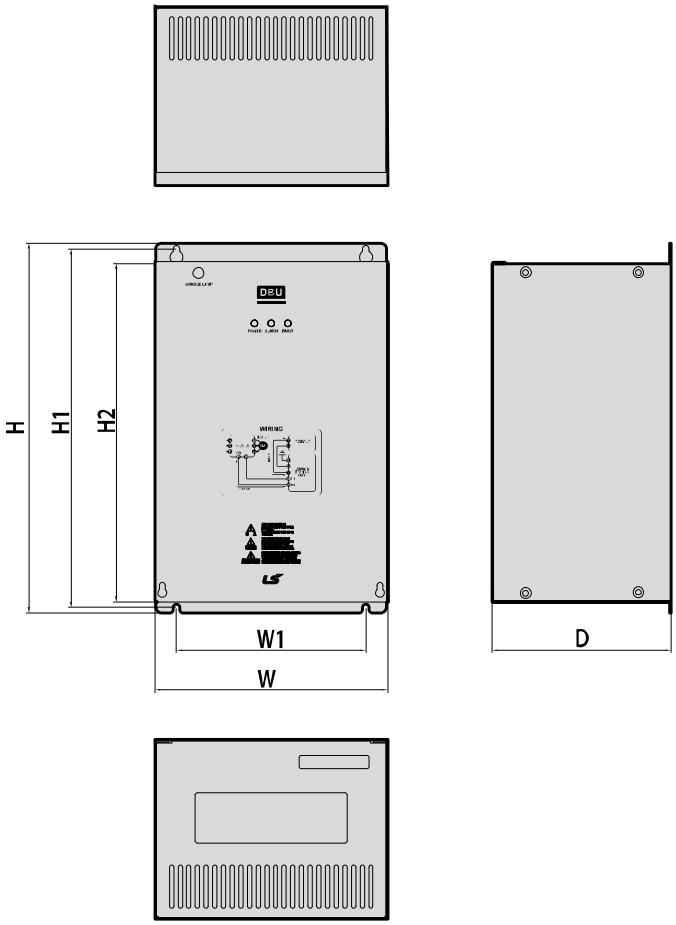

Frame	Voltage	Motor capacity	%ED	Dimensions (mm)				Hole position		Weight	Hole size
	[V]	[kW]		W	H	H2	D	W1	H1	[kg]	(φ)
A	220	37	50	200	219	190	165.2	160	208.5	3.77	M6
	440	37	50							3.84	
		75	50							3.98	
B	220	75	50	215	340	311		175	329.5	8.26	
		90	50							8.48	
	440	90	50							8.30	
		132	50							8.40	
C	440	160	50	240	380	351		200	369.5	9.40	
		220	50							9.70	

9.1.5 Indicators on the DB unit

On a DB unit, there are three LED indicators (one red and two green indicators) that indicate the operating condition of the DB unit.

Indicator name	Color	Location	Description
Power indicator	Red	Middle	Turns on when the main power is supplied to the unit (if a DB unit is connected to an inverter, the power indicator is turned on when the main power is supplied to the inverter).
RUN indicator	Green	Right	Turns on when the DB unit is regenerating.
OHT indicator	Green	Left	Turns on when the overheating protection function is enabled. If the DB unit temperature exceeds the maximum allowed operating temperature, the overheating protection function is activated to cut off the input to the DB unit (the power indicator on the DB unit is turned off).

9.1.6 DB Resistors

The following table lists UL type DB unit specifications for your reference. For non UL type DB unit specifications, refer to the instruction manuals that are supplied with the DB units.

Before installing a DB resistor, refer to the instruction manuals provided by the manufacturer to choose an appropriate type of DB resistor.

Note

When you double the duty cycle (%ED) of a DB unit, the wattage ratings of the optional DB resistor must be doubled accordingly.

	Inverter capacity (kW)	Resistance [ohm]	Wattage [W]	Type	Reference	Wiring [mm^2]	Model Type
200V Class	0.75	150	150	-	150% braking torque, 5%ED	1.25	-
	1.5	60	300	-		1.25	-
	2.2	50	400	TYPE 1		2.5	MCRF400W50
	3.7	33	600	TYPE 2		2.5	MCRF600W33
	5.5	20	800	TYPE 3		2.5	MCRF800W20
	7.5	15	1200	TYPE 5		4	MCRF1200W15
	11	10	2400	TYPE 6		4	MCRF-ST2400W10
	15	8	2400	TYPE 6		10	MCRF-ST2400W8
	18.5	5	3600	TYPE 7		20	MCRF-ST3600W5
	22	5	3600	TYPE 7		20	MCRF-ST3600W5
	30	5	5000	-	100% braking torque, 10%ED	-	-
	37	4.5	7000	-		-	-
	45	3.5	10000	-		-	-
	55	3.0	15000	-		-	-
	75	2.5	20000	-		-	-
400V Class	0.75	600	150	-	150% braking torque, 5%ED	1.25	-
	1.5	300	300	-		2	-
	2.2	200	400	TYPE 1		2.5	MCRF400W200
	3.7	130	600	TYPE 2		2.5	MCRF600W130
	5.5	85	1000	TYPE 4		2.5	MCRF1000W85
	7.5	60	1200	TYPE 5		2.5	MCRF1200W60
	11	40	2000	TYPE 6		2.5	MCRF-ST2000W40
	15	30	2400	TYPE 6		4	MCRF-ST2400W30
	18.5	20	3600	TYPE 7		6	MCRF-ST3600W20
	22	20	3600	TYPE 7		6	MCRF-ST3600W20
	30	16.9	6,400	-	100% braking torque, 10%ED	-	-
	37	16.9	6,400	-		-	-
	45	11.4	9,600	-		-	-
	55	11.4	9,600	-		-	-
	75	8.4	12,800	-		-	-
	90	4.5	15,000	-		-	-
	110	3.5	17,000	-		-	-
	132	3,0	20,000	-		-	-
	160	2.5	25,000	-		-	-
	185	2	30,000	-		-	-
	220	2	30,000	-		-	-
	280	1.5	40,000	-		-	-
	315	1	60,000	-		-	-

	Inverter capacity (kW)	Resistance [ohm]	Wattage [W]	Type	Reference	Wiring [mm^2]	Model Type
	375	1	60,000	-		-	-

Caution

- If you install multiple DB units in parallel, the combined resistance value must match the resistance value in the table above.
- If an appropriate braking resistor type is not listed in the table, find a braking resistor with equivalent resistance and wattage values that are suggested in the table above.

9.1.7 DB Resistor Dimensions

TYPE 1,2,3,4,5 (Maximum 1200 Watts)

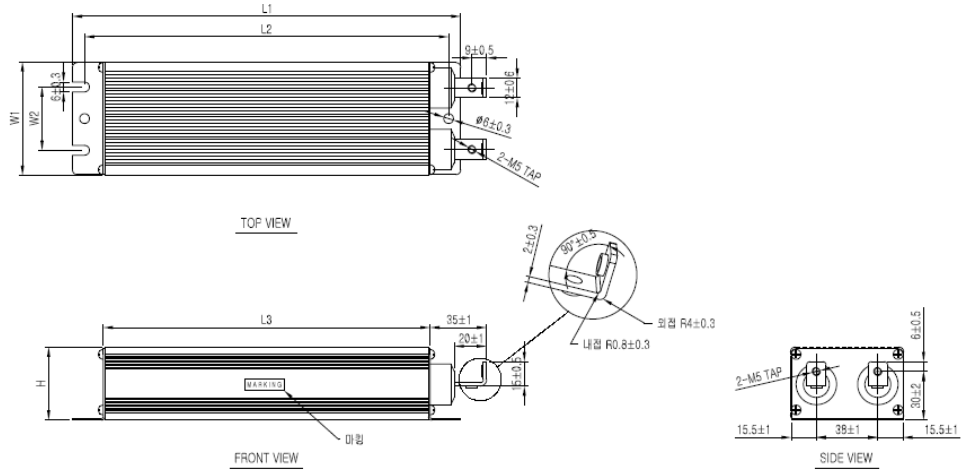

TYPE	Size [mm]					
	W	H	D	A	B	C
1	220	175	152	70	39	45
2	260	245	222	70	39	45
3	300	285	262	70	39	45
4	340	325	302	70	39	45
5	400	385	362	70	39	45

TYPE 6 (Maximum 2400 Watts)

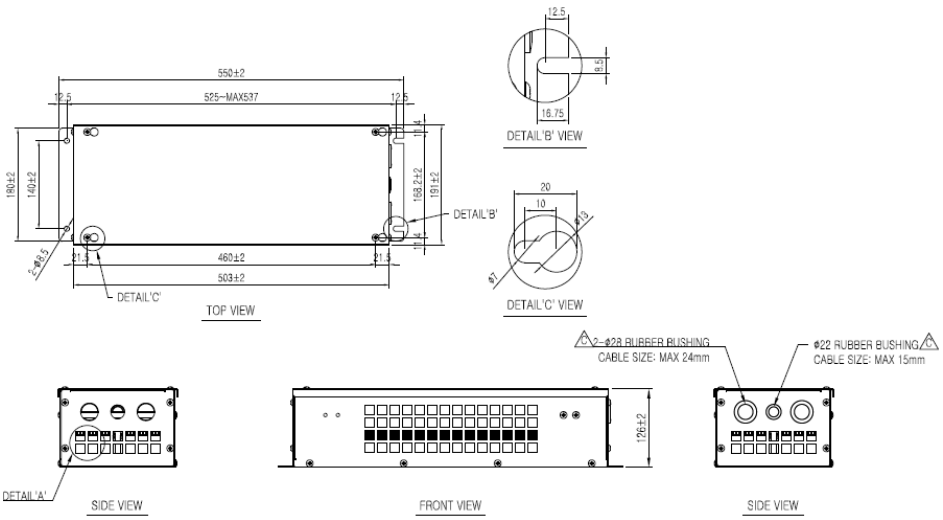

TYPE 7 (Maximum 3600 Watts)

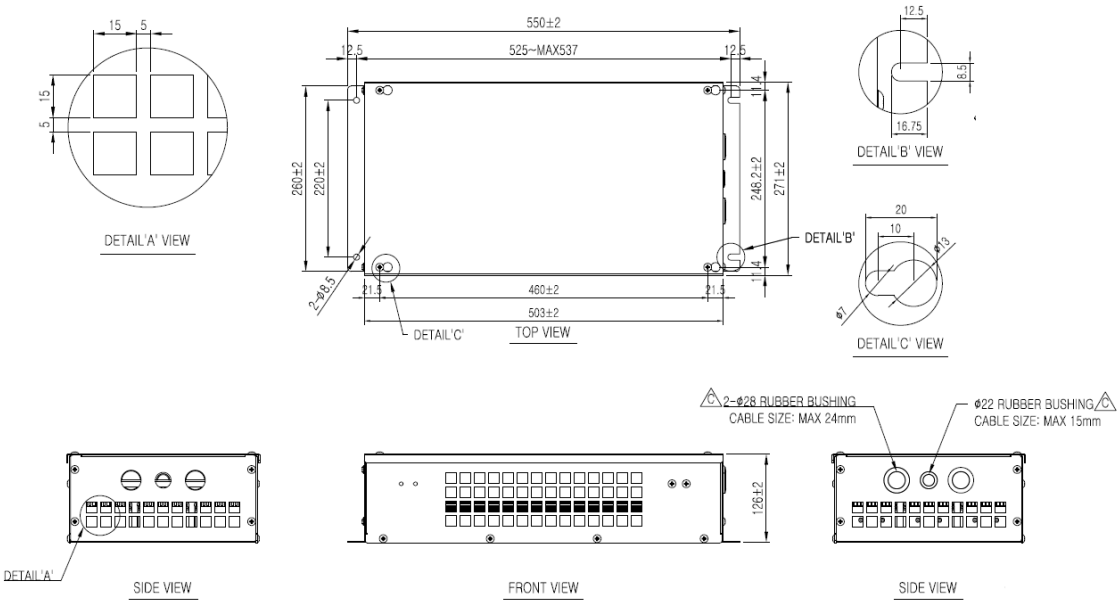

9.1.8 Keypad Extension Cable for Remote Control (Optional)

Included items

Items	
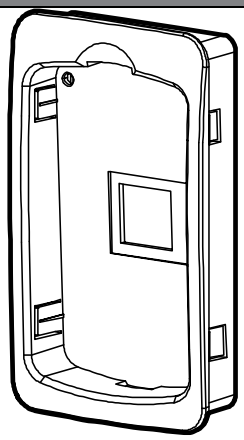	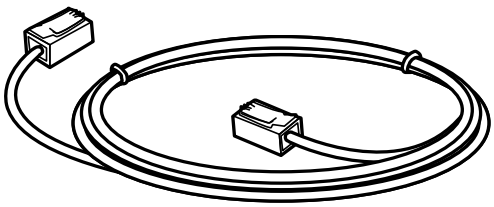
Keypad bracket	Remote cable (2 m/3 m)

Keypad Bracket Dimensions

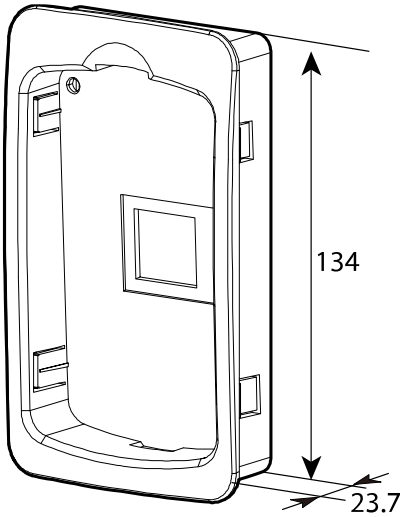

Remote Cable Specifications

Model type	Part name
64110009	INV, iS7 REMOTE CABLE (2 M)
64110010	INV, iS7 REMOTE CABLE (3 M)

Installing the Remote Cable

Refer to the following figure to install the remote cable to extend the keypad cable length.

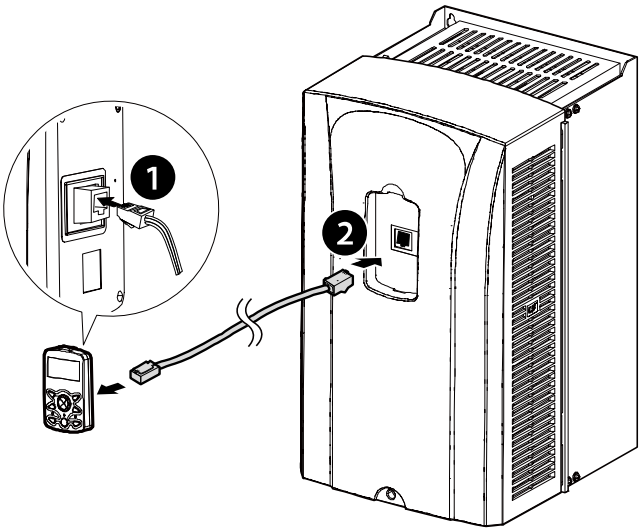

If a “Line Check” message is displayed on the keypad display and the keypad is not operating correctly after installing the remote cable, check the cable connection on both sides.

Caution

Do not extend the keypad cable using a third-party extension cable. The keypad may not operate correctly due to voltage drop and electromagnetic interference.

Note

- Ensure that the cable length between the keypad and the inverter does not exceed 10 ft (3.04 m). Cable connections longer than 10 ft (3.04 m) may cause signal errors.
- Install a ferrite clamp to protect signal cables from electromagnetic interference (Ex. Wurth Electronics ferrite clamp PN742732).

10 Safety Funtion STO(Safe Torque Off)

The iS7 Inverter series provides resilient safety features via optional safety expansion module. When an emergency arises, it instantly blocks inverter output to protect the operator and reduce the risk.

10.1 Safety Standard Product

The performance levels for the safety function are as follows.

- EN 61800-5-2:2007
- EN 61508-1:2010 / EN 61508-2:2010
- SIL 2 / PFH : 3.69E-07

Caution

When using the safety function, perform a risk assessment for the system and ensure that it meets the safety requirements.

Note

When wiring the inverter or performing maintenance, the inverter must be turned off. The safety function is not used to block the power supply to the motor or insulate the inverter electrically.

10.2 About the Safety Function

The safety function is a safety torque off (STO) function used to prevent a torque and to block the power supply to the motor by interrupting the gate using hard wires.

STO (Safety Torque Off): IEC61800-5-2

The STO function is independently connected to each input signal for 2 channels (SE(SFT11) and SP(SFT2)). The connected circuit cuts off the operation signal for the inverter output and turns off the power modules.

If the safety function is activated during operation, the inverter blocks the output and the motor enters Free Run mode. Also, the “Safety Opt Err” message is displayed on the keypad.

To release the fault trip, short-circuit terminal block to return to the normal operation status and press the [STOP/RESET] key.

The response time from receiving the safety input signal to turning off the inverter output (Safe state) is within 10 msec.

10.2.1 Safety Function Wiring Diagram

[When using 24V internal source]

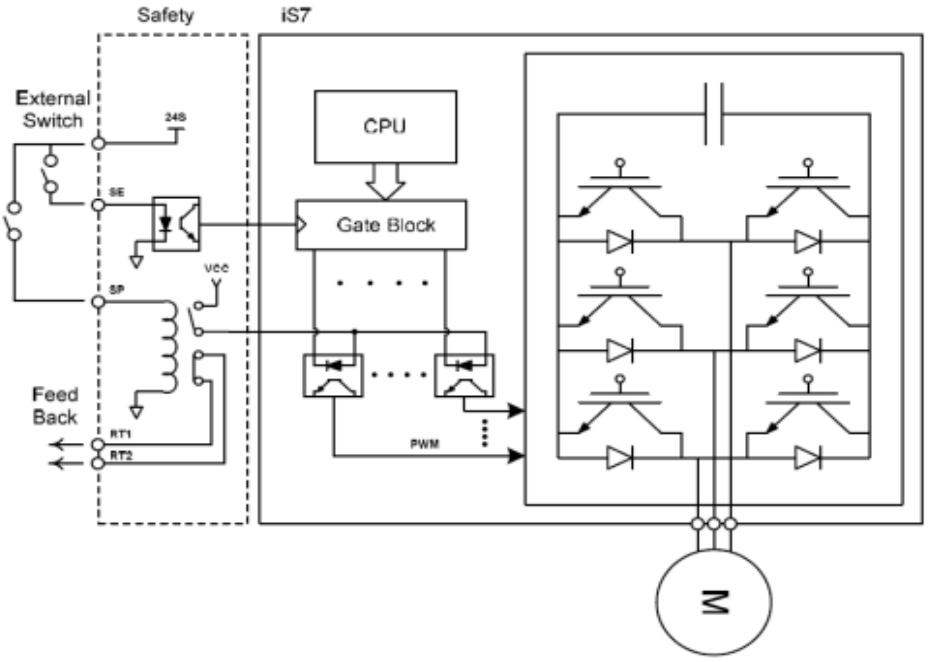

[When using 24V External source]

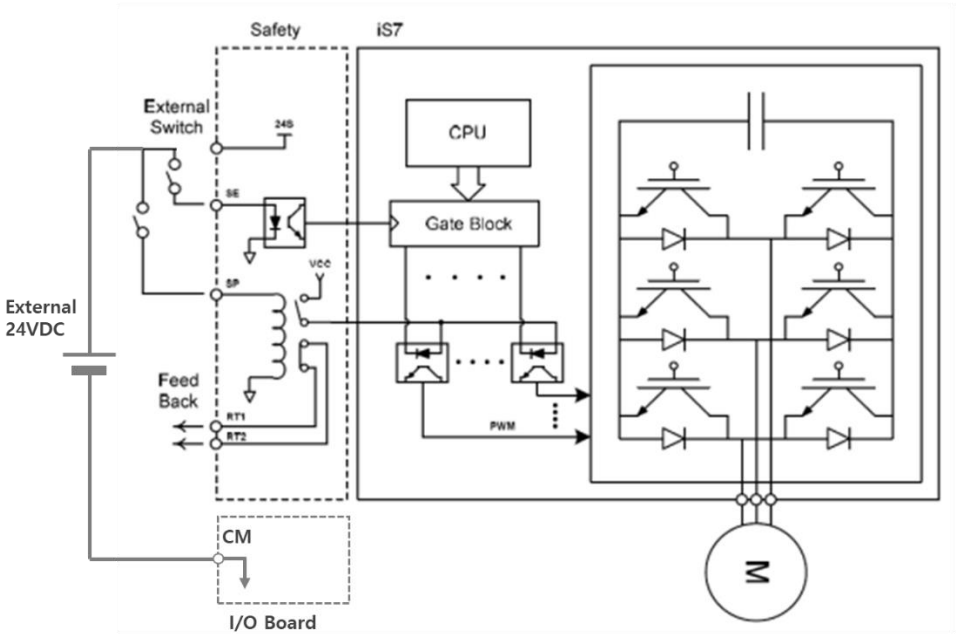

10.2.2 Installing the Safety Board to 0.75–160 kW Product

ex) 3.7KW product (when using 24V external source)

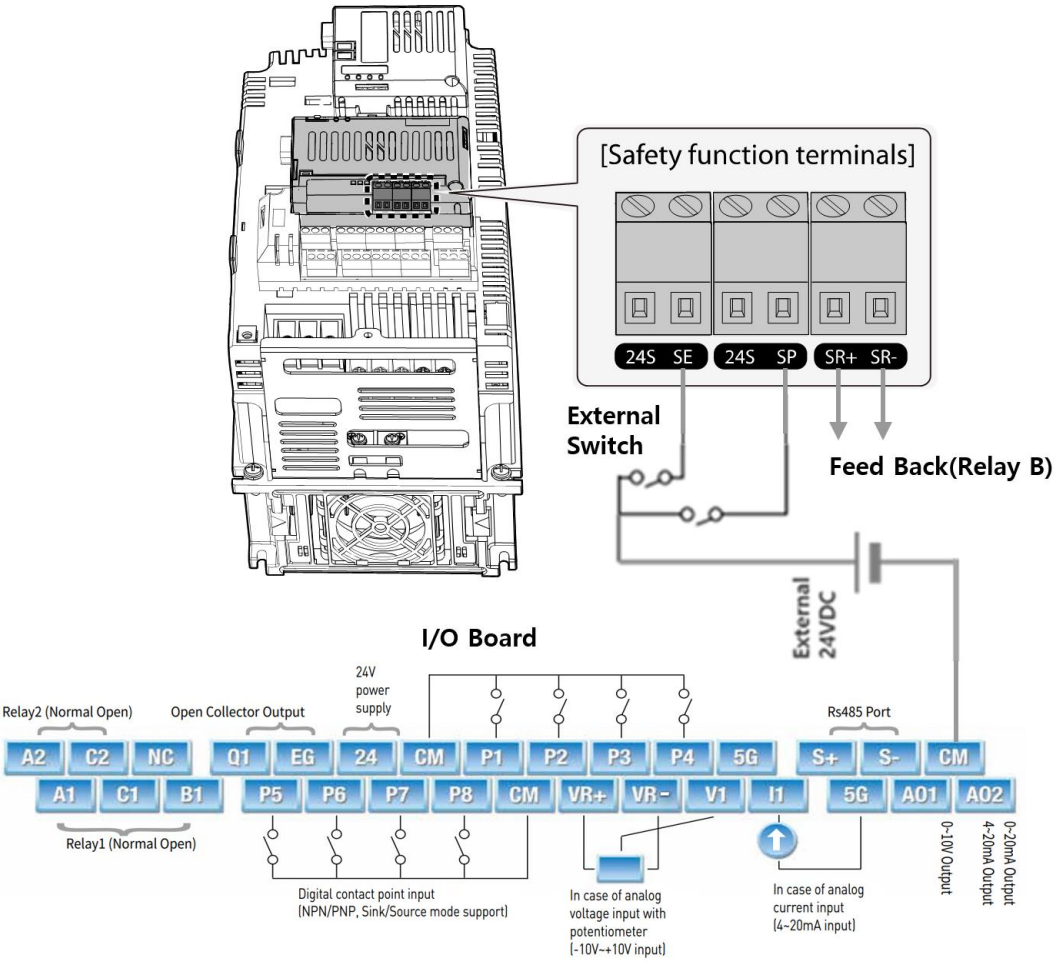

Caution

Because 0.75-160kW products provide safety purpose product, therefore please use this product with safety option.
Safety options are not available for general products.

10.2.3 Installing the Safety Board to 185–375 kW Product

Please buy safety option and apply to standard products because there is no safety product for 185-375kW.

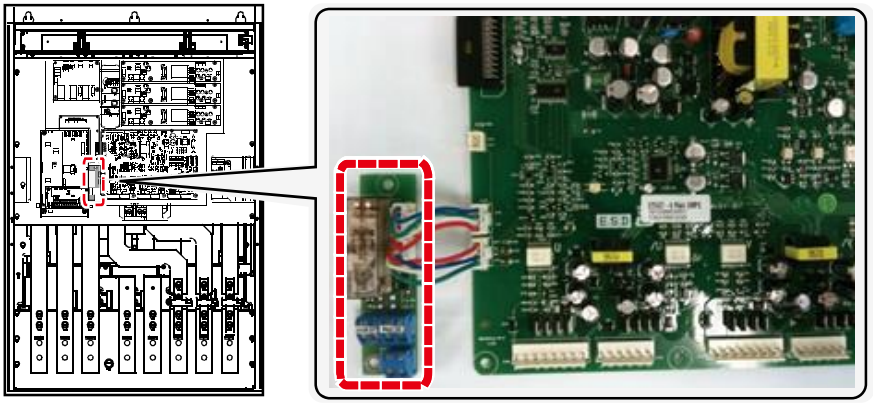

Refer to the following figure and install the safety board to the main SMPS board of the inverter using cable connectors.

10.2.4 Safety Function Terminal Description

24S – SE (SFT1)	24S – SP (SFT2)	SR + SR-
Short: Normal operation	Short: Normal operation	B Contact relay output terminal
Open: Safety Trip (output blockage)	Open: Safety Trip (output blockage)	

10.2.5 Cable Specification for Signal Terminal Block Wiring

Terminal		Wire Thickness		Electrical Standard
Variety	Name	mm^2	AWG	
24S	Safety Input power	0.33–1.25mm^2 (16–22 AWG) Shield type twisted-pair wire		24 VDC, Max. 10 mA
SE	Safety Input 1 (SFT1)			Short: Safety function stop (24S-SE or SP) Open: Safety function operation (24S-SP or SP)
SP	Safety Input 2 (SFT2)			
SR+,SR-	Safety function completion output relay			DC 24 V, 5 A below (B contact)

Caution

The length of the safety wiring at the input terminal must be less than 30 m.
Using over 30M may cause malfunctions because of noise.

10.3 Test Safety Functions and Check Abnormal Conditions

Safety Diagnostics

If a fault is detected, the IS7 inverter outputs a fault signal and displays 'Safety Opt Err' on the Loader display.

1) Verify that the input signal logic is the same for terminal block 24S-SE and 24S-SP, open any one of the input signals. If so, do the following.

2) Wire both the input signals on the terminal block 24S-SE and 24S-SP in short state, then reset or power it off and on.

3) If 'Safety Opt Err' messages and other messages are displayed, the IS7 inverter may be malfunctioning.

Self Diagnostic Test

The IS7 inverter has a power-on self-diagnosis test function.

If fault signals (SR+, SR-) are output when the inverter is powered on, perform a safety diagnosis.

Operation check procedure

1) Change and check the status of the safety function terminal.

2) If the operation of the inverter differs from the description of the safety function terminal, there is a possibility of IS7 malfunctioning.

3) If the inverter operates in the same way as described in the safety function terminal, check the system performance.

Operate the emergency switch to verify STO operation.

4) Finally, delete the fault trip history of IS7 (see manual CNF-24 for instructions on how to delete the fault)

11 Marine Certification

Marine classification is that the structure and equipment of the ship has been estimated from the test with the certain standards for certificate issued and given by classification society.
SV-IS7 Series is certificated with product testing, process, production equipment and test equipment to install on the shipping.

11.1 DNV (Det Norske Veritas) Marine Certification Details

Certification Institute	DNV (Det Norske Veritas)
Certificate Number	TAE00001S1
Certified Model Types	Frequency Converter for Asynchronous Motors SV series (Range: 0.75 kW–375 kW 200–400 VAC supply)
Compliance	Det Norske Veritas' Rules for Classification of Ships, High Speed & Light Craft Det Norske Veritas' Offshore Standards

11.2 Bureau Veritas (Marine & Offshore Division) Marine Certification Details

Certification Institute	Bureau Veritas (Marine&Off shore Division)
Certificate Number	40183/AO BV
Certified Model Types	SV-iS7 series (Range: 0.75 kW–75 kW, 200V / 0.75 kW–375 kW, 400V)
Compliance	Bureau Veritas Rules for the Classification of Steel Ships

11.3 ABS Marine Certification Details

Certification institute	ABS (American Bureau of Shipping)
Certificate Number	14-BK1291913-PDA
Certified Model Types	SV-iS7 series (Range: 0.75 kW–75 kW, 200V / 0.75 kW–90 kW, 400V)
Compliance	Installation of the product on an ABS class vessel, MODU or facility

11.4 KR Marine Certification Details

Certification institute	KR (Korean Resister)
Certificate Number	PTD25585-AC003
Certified Model Types	SV-iS7 series (Range: 0.75 kW–75 kW, 200V / 0.75 kW–375 kW, 400V)
Compliance	Korean Resister's Rules for Classification of Steel Ships

11.5 Marine Certification Models for SV-iS7 Products

Type		DNV	BV	ABS	KR
3-Phase 200V	SV0008iS7-2□□□□V	O	O	O	O
	SV0015iS7-2□□□□V	O	O	O	O
	SV0022iS7-2□□□□V	O	O	O	O
	SV0037iS7-2□□□□V	O	O	O	O
	SV0055iS7-2□□□□V	O	O	O	O
	SV0075iS7-2□□□□V	O	O	O	O
	SV0110iS7-2□□□□V	O	O	O	O
	SV0150iS7-2□□□□V	O	O	O	O
	SV0185iS7-2□□□□V	O	O	O	O
	SV0220iS7-2□□□□V	O	O	O	O
	SV0300iS7-2□□□□V	O	O	O	O
	SV0370iS7-2□□□□V	O	O	O	O
	SV0450iS7-2□□□□V	O	O	O	O
	SV0550iS7-2□□□□V	O	O	O	O
	SV0750iS7-2□□□□V	O	O	O	O
3-Phase 400V	SV0008iS7-4□□□□V	O	O	O	O
	SV0015iS7-4□□□□V	O	O	O	O
	SV0022iS7-4□□□□V	O	O	O	O
	SV0037iS7-4□□□□V	O	O	O	O
	SV0055iS7-4□□□□V	O	O	O	O
	SV0075IS7-4□□□□V	O	O	O	O
	SV0110iS7-4□□□□V	O	O	O	O

Type		DNV	BV	ABS	KR
	SV0150iS7-4□□□□V	O	O	O	O
	SV0185iS7-4□□□□V	O	O	O	O
	SV0220iS7-4□□□□V	O	O	O	O
	SV0300iS7-4□□□□V	O	O	O	O
	SV0370iS7-4□□□□V	O	O	O	O
	SV0450iS7-4□□□□V	O	O	O	O
	SV0550iS7-4□□□□V	O	O	O	O
	SV0750iS7-4□□□□V	O	O	O	O
	SV0900iS7-4□□□□V	O	O	O	O
	SV1100iS7-4□□□□V	O	O	X	O
	SV1320iS7-4□□□□V	O	O	X	O
	SV1600iS7-4□□□□V	O	O	X	O
	SV1850iS7-4□□□□V	O	O	X	O
	SV2200iS7-4□□□□V	O	O	X	O
	SV2800iS7-4□□□□V	O	O	X	O
	SV3150iS7-4□□□□V	O	O	X	O
	SV3750iS7-4□□□□V	O	O	X	O

12 Using a Single Phase Power Source

12.1 Single Phase Rating

The SV-iS7 series inverter is a three-phase variable frequency drive (VFD). When applying single-phase power to a three-phase VFD, there are several limitations that need to be considered.

The standard pulse-width-modulated (PWM) VFDs use a 6-pulse diode rectifier. The 6-pulse rectification results in 360 Hz(or 300 Hz) DC bus ripple when using a three-phase 60 Hz(or 50 Hz) power supply. However, when using a single-phase power source, the DC bus ripple becomes 120 Hz(or 100 Hz). The input current and harmonics increase, and the VFDs DC bus circuit is subject to higher stress in order to deliver equivalent power.

Input current distortion of 90% THD and greater can be expected under single-phase input, compared to approximately 40% with three-phase input as indicated in Figure 2.

Therefore, use of a single-phase requires the three-phase VFD power rating to be reduced (derated) to avoid over stressing the rectifier and the DC link components.

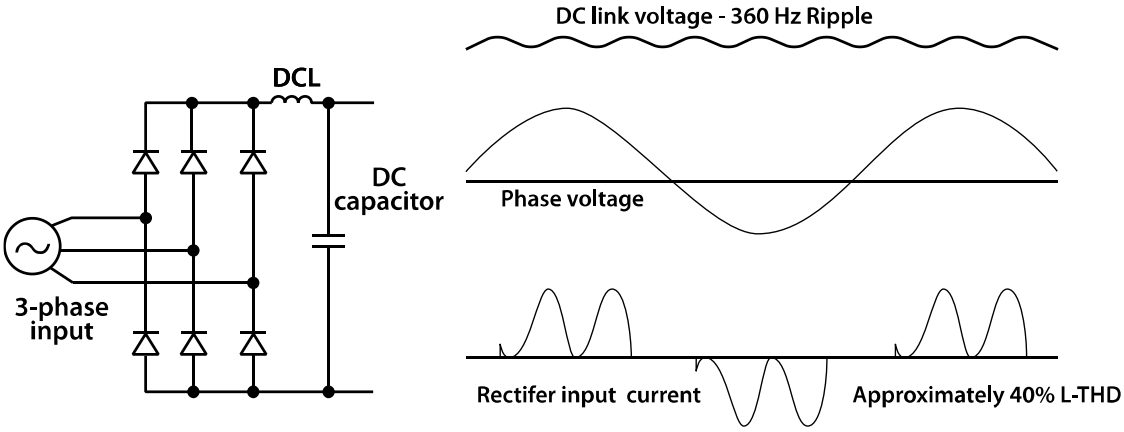

<Figure-1 Typical 60 Hz Three-Phase Configuration>

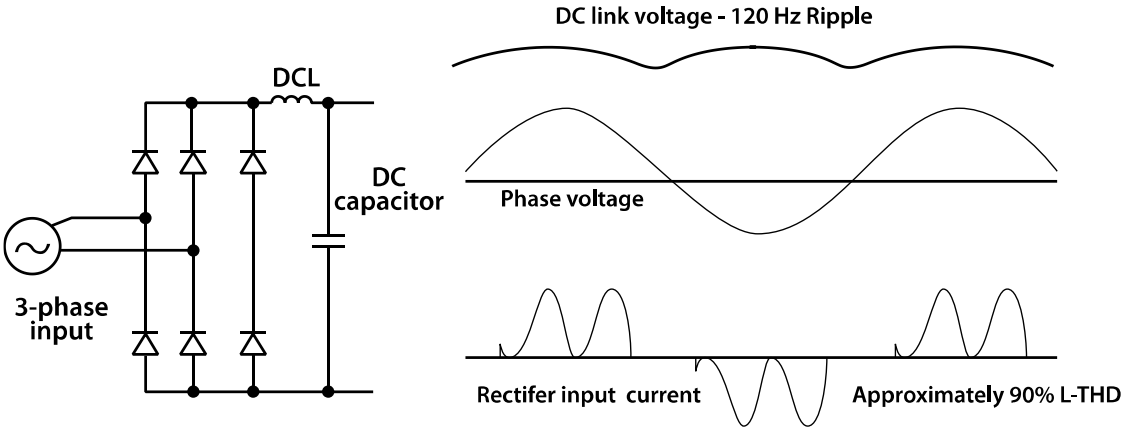

<Figure-2 Typical 60 Hz Single-Phase Configuration>

12.2 Power(HP), Input Current and Output Current

When using a three-phase VFD with single-phase input, derating the drive's output current and horsepower will be necessary due to the increase in DC bus ripple voltage and current. In addition, the input current through the remaining two phases on the diode bridge converter will approximately double, creating another derating consideration for the VFD. Input current harmonic distortion will increase, making the overall input power factor low.

Input current distortion over 100% is likely under single-phase conditions without a reactor. Therefore, the reactor is always required for such applications.

Using a motor that is selected by the three-phase drive ratings with single-phase input may result in poor performance and premature drive failure.

The selected drive of single-phase current ratings must meet or exceed the motor current ratings as indicated in the following table.

12.3 Input Frequency and Voltage Tolerance

The AC supply voltage must be within the required voltage range of 240/480 VAC +10% to –5% to maximize motor power production.

The standard product with three-phase voltage input has an allowable range of +10% to –15%. A stricter input voltage tolerance of +10 to –5% applies when using the drive with a single-phase supply. The average bus voltage with single-phase input is lower than the equivalent of a three-phase input. Therefore, the maximum output voltage (motor voltage) will be lower with a single-phase input.

The minimum input voltage must be no less than 228 VAC for 240 volt models and 456 VAC for 480 V models, to ensure motor voltage production of 207 VAC and 415 VAC, respectively.

If full motor torque must be developed near the base speed (full power) it will be necessary to maintain a rigid incoming line voltage so that adequate motor voltage can be produced.

Operating a motor at reduced speed (reduced power), or using a motor with a base voltage that is lower than the incoming AC supply rating (ex. 208 VAC motor with a 240 VAC supply) will also minimize the effect of voltage deprivation (240 VAC Input for 208 V motor, 480 VAC Input for 400 V motor).

12.4 Wiring and Peripheral Device

It is important that input wiring and branch circuit protection be selected based on the drive's single-phase input current rating indicated in Table 1–2.

The single-phase input current after derating differs from the three-phase input indicated on the VFD nameplate.

Refer to the following figure and connect the single-phase AC input wiring to the inverter's R[L1] and T[L3] terminals.

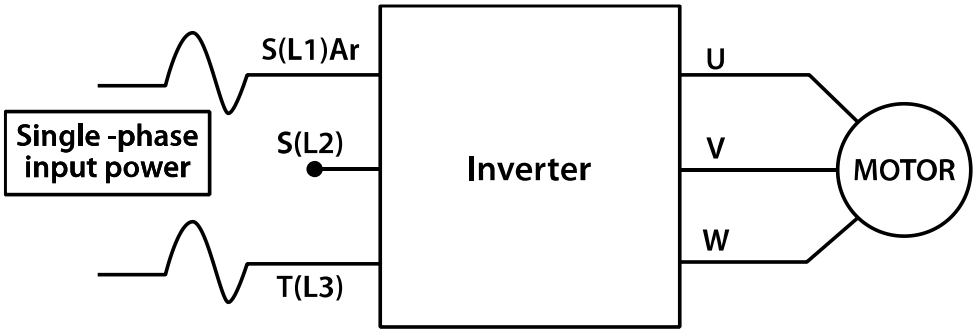

<Figure-3 Terminal Wiring Diagram>

Single-Phase Rating (240 V / 50~60 Hz Input)													
[kW]	[HP]	Single-Phase Current Rating				Wire Selection		FUSE		DC Link Choke		MCCB	Electronic Contactor
		Output Amp		Input Amp		AWG							
		HD [A]	ND [A]	HD [A]	ND [A]	R,S,T	U,V,W	[A]	[V]	[mH]	[A]	LSELECTRIC(UL Type)	
0.75kW	1	2.6	4.1	4.3	6.8	14	14	10	500V	Built-in		UTE100/15A	MC-9b
1.5kW	2	4.0	6.0	6.9	10.6	14	14	15				UTE100/15A	MC-12b
2.2kW	3	6.2	8.2	11.2	14.9	14	14	20				UTE100/30A	MC-18b
3.7kW	5	8.1	12	14.9	21.3	12	12	32				UTE100/30A	MC-32a
5.5kW	7.5	12	16	22.1	28.6	10	10	50				UTS150/50A	MC-40a
7.5kW	10	16	23	28.6	41.2	8	8	63				UTS150/60A	MC-50a
11kW	15	24	31	44.3	54.7	6	6	80				UTS150/100A	MC-65a
15kW	20	31	38	55.9	69.7	4	4	100				UTS150/125A	MC-100a
18.5kW	25	38	45	70.8	82.9	2	2	125				UTS150/150A	MC-130a
22kW	30	45	64	85.3	116.1	1	1	160				UTS250/175A	MC-150a
30kW	40	60	75	121.0	152.0	1/0	1/0	200		0.24	200	UTS250/225A	MC-150a
37kW	50	75	93	154.0	190.0	2/0	2/0	250		0.2	240	UTS400/300A	MC-225a
45kW	60	93	114	191.0	231.0	2/0	2/0	350		0.17	280	UTS400/350A	MC-330a
55kW	75	114	149	233.0	302.0	3/0	3/0	400		0.12	360	UTS600/500A	MC-400a
75kW	100	149	178	305.0	362.0	4/0	4/0	450		0.1	500	UTS600/600A	MC-630a

Table 1. Single-Phase Rating(240 V Type)

Single-Phase Rating (480 V / 50~60 Hz Input)													
[kW]	[HP]	Single-Phase Current Rating				Wire Selection		FUSE		DC Link Choke		MCCB	Electronic Contactor
		Output Amp		Input Amp		AWG							
		HD [A]	ND [A]	HD [A]	ND [A]	R,S,T	U,V,W	[A]	[V]	[mH]	[A]	LSELECTRIC(UL Type)	
0.75kW	1	1.4	2.2	2.2	3.7	14	14	10	500V	Built-in		UTE100/15A	MC-9b
1.5kW	2	2.1	3.2	3.6	5.7	14	14	10				UTE100/15A	MC-9b
2.2kW	3	2.8	4.1	5.5	7.7	14	14	15				UTE100/15A	MC-12b
3.7kW	5	4.1	6.1	7.5	11.1	14	14	20				UTE100/15A	MC-18b
5.5kW	7.5	6.1	8.0	11.0	14.7	12	12	32				UTE100/30A	MC-22b
7.5kW	10	8.1	12	14.4	21.9	12	12	35				UTE100/30A	MC-32a
11kW	15	12	16	22.0	26.4	10	10	50				UTS150/50A	MC-40a
15kW	20	16	20	26.6	35.5	8	8	63				UTS150/60A	MC-50a
18.5kW	25	20	23	35.6	41.1	6	6	70				UTS150/80A	MC-65a
22kW	30	23	31	41.6	55.7	4	4	100				UTS150/100A	MC-65a
30kW	40	32	39	55.5	67.5	4	4	125				UTS150/125A	MC-100a
37kW	50	39	47	67.9	81.7	4	2	125				UTS150/150A	MC-130a
45kW	60	47	57	82.4	101.8	1	1	160				UTS250/175A	MC-150a
55kW	75	57	78	102.6	143.6	1/0	1/0	200				UTS250/225A	MC-185a
75kW	100	78	94	143.4	173.4	2/0	2/0	250				UTS400/300A	MC-225a
90kW	120	95	116	174.7	212.9	4/0	4/0	350				UTS400/400A	MC-330a
110kW	150	116	138	213.5	254.2	4/0	4/0	400				UTS600/500A	MC-400a
132kW	180	134	165	255.6	315.3	300	300	450				UTS600/600A	MC-400a
160kW	225	166	189	316.3	359.3	400	400	450				UTS600/600A	MC-630a

Table 2. Single-Phase Rating (480 V Type)

12.5 Other Considerations

The following lists other precautions that need to be considered when using a three-phase VFD using single-phase power source.

- Depending on the increased DC ripple, sensorless mode may result in poor performance when operating a three-phase inverter using single-phase power supply.
- If a phase open trip occurs, cancel the input phase open protection bit setting (PRT-05: Phase Loss Chk).
- Do not allow the current to exceed the single-phase rating. Motor capacity, motor overload trip, and E-thermal functions must be set to protect motor.
- A reactor is always required. Use a model type that comes with built-in DC reactor. The iS7 200 V 30–75kW and 400 V 280–375 kW products do not have built-in DC reactors. Install an external AC reactor separately for these model types (Do not install DC reactors externally).

EC DECLARATION OF CONFORMITY

We, the undersigned,

Representative:	**LS ELECTRIC Co., Ltd.**
Address:	**LS Tower, 127, LS-ro, Dongan-gu, Anyang-si, Gyeonggi-do, Korea**
Manufacturer:	**LS ELECTRIC Co., Ltd.**
Address:	**56, Samseong 4-gil, Mokcheon-eup, Dongnam-gu, Cheonan-si, Chungcheongnam-do, Korea**

Certify and declare under our sole responsibility that the following apparatus:

Type of Equipment:	**Inverter (Power Conversion Equipment)**
Model Name:	**STARVERT-*i*S7 series**
Trade Mark:	**LS ELECTRIC Co., Ltd.**

Conforms with the essential requirements of the directives:

2014/35/EU Directive of the European Parliament and of the Council on the harmonisation of the laws of the Member States relating to the making available on the market of electrical equipment designed for use within certain voltage limits

2014/30/EU Directive of the European Parliament and of the Council on the harmonisation of the laws of the Member States relating to electromagnetic compatibility

Based on the following specifications applied:

EN IEC 61800-3:2018
EN 61800-5-1:2007+A1:2017+A11:2021

and therefore complies with the essential requirements and provisions of the 2014/35/CE and 2014/30/CE Directives.

Place: **Cheonan, Chungnam, Korea**

박 창 근 2022. 8. 16 (Signature / Date)

Mr. PARK CHANGKEUN / Manager

EMI / RFI POWER LINE FILTERS

LS ELECTRIC inverters, iS7 series

vector motor control

RFI FILTERS

THE LS RANGE OF POWER LINE FILTERS **FEP (Standard)** SERIES, HAVE BEEN SPECIFICALLY DESIGNED WITH HIGH FREQUENCY **LSELECTRIC INVERTERS.** THE USE OF LS FILTERS, WITH THE INSTALLATION ADVICE OVERLEAF HELP TO ENSURE TROUBLE FREE USE ALONG SIDE SENSITIVE DEVICES AND COMPLIANCE TO CONDUCTED EMISSION AND IMMUNITY STANDARDS TO EN 50081.

CAUTION

IN CASE OF A LEAKAGE CURRENT PROTECTIVE DEVICES IS USED ON POWER SUPPLY, IT MAY BE FAULT AT POWER-ON OR OFF.
IN AVOID THIS CASE, THE SENSE CURRENT OF PROTECTIVE DEVICE SHOULD BE LARGER

RECOMMENDED INSTALLATION INSTRUCTIONS

To conform to the EMC directive, it is necessary that these instructions be followed as closely as possible. Follow the usual safety procedures when working with electrical equipment.All electrical connections to the filter, inverter and motor must be made by a qualified electrical technician.

1-) Check the filter rating label to ensure that the current, voltage rating and part number are correct.

2-) For best results the filter should be fitted as closely as possible to the incoming mains supply of the wiring enclousure, usually directly after the enclousures circuit breaker or supply switch.

3-) The back panel of the wiring cabinet of board should be prepared for the mounting dimensions of the filter. Care should be taken to remove any paint etc... from the mounting holes and face area of the panel to ensure the best possible earthing of the filter.

4-) Mount the filter securely.

5-) Connect the mains supply to the filter terminals marked LINE, connect any earth cables to the earth stud provided. Connect the filter terminals marked LOAD to the mains input of the inverter using short lengths of appropriate gauge cable.

6-) Connect the motor and fit the ferrite core (output chokes) as close to the inverter as possible. Armoured or screened cable should be used with the 3 phase conductors only threaded twice through the center of the ferrite core. The earth conductor should be securely earthed at both inverter and motor ends. The screen should be connected to the enclousure body via and earthed cable gland.

7-) Connect any control cables as instructed in the inverter instructions manual.

IT IS IMPORTANT THAT ALL LEAD LENGHTS ARE KEPT AS SHORT AS POSSIBLE AND THAT INCOMING MAINS AND OUTGOINGMOTORCABLESARE KEPTWELLSEPARATED.

FE SERIES (Standard)

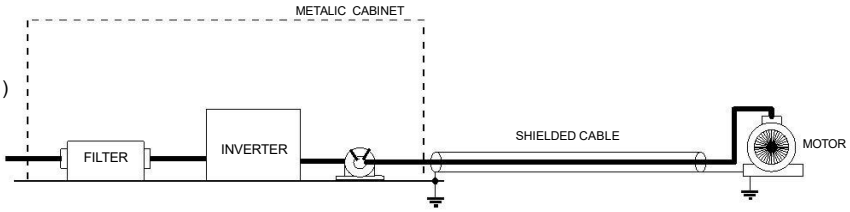

PR0062

iS7 series / Standard Filters											
INVERTER	POWER	CODE	CURRENT	VOLTAGE	LEAKAGE CURRENT	DIMENSIONS L W H	MOUNTING Y X	WEIGHT	MOUNT	FIG.	OUTPUT CHOKES
THREE PHASE											
SV0300iS7-2	30kW	FEP-T180	180A	220-480VAC	0.7mA 80mA	332 x 170 x 120	115 x 155	8.4 Kg	-	B	FS-3
SV0370iS7-2	37kW	FEP-T250	250A	220-480VAC	0.7mA 80mA	392 x 190 x 116	240 x 165	9.1 Kg	-	B	FS-3
SV0450iS7-2	45kW	FEP-T320	320A	220-480VAC	0.7mA 80mA	392 x 260 x 116	240 x 235	9.8 Kg	-	B	FS-4
SV0550iS7-2	55kW	FEP-T320	320A	220-480VAC	0.7mA 80mA	392 x 260 x 116	240 x 235	9.8 Kg	-	B	FS-4
SV0750iS7-2	75kW	FEP-T400	400A	220-480VAC	0.7mA 80mA	392 x 260 x 116	240 x 235	10.3 Kg	-	B	FS-4

SV0300~0750IS7 EN 55011 CLASS A GROUP 2 IEC/EN 61800-3 C3

iS7 series / Standard Filters											
INVERTER	POWER	CODE	CURRENT	VOLTAGE	LEAKAGE CURRENT	DIMENSIONS L W H	MOUNTING Y X	WEIGHT	MOUNT	FIG.	OUTPUT CHOKES
THREE PHASE											
SV0300iS7-4	30kW	FE-T100-2	100A	220-480VAC	1.3mA 150mA	420 x 200 x 130	408 x 166	13.8 Kg	-	A	FS-3
SV0370iS7-4	37kW	FE-T100-2	100A	220-480VAC	1.3mA 150mA	420 x 200 x 130	408 x 166	13.8 Kg	-	B	FS-3
SV0450iS7-4	45kW	FEP-T150	150A	220-480VAC	1.3mA 150mA	332 x 170 x 120	115 x 155	8 Kg	-	B	FS-3
SV0550iS7-4	55kW	FEP-T150	150A	220-480VAC	1.3mA 150mA	332 x 170 x 120	115 x 155	8 Kg	-	B	FS-3
SV0750iS7-4	75kW	FEP-T180	180A	220-480VAC	1.3mA 150mA	332 x 170 x 120	115 x 155	8.4 Kg	-	B	FS-3
SV0900iS7-4	90KW	FEP-T250	250A	220-480VAC	1.3mA 150mA	392 x 190 x 116	240 x 165	9.1 Kg	-	B	FS-4
SV1100iS7-4	110KW	FEP-T400	400A	220-480VAC	1.3mA 150mA	392 x 260 x 116	240 x 235	10.3 Kg	-	B	FS-4
SV1320iS7-4	132KW	FEP-T400	400A	220-480VAC	1.3mA 150mA	392 x 260 x 116	240 x 235	10.3 Kg	-	B	FS-4
SV1600iS7-4	160KW	FEP-T600	600A	220-480VAC	1.3mA 150mA	392 x 260 x 116	240 x 235	11 Kg	-	B	FS-4
SV1850iS7-4	185KW	FEP-T600	600A	220-480VAC	1.3mA 150mA	392 x 260 x 116	240 x 235	11 Kg	-	B	FS-4
SV2200iS7-4	220KW	FEP-T1000	1000A	220-480VAC	1.3mA 150mA	460 x 280 x 166	290 x 255	18 Kg	-	B	FS-4
SV2800iS7-4	280KW	FEP-T1000	1000A	220-480VAC	1.3mA 150mA	460 x 280 x 166	290 x 255	18 Kg	-	B	FS-4
SV3150iS7-4	315KW	FEP-T1000	1000A	220-480VAC	1.3mA 150mA	460 x 280 x 166	290 x 255	18 Kg	-	B	FS-4
SV3750iS7-4	375KW	FEP-T1600	1600A	220-480VAC	1.3mA 150mA	592 x 300 x 166	340 x 275	27 Kg	-	B	FS-4

SV0300~2200 iS7-4 EN 55011 CLASS A GROUP 2 IEC/EN 61800-3 C3

SV2800~3750 iS7-4 EN 55011 CLASS A IEC/EN 61800-3 C4

FE SERIES (Standard)

FIG.A

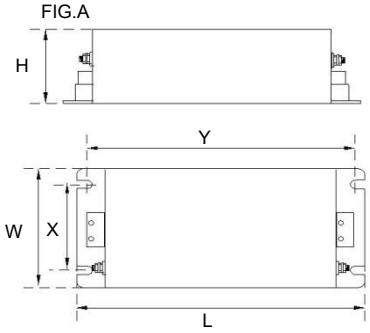

FIG.B

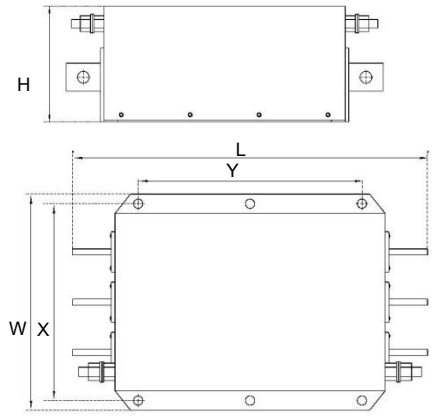

Vector Motor Control Ibérica S.L.
C/ Mar del Carib, 10
Pol. Ind. La Torre del Rector
08130 Santa Perpètua de Mogoda
(BARCELONA) ESPAÑA
Tel. (+34) 935 748 206
Fax (+34) 935 748 248
info@vmc.es www.vmc.es

FS SERIES (output chokes)

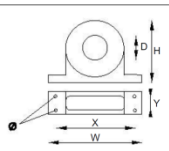

CODE	D	W	H	X	Ø
FS – 3	48	150	110	125 x 30	5
FS – 4	58	200	170	180 x 45	5

Product Warranty

Warranty Period

The warranty period for the purchased product is 24 months from the date of manufacture.

Warranty Coverage

1. The initial fault diagnosis should be conducted by the customer as a general principle.
   However, upon request, we or our service network can carry out this task for a fee.

   If the fault is found to be our responsibility, the service will be free of charge.

2. The warranty applies only when our products are used under normal conditions as specified in the handling instructions, user manual, catalog, and caution labels.
3. Even within the warranty period, the following cases will be subject to chargeable repairs:
   1) Replacement of consumables or lifespan parts (relays, fuses, electrolytic capacitors, batteries, fans, etc.)
   2) Failures or damage due to improper storage, handling, negligence, or accidents by the customer
   3) Failures due to the hardware or software design of the customer
   4) Failures due to modifications of the product without our consent

      (repairs or modifications recognized as done by others will also be refused, even if paid)
   5) Failures that could have been avoided if the customer's device, which incorporates our product, had been equipped with safety devices required by legal regulations or common industry practices.
   6) Failures that could have been prevented through proper maintenance and regular replacement of consumable parts as per the handling instructions and user manual
   7) Failures and damage caused by the use of inappropriate consumables or connected equipment
   8) Failures due to external factors, such as fire, abnormal voltage, and natural disasters like earthquakes, lightning, salt damage, and typhoons
   9) Failures due to reasons that could not have been foreseen with the scientific and technological standards at the time of our product shipment
   10) Other cases where the responsibility for failure, damage, or defect is acknowledged to lie with the customer

UL Mark

The UL mark applies to products in the United States and Canada. This mark indicates that UL has tested and evaluated the products and determined that the products satisfy the UL standards for product safety. If a product received UL certification, this means that all components inside the product had been certified for UL standards as well.

CE mark

The CE mark indicates that the products carrying this mark comply with European safety and environmental regulations. European standards include the Machinery Directive for machine manufacturers, the Low Voltage Directive for electronics manufacturers and the EMC guidelines for safe noise control.

Low Voltage Directive

We have confirmed that our products comply with the Low Voltage Directive (EN 61800-5-1).

EMC Directive

The Directive defines the requirements for immunity and emissions of electrical equipment used within the European Union. The EMC product standard (EN 61800-3) covers requirements stated for drives.

EAC mark

The EurAsian Conformity mark (EAC) indicates that the product conforms to all technical regulations of the Eurasian Customs Union assessment procedures. This means that it meets all requirements and technical regulations applicable to the product, and that it can be serviced in all service centers of the producer in the territory of all Customs Union member countries.

Index