Customer information packet

VFSWDM3554T-5E

1.5HP, 1770RPM, 3PH, 60HZ, 143TC, 3524M, TEFC
Class - None
Division - Not Applicable

Copyright © All product information within this document is subject to ABB Motors and Mechanical Inc. copyright © protection, unless otherwise noted.
4/7/2025 12:35:06 PM

Specifications

Enclosure	TEFC
Frame	143TC
Frame Material	Stainless Steel
Frequency	60.00 Hz
Haz Area Class and Group	None
Haz Area Division	Not Applicable
Motor Letter Type	Three Phase
Output @ Frequency	1.500 HP @ 60 HZ
Phase	3
Synchronous Speed @ Frequency	1800 RPM @ 60 HZ
Voltage @ Frequency	575.0 V @ 60 HZ
Agency Approvals	CSA EEV NEMA PREMIUM NEMA_PREMIUM UR
Ambient Temperature	40 °C
Auxillary Box	No Auxillary Box
Auxillary Box Lead Termination	None
Base Indicator	No Mounting
Bearing Grease Type	Polyrex EM (-20F +300F)
Blower	None
Current @ Voltage	1.750 A @ 575.0 V
Design Code	B
Drip Cover	No Drip Cover
Duty Rating	CONT
Efficiency @ 100% Load	86.5 %
Electrically Isolated Bearing	Not Electrically Isolated
Feedback Device	NO FEEDBACK
Front Shaft Indicator	None
Heater Indicator	No Heater
High Voltage Full Load Amps	1.8 a
Insulation Class	H

Part detail

Revision	D
Type	AC
Mech. spec.	35E4709
Base	
Status	PRD/A
Elec. spec.	35WGZ955
Layout	35LYE4709
Eff. date	08-14-2023
CD Diagram	CD0006
Poles	04
Leads	3#18
Proprietary	False
Created date	03-11-2022

Inverter Code	Inverter Ready
KVA Code	L
Lifting Lugs	No Lifting Lugs
Locked Bearing Indicator	Locked Bearing
Motor Finish	UNPAINTED
Motor Lead Quantity/Wire Size	3 @ 18 AWG
Motor Lead Termination	Flying Leads
Motor Standards	NEMA
Motor Type	3524M
Mounting Arrangement	F1
Number of Poles	4
Overall Length	14.03 IN
Power Factor	73
Product Family	WD All SD Non-Encapsulated
Pulley End Bearing Type	Sealed Bearing
Pulley Face Code	C-Face
Pulley Shaft Indicator	Standard
Rodent Screen	None
Service Factor	1.15
Shaft Diameter	0.875 IN
Shaft Ground Indicator	No Shaft Grounding
Shaft Rotation	Reversible
Shaft Slinger Indicator	No Slinger
Speed	1770 rpm
Speed Code	Single Speed
Starting Method	Direct on line
Thermal Device - Bearing	None
Thermal Device - Winding	None
Vibration Sensor Indicator	No Vibration Sensor
Winding Thermal 1	None
Winding Thermal 2	None

Nameplate

NP4427AAA02

CAT #	VFSWDM3554T-5E				**LBS**							
SPEC	35E4709Z955G1				**ENCL**	TEFC						
SER #					**CC**	010A	**IP**	69				
HP	1.5			**MAG CUR**	1.1							
VOLTS	575						**NEMA NOM. EFF**	86.5				
AMPS	1.75					**PF**	73					
RATING	40C AMB-CONT											
RPM	1770				**MAX RPM**	2700						
FRAME	143TC	**HZ**	60	**CODE**	L	**CLASS**	H					
SER.F.	1.15	**SF AMP**	1.9		**PH**	3	**DES**	B				
DE	6205		**ODE**	6205								
LUBRICATION	POLYREX EM											
ID LOGO		**INVERTER TYPE**		**VPWM**	**CHP**	60	**TO**	90	1.5:1			
ID LOGO	**WK2**	0.189	**CT**	15	**TO**	60	4:1					
ID LOGO	**SL HZ**	1	**VT**	3	**TO**	60	20:1					
									QR			
YR												

AC Induction Motor Performance Data
Record # 91710
Typical performance - not guaranteed values

Winding: 35WGZ955-R001	**Type:** 3524M	**Enclosure:** TEFC

Nameplate Data				**575 V, 60 Hz: Single Voltage Motor**	
Rated Output (HP)			1.5	**Full Load Torque**	4.47 LB-FT
Volts			575	**Start Configuration**	direct on line
Full Load Amps			1.7	**Breakdown Torque**	18.3 LB-FT
R.P.M.			1770	**Pull-up Torque**	9.2 LB-FT
Hz	60	**Phase**	3	**Locked-rotor Torque**	12.1 LB-FT
NEMA Design Code	B	**KVA Code**	L	**Starting Current**	15.2 A
Service Factor (S.F.)			1.15	**No-load Current**	1.11 A
NEMA Nom. Eff.	86.5	**Power Factor**	76	**Line-line Res. @ 25ºC**	18.8 Ω
Rating - Duty			40C AMB-CONT	**Temp. Rise @ Rated Load**	47°C
S.F. Amps			1.85	**Temp. Rise @ S.F. Load**	55°C
				Locked-rotor Power Factor	57.6
				Rotor inertia	0.188 lb-ft²

Load Characteristics 575 V, 60 Hz, 1.5 HP

% of Rated Load	**25**	**50**	**75**	**100**	**125**	**150**	**S.F.**
Power Factor	33	52	65	74	79	83	80
Efficiency	76.4	84.4	86.6	86.8	86.2	84.9	85.5
Speed	1792	1785	1777	1768	1760	1750	1759
Line amperes	1.15	1.29	1.51	1.76	2.06	2.41	1.9

ABB Motors and Mechanical Inc.

WINDING # 35WGZ955

1.5 HP 3 PH 60 HZ 1770 RPM 575 V 3524M

Typical performance - not guaranteed values.

TORQUES(LB-FT): PO=18.3 PU=9.2 LR=12.1 LRA=15.2

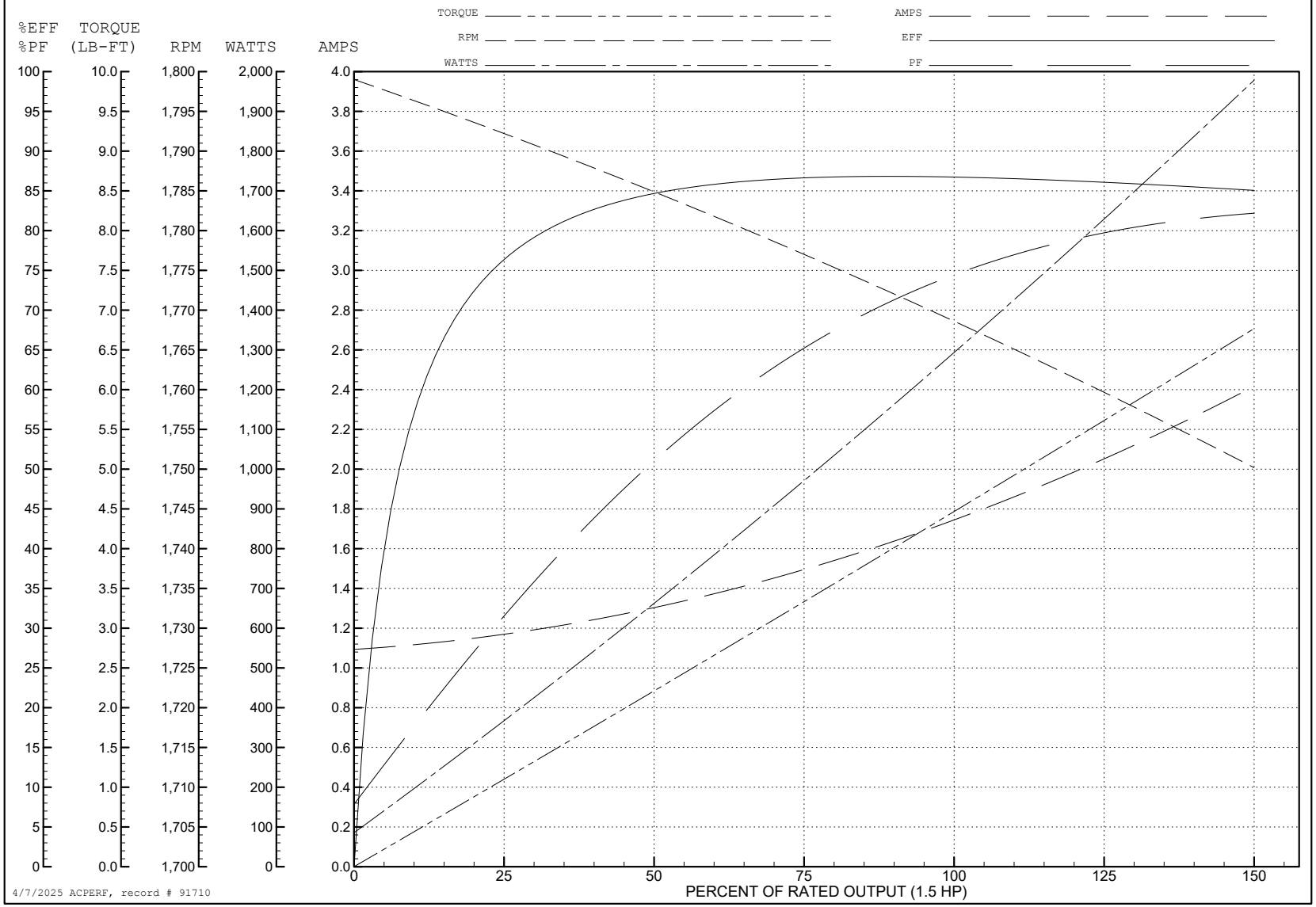

4/7/2025 ACPERF, record # 91710

35LYE4709

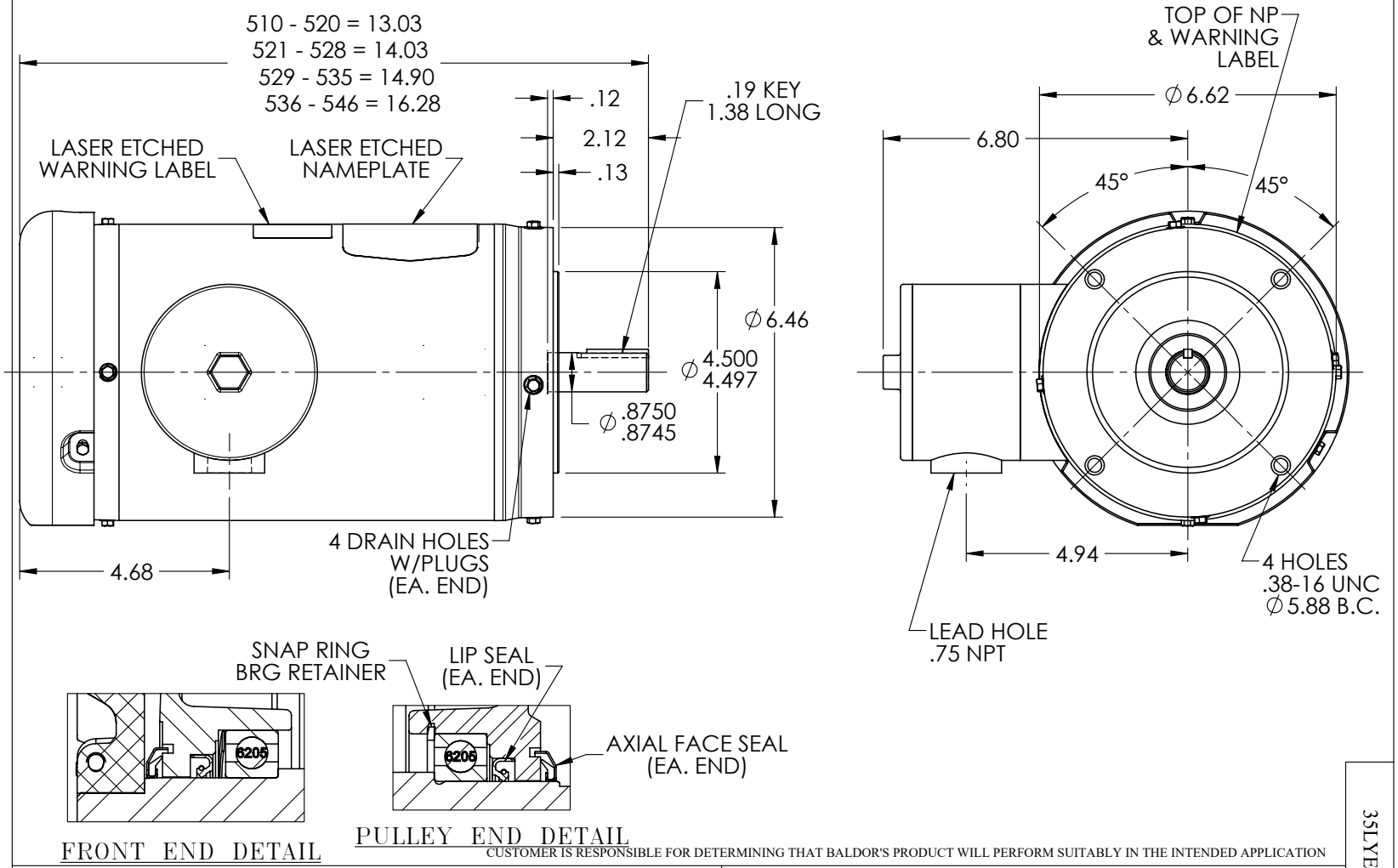

CUSTOMER IS RESPONSIBLE FOR DETERMINING THAT BALDOR'S PRODUCT WILL PERFORM SUITABLY IN THE INTENDED APPLICATION

REV. DESC: REMOVE FACE DRAINS & DRAIN FTG; ADD DRAIN PLUG			
REV: C	VERSION: 03	REVISED: 03:17:32 01/26/2023	TDR: 000001202627
35LYE4709	MODEL NO. 35LYE4709		REF: -
	BY: ENSTEK0		

BALDOR

STD VER 143-5TC TEFC 35M WD11/12

35LYE4709

CD0006

TYPICAL WYE–CONNECTED MOTOR

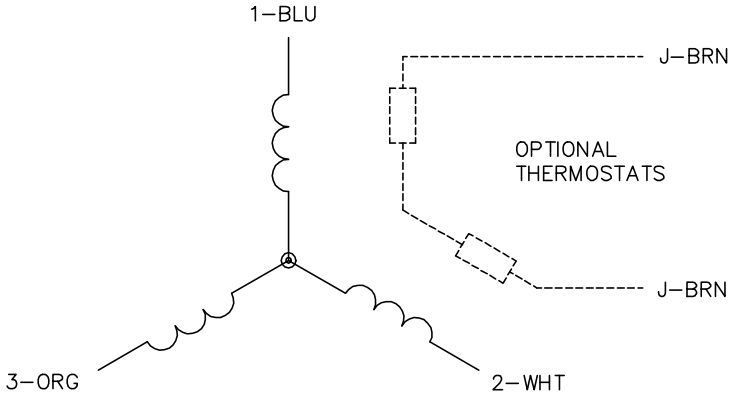

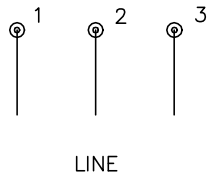

TYPICAL DELTA–CONNECTED MOTOR

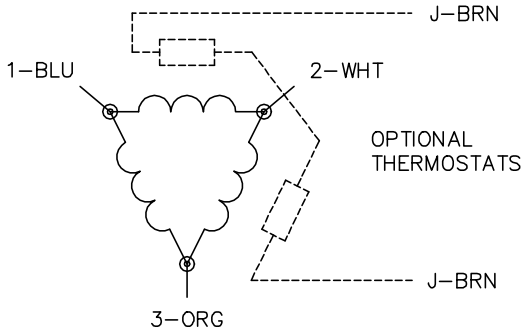

NOTES:

1. THREE LEAD MOTOR MAY BE EITHER WYE CONNECTED OR DELTA CONNECTED.
2. INTERCHANGE ANY TWO LINE LEADS TO REVERSE ROTATION.
3. OPTIONAL THERMOSTATS ARE PROVIDED WHEN SPECIFIED.
4. ACTUAL NUMBER OF INTERNAL PARALLEL CIRCUITS MAY VARY.
5. LEAD COLORS ARE OPTIONAL. LEADS MUST BE NUMBERED AS SHOWN.

CD0006

REV. DESC: ADD CLASS CONN00000007		
REV. LTR: E	VERSION: 01	TDR: 000001099922
FILE: \AAA\00005\141	REVISED: 10:24:49 02/19/2019	BY: ENBRIR0
MTL: –		

BALDOR - RELIANCE®

3PH, SV, 3 LEADS, WYE OR DELTA CONNECTED

SH 1 of 1