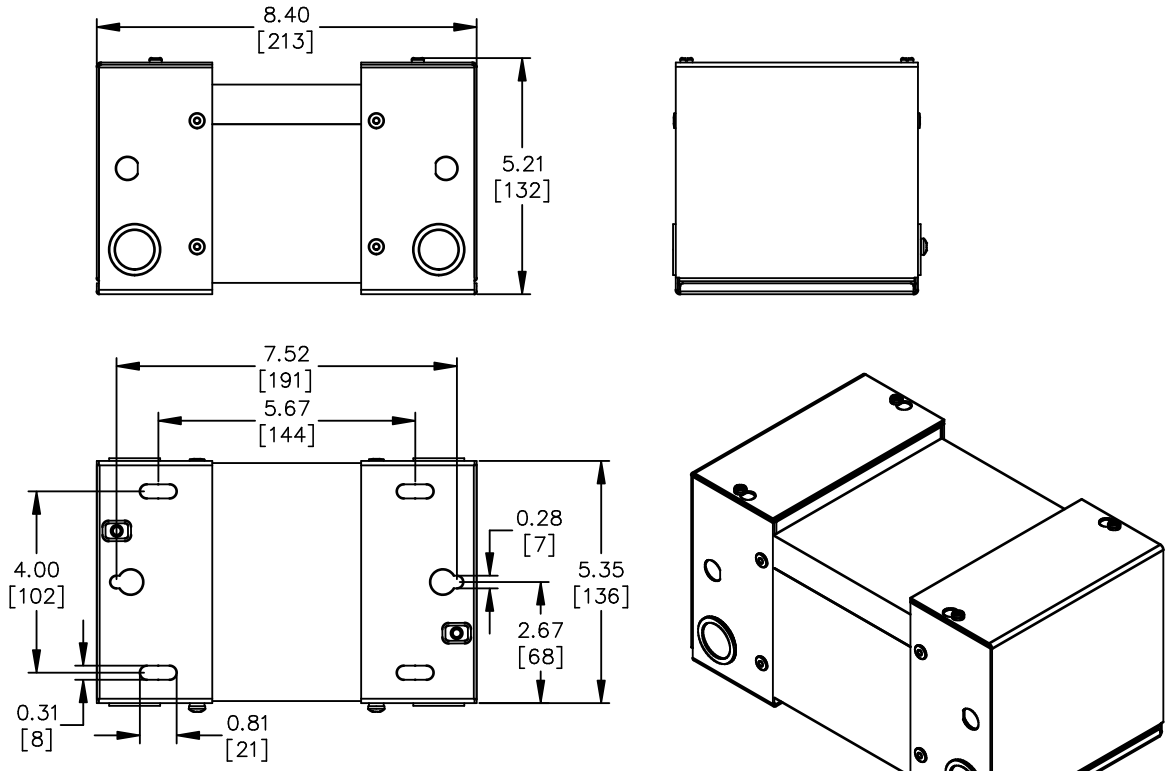

-OPTIONAL FUSE HOLDER KIT WILL ADD 0.71[18] TO WIDTH
-TOLERANCES STD. +/-0.1[+/-3mm]
-ALL DIMENSIONS ARE IN INCHES[mm]

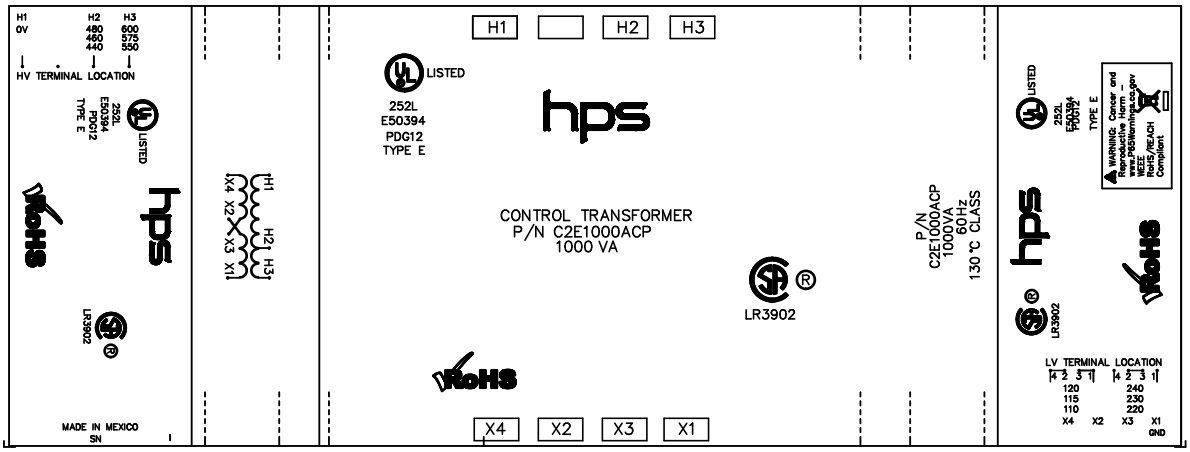

NOTES:

THIS DRAWING CONTAINS STRICKLY CONFIDENTIAL INFORMATION BELONGING TO HAMMOND POWER SOLUTIONS AND MUST NOT BE DISTRIBUTED OUTSIDE AUTHORIZED PARTIES.

hammond POWER SOLUTIONS

TITLE: 1 PHASE ENCLOSED CONTROL TFX

NO.	DATE	BY	REVISION
3	26/01/30	RH	UPDATED EDB
2	25/12/17	RH	UPDATED EDB

DES: MSARAF
DATE: 25/06/14
SCALE: NTS

SHEET 1 OF 1

EDBC2E1000ACP

3.0 jwen 2026/01/30 12:41