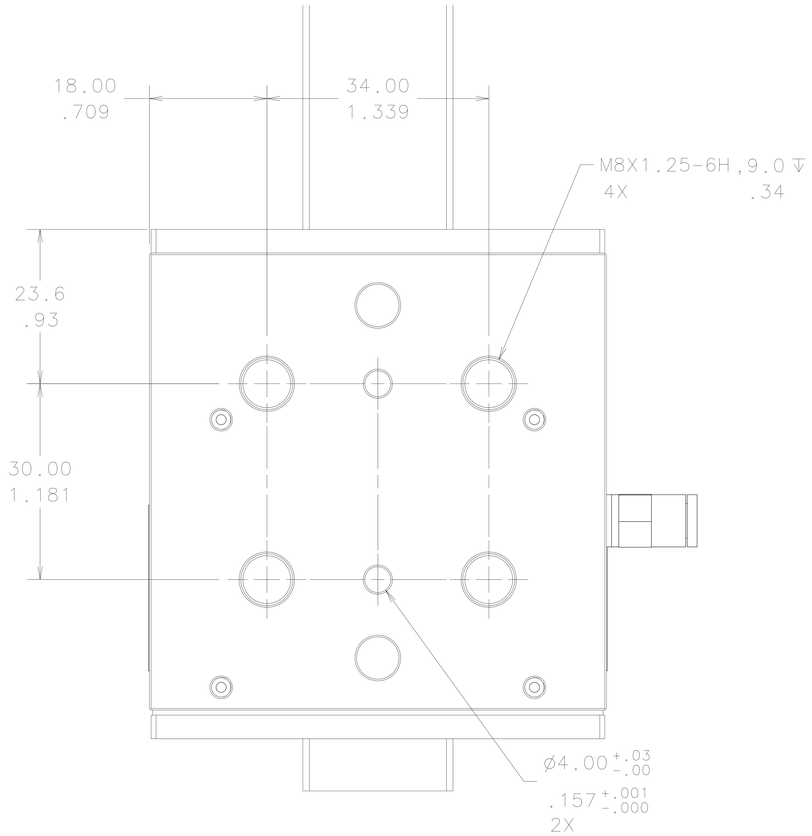

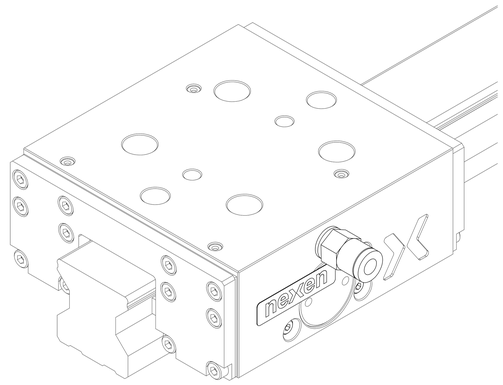

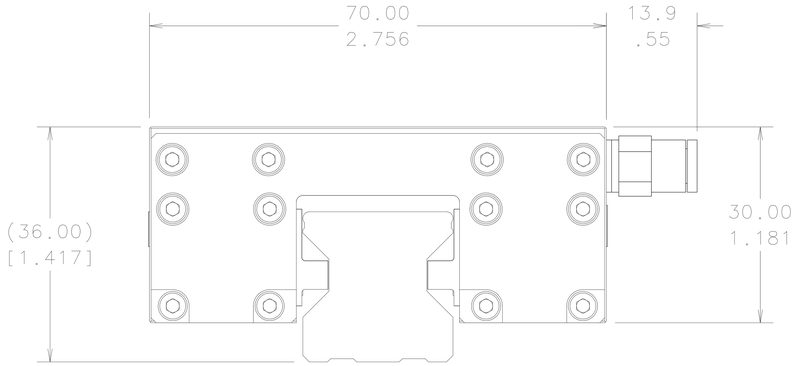

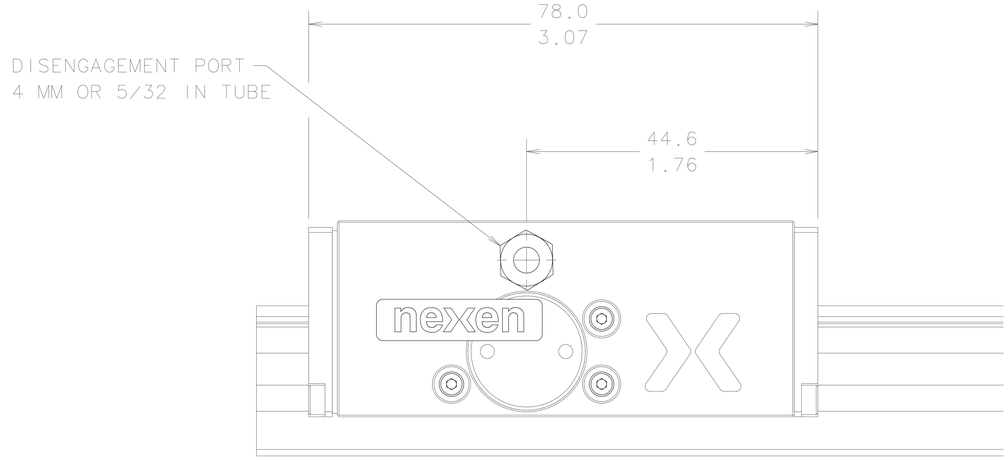

C-960126S

GEOMETRIC TOLERANCE VALUES	
MM	INCH
.013	.0005
.03	.001
.05	.002
.08	.003
.13	.005
.20	.008
.25	.010
.38	.015

THIRD ANGLE PROJECTION

SURFACE ROUGHNESS VALUES	
µm	µin
6.3	250
3.2	125
1.6	63
0.8	32
0.4	16
0.2	8

UNLESS OTHERWISE SPECIFIED

1. SURFACE TEXTURE: √
2. METRIC TOLERANCES: X ±0.8; .X ±0.5; .XX ±0.13
   INCH TOLERANCES: .XX ±.02; .XXX ±.005
3. ANGLES ±.5°
4. PRIMARY DIMENSIONS ARE IN MM
   SECONDARY DIMENSIONS ARE IN INCHES
5. REMOVE ALL BURRS AND SHARP EDGES
6. DO NOT SCALE DWG - WORK TO DIMS
7. PART MUST CONFORM TO ENGINEERING STANDARD WORK INSTRUCTIONS

nexen® Nexen Group, Inc.

TITLE GENERAL DIMENSIONS

MODEL RB25-S/P-S-THK-SRG

MATL			C	17665	10-16-06
MATL #			REV	ECO	ERO	DATE
DWN	JEH	DATE 02-01-05	SCALE:NONE X	WAS C-960126S-B	
CHKD	CDV	DATE 02-01-05	SHEET 1 OF 1		REV
APVD	JMM	DATE 02-01-05	C-960126S		C