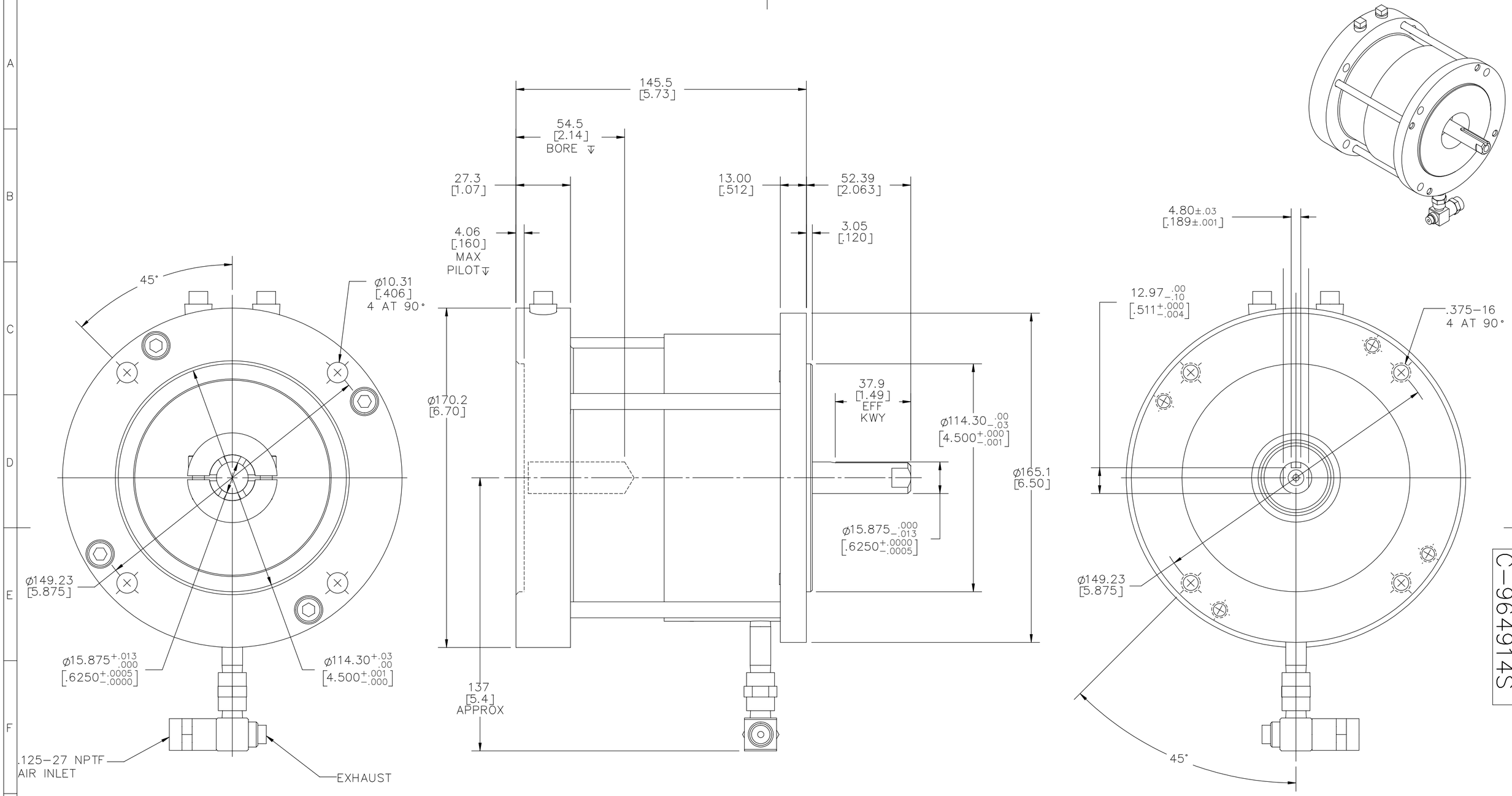

C-964914S

GEOMETRIC TOLERANCE VALUES	
MM	INCH
.013	.0005
.03	.001
.05	.002
.08	.003
.13	.005
.20	.008
.25	.010
.38	.015

THIRD ANGLE PROJECTION

SURFACE ROUGHNESS VALUES	
µm	µin
6.3	250
3.2	125
1.6	63
0.8	32
0.4	16
0.2	8

UNLESS OTHERWISE SPECIFIED

1. METRIC TOLERANCES: X ±0.8; .X ±0.5; .XX ±0.13
   INCH TOLERANCES: .XX ±.02; .XXX ±.005
2. ANGLES ±.5°
3. PRIMARY DIMENSIONS ARE IN MM
   SECONDARY DIMENSIONS ARE IN INCHES
4. DO NOT SCALE DWG – WORK TO DIMS
5. PRODUCT MUST CONFORM TO ENGINEERING STANDARD WORK INSTRUCTIONS

nexen® Nexen Group, Inc.

TITLE GENERAL DIMENSIONS

MODEL EMB-625-NEMA 56C

ERO	ECO	DATE
42413	19837	4/27/2012

DWN	CDV	DATE	4/27/2012	SCALE: 3:4 [X]	SHEET 1 OF 1
CHKD	TGH	DATE	4/27/2012	C-964914S	REV D
APVD	CDV	DATE	4/27/2012		