BALDOR
A MEMBER OF THE ABB GROUP

BALDOR • RELIANCE

Product Information Packet

AEM3683-4

1HP,1750RPM,3PH,60HZ,182,0617M,TENV,F1

Copyright © All product information within this document is subject to Baldor Electric Company copyright © protection, unless otherwise noted.

Part Detail

Revision:	V	**Status:**	PRD/A	**Change #:**		**Proprietary:**	No
Type:	AC	**Prod. Type:**	0617M	**Elec. Spec:**	06WGW405	**CD Diagram:**	CD0006
Enclosure:	TENV	**Mfg Plant:**		**Mech. Spec:**	06H063	**Layout:**	06LYH063
Frame:	182	**Mounting:**	F1	**Poles:**	04	**Created Date:**	
Base:	RG	**Rotation:**	R	**Insulation:**	F	**Eff. Date:**	06-23-2014
Leads:	3#16					**Replaced By:**	
Literature:		**Elec. Diagram:**					

BALDOR
A MEMBER OF THE ABB GROUP

Nameplate NP1404E							
CAT.NO.	AEM3683-4						
SPEC.	06H063W405						
VOLTS	460						
AMP	1.5						
RPM	1750	HP	1				
FRAME	182	HZ	60	PH	3		
SER.F.	1.00	CODE	M	DES	B	CL	F
NEMA-NOM-EFF	84	PF	75				
G.MIN.EFF	81.5	CC					
RATING	65C AMB-CONT						
LUBRICATION	POLYREX EM						
DE	6206	ODE	6205				
ENCL	TENV	SER. #					

BALDOR A MEMBER OF THE ABB GROUP

Parts List

Part Number	Description	Quantity
SA020382	SA 06H063W405	1.000 EA
RA016435	RA 06H063W405	1.000 EA
HW3201A05	3/8-16 EYEBOLT	1.000 EA
06CB1000A02	CONDUIT BOX, MACH, W/.75 PIPE TAP & #18	1.000 EA
06GS1007	GASKET, CONDUIT BOX	1.000 EA
51XW2520A12	SCREW, HEX SER SLT HD, ZN, 1/4-20 X .75	2.000 EA
11XW1032G06	10-32 X .38, TAPTITE II, HEX WSHR SLTD U	1.000 EA
HW3001B01	003SS CUP WASHER, FOR #8 SCREW	1.000 EA
36EP1101A50	FR ENDPLATE MACH, TENV	1.000 EA
HW4500A19	1/4-28X1/4 SLOTTED PLUG F/S	2.000 EA
HA4054	SHORT T-DRAIN FITTING, .125" N.P.T.	1.000 EA
HW5100A05	WVY WSHR F/205 & 304 BRGS	1.000 EA
36EP1100A21	PU ENDPLATE MACH	1.000 EA
HW4500A19	1/4-28X1/4 SLOTTED PLUG F/S	2.000 EA
HW4500A20	1/8NPT SL PIPE PLUG	1.000 EA
HA3101A34	THRUBOLT- 1/4-20 X 10.375	4.000 EA
XY2520A12	1/4-20 HEX NUT, DIRECTIONAL SERRATIONS	4.000 EA
06CB1500A01	CONDUIT BOX LID, MACH	1.000 EA
06GS1003	GASKET, KOBX LID, 1/8" THICK BLACK NEOPR	1.000 EA
10XN2520A12	O1/4-20X 3/4 HEX HEAD CAP	2.000 EA
HW1001A25	LOCKWASHER 1/4, ZINC PLT .493 OD, .255 I	2.000 EA
HA1005A22	SLINGER, OD 2.00, ID 1.14, 206 BRG, GM	1.000 EA
MJ5001A27	32220KN GRAY SEALER	0.001 QT
HW2501D13SP	KEY, 3/16 SQ X 1.375	1.000 EA

BALDOR
A MEMBER OF THE ABB GROUP

Parts List (continued)

Part Number	Description	Quantity
HA7000A01	KEY RETAINER 7/8" DIA SHAFT	1.000 EA
85XU0407S04	4X1/4 U DRIVE PIN STAINLESS	2.000 EA
LB1115N	LABEL,LIFTING DEVICE (ON ROLLS)	1.000 EA
WD1000B03	BURNDY YAV14 TERML (1M/PK)	3.000 EA
MJ1000A75	GREASE, POLYREX EM EXXON (USe 4824-15A)	0.050 LB
MG1025G02	PAINT, 782-02 WILKOFAST LIGHT GREY EPOXY	0.028 GA
LB1119N	WARNING LABEL	1.000 EA
LB1125C01	STD (STOCK) CARTON LABEL BALDOR WITH FLA	1.000 EA
NP1404E	SS UL CSA CC "AUTOMOTIVE"	1.000 EA
LC0006	CONNECTION LABEL	1.000 EA
36PA1001	PACKAGING GROUP	1.000 EA
LB1506	LABEL "AMERICAN MADE" 1.50 X 1.00	1.000 EA
MN416A01	TAG-INSTAL-MAINT no wire (1200/bx) 10/13	1.000 EA

BALDOR
A MEMBER OF THE ABB GROUP

Accessories

Part Number	Description	Multiplier
36-3301	C FACE KIT	A8

BALDOR
A MEMBER OF THE ABB GROUP

AC Induction Motor Performance Data

Record # 461 - Typical performance - not guaranteed values

Winding: 06WGW405-R001	**Type:** 0617M	**Enclosure:** TENV

Nameplate Data				460 V, 60 Hz: Single Voltage Motor	
Rated Output (HP)	1			Full Load Torque	2.95 LB-FT
Volts	460			Start Configuration	direct on line
Full Load Amps	1.5			Breakdown Torque	14.6 LB-FT
R.P.M.	1750			Pull-up Torque	8.14 LB-FT
Hz	60	Phase	3	Locked-rotor Torque	9.66 LB-FT
NEMA Design Code	B	KVA Code	M	Starting Current	13.9 A
Service Factor (S.F.)	1			No-load Current	0.88 A
NEMA Nom. Eff.	84	Power Factor	75	Line-line Res. @ 25ºC	12.1 Ω
Rating - Duty	65C AMB-CONT			Temp. Rise @ Rated Load	35°C
				Rotor inertia	0.159 LF²

Load Characteristics 460 V, 60 Hz, 1 HP

% of Rated Load	25	50	75	100	125	150
Power Factor	34	53	67	75	80	84
Efficiency	75.5	84	86.6	87	86.7	85.9
Speed	1791	1782	1771	1761	1750	1738
Line amperes	0.94	1.1	1.3	1.5	1.7	2

BALDOR
A MEMBER OF THE ABB GROUP

Performance Graph at 460V, 60Hz, 1.0HP Typical performance - Not guaranteed values

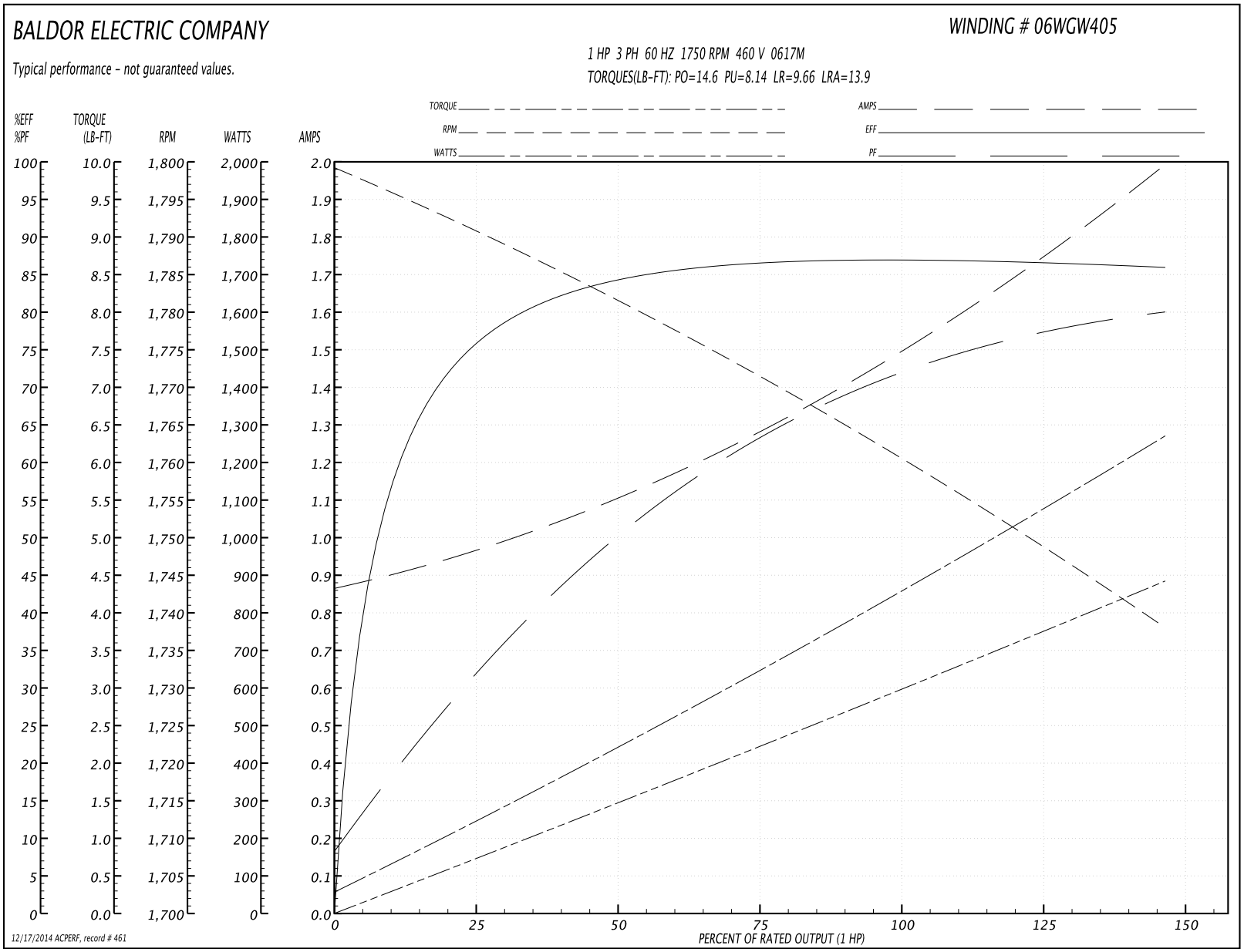

BALDOR
A MEMBER OF THE ABB GROUP

06LYH063

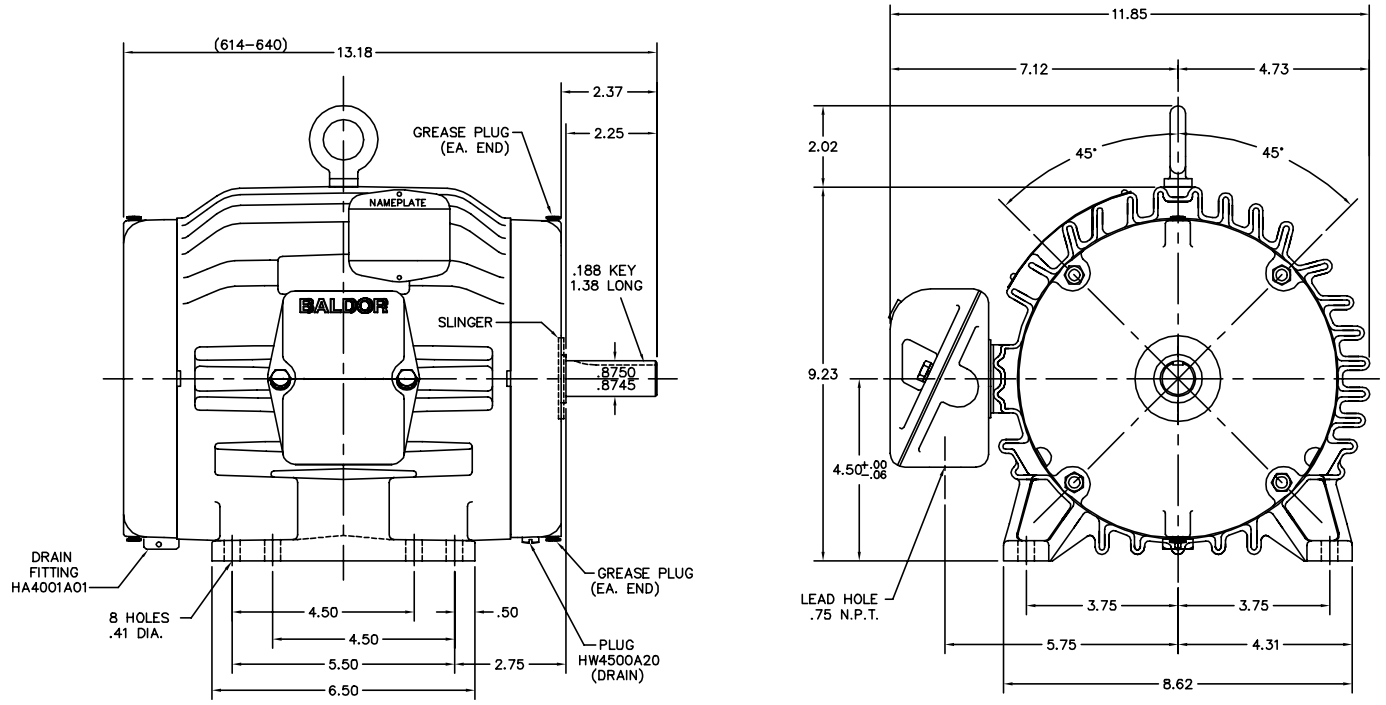

CUSTOMER IS RESPONSIBLE FOR DETERMINING THAT MOTOR PERFORMANCE IS SUITABLE IN THE APPLICATION.

REV. DESC: 06SF1107A01 WAS 06SF1107A12				BALDOR ELECTRIC Co.
REV. LTR: C	BY: RMP	REVISED: 11:39:38 01/21/2003	TDR: 291603	
FILE: AAA00007816			REF: 06LYH063	SPL 182–184 TENV HORZ 306M – GM SPEC
MTL: –				

06LYH063

BALDOR
A MEMBER OF THE ABB GROUP

CD0006

TYPICAL WYE–CONNECTED MOTOR

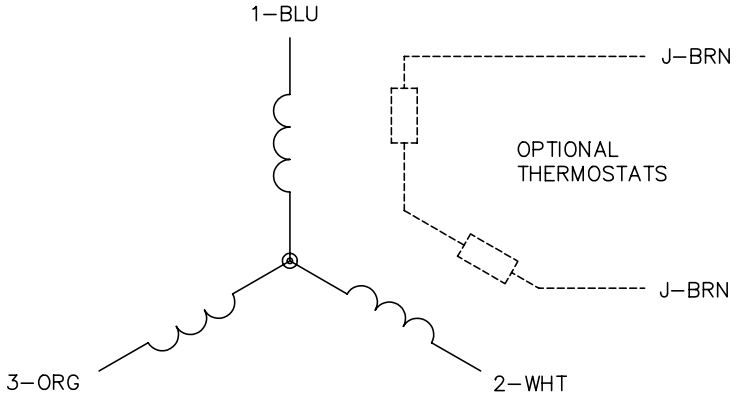

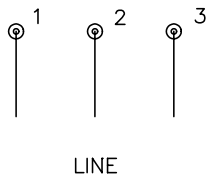

TYPICAL DELTA–CONNECTED MOTOR

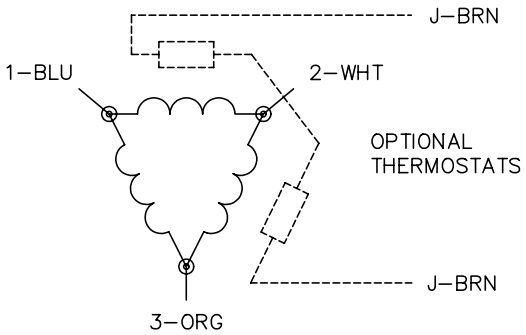

NOTES:

1. THREE LEAD MOTOR MAY BE EITHER WYE CONNECTED OR DELTA CONNECTED.
2. INTERCHANGE ANY TWO LINE LEADS TO REVERSE ROTATION.
3. OPTIONAL THERMOSTATS ARE PROVIDED WHEN SPECIFIED.
4. ACTUAL NUMBER OF INTERNAL PARALLEL CIRCUITS MAY VARY.
5. LEAD COLORS ARE OPTIONAL. LEADS MUST BE NUMBERED AS SHOWN.

REV. DESC: REVISE TO SHOW OPTIONAL COLORS			
REV. LTR: D	BY: JLP	REVISED: 01/21/99 4:02	TDR: 0171435
CD0006		FILE: AAA00005141	MDL: –
		MTL: –	

BALDOR ELECTRIC Co.

3PH, SV, 3 LEADS, WYE OR DELTA CONNECTED

CD0006

BALDOR
A MEMBER OF THE ABB GROUP