BALDOR
A MEMBER OF THE ABB GROUP

BALDOR • RELIANCE

Product Information Packet

AEM3686-4

1.5HP,1750RPM,3PH,60HZ,184,0623M,TEFC,F1

Copyright © All product information within this document is subject to Baldor Electric Company copyright © protection, unless otherwise noted.

Part Detail							
Revision:	AA	**Status:**	PRD/A	**Change #:**		**Proprietary:**	No
Type:	AC	**Prod. Type:**	0623M	**Elec. Spec:**	06WGW402	**CD Diagram:**	CD0006
Enclosure:	TEFC	**Mfg Plant:**		**Mech. Spec:**	06F062	**Layout:**	06LYF062
Frame:	184	**Mounting:**	F1	**Poles:**	04	**Created Date:**	
Base:	RG	**Rotation:**	R	**Insulation:**	F	**Eff. Date:**	06-23-2014
Leads:	3#16					**Replaced By:**	
Literature:		**Elec. Diagram:**					

BALDOR A MEMBER OF THE ABB GROUP

Nameplate NP1404E							
CAT.NO.	AEM3686-4						
SPEC.	06F062W402						
VOLTS	460						
AMP	2.2						
RPM	1750	HP	1.5				
FRAME	184	HZ	60	PH	3		
SER.F.	1.00	CODE	M	DES	B	CL	F
NEMA-NOM-EFF	85	PF	77				
G.MIN.EFF	82	CC					
RATING	65C AMB-CONT						
LUBRICATION	POLYREX EM						
DE	6206	ODE	6205				
ENCL	TEFC	SER. #					

BALDOR A MEMBER OF THE ABB GROUP

Parts List

Part Number	Description	Quantity
SA019848	SA 06F062W402	1.000 EA
RA015901	RA 06F062W402	1.000 EA
HW3201A05	3/8-16 EYEBOLT	1.000 EA
06CB1000A02	CONDUIT BOX, MACH, W/.75 PIPE TAP & #18	1.000 EA
RM1016	LEAD SEPARATOR GASKET - 305/306 C.P.MOTO	1.000 EA
51XW2520A12	SCREW, HEX SER SLT HD, ZN, 1/4-20 X .75	2.000 EA
11XW1032G06	10-32 X .38, TAPTITE II, HEX WSHR SLTD U	1.000 EA
HW3001B01	003SS CUP WASHER, FOR #8 SCREW	1.000 EA
36EP1101A51	FR ENDPLATE MACH, TEFC	1.000 EA
HW4500A19	1/4-28X1/4 SLOTTED PLUG F/S	2.000 EA
HA4054	SHORT T-DRAIN FITTING, .125" N.P.T.	1.000 EA
HW5100A05	WVY WSHR F/205 & 304 BRGS	1.000 EA
36EP1100A21	PU ENDPLATE MACH	1.000 EA
HW4500A19	1/4-28X1/4 SLOTTED PLUG F/S	2.000 EA
HA3101A34	THRUBOLT- 1/4-20 X 10.375	4.000 EA
XY2520A12	1/4-20 HEX NUT, DIRECTIONAL SERRATIONS	4.000 EA
36FH4009A31	IEC FH W/GREASER & SPL NOTCH, W/ AUTOPHE	1.000 EA
51XW1032A06	10-32 X .38, TAPTITE II, HEX WSHR SLTD S	3.000 EA
06CB1500A01	CONDUIT BOX LID, MACH	1.000 EA
06GS1003	GASKET, KOBX LID, 1/8" THICK BLACK NEOPR	1.000 EA
10XN2520A12	O1/4-20X 3/4 HEX HEAD CAP	2.000 EA
HW1001A25	LOCKWASHER 1/4, ZINC PLT .493 OD, .255 I	2.000 EA
HA1005A22	SLINGER, OD 2.00, ID 1.14, 206 BRG, GM	1.000 EA
HA1005A03SP	SLINGER, OD 1.750, ID .938, 205 BRG	1.000 EA

BALDOR
A MEMBER OF THE ABB GROUP

Parts List (continued)

Part Number	Description	Quantity
MJ5001A27	32220KN GRAY SEALER	0.001 QT
MJ5001A02	732 CL SEALANT 3 OZ DIXIE BEARING 289100	0.001 EA
MJ5001A14	DYNAPRO SEAL, CP MOTORS VC#2508050 (603	0.001 EA
HW2501D13SP	KEY, 3/16 SQ X 1.375	1.000 EA
HA7000A01	KEY RETAINER 7/8" DIA SHAFT	1.000 EA
85XU0407S04	4X1/4 U DRIVE PIN STAINLESS	2.000 EA
LB1115N	LABEL,LIFTING DEVICE (ON ROLLS)	1.000 EA
WD1000B03	BURNDY YAV14 TERML (1M/PK)	3.000 EA
MJ1000A75	GREASE, POLYREX EM EXXON (USe 4824-15A)	0.050 LB
HW4500A20	1/8NPT SL PIPE PLUG	1.000 EA
36FN3000A01SP	EXFN, PLASTIC, 7.00 OD, .912 ID	1.000 EA
51XB1214A16	12-14X1.00 HXWSSLD SERTYB	1.000 EA
MG1025G02	PAINT, 782-02 WILKOFAST LIGHT GREY EPOXY	0.028 GA
LB1119N	WARNING LABEL	1.000 EA
LB1125C01	STD (STOCK) CARTON LABEL BALDOR WITH FLA	1.000 EA
NP1404E	SS UL CSA CC "AUTOMOTIVE"	1.000 EA
LC0006	CONNECTION LABEL	1.000 EA
36PA1001	PACKAGING GROUP	1.000 EA
LB1506	LABEL "AMERICAN MADE" 1.50 X 1.00	1.000 EA
MN416A01	TAG-INSTAL-MAINT no wire (1200/bx) 10/13	1.000 EA

BALDOR
A MEMBER OF THE ABB GROUP

Accessories

Part Number	Description	Multiplier
36-1037	C FACE KIT	A8

BALDOR
A MEMBER OF THE ABB GROUP

AC Induction Motor Performance Data

Record # 457 - Typical performance - not guaranteed values

Winding: 06WGW402-R001	**Type:** 0623M	**Enclosure:** TEFC

Nameplate Data				460 V, 60 Hz: Single Voltage Motor	
Rated Output (HP)	1.5			Full Load Torque	4.48 LB-FT
Volts	460			Start Configuration	direct on line
Full Load Amps	2.2			Breakdown Torque	18.4 LB-FT
R.P.M.	1750			Pull-up Torque	10.8 LB-FT
Hz	60	Phase	3	Locked-rotor Torque	14.1 LB-FT
NEMA Design Code	B	KVA Code	M	Starting Current	19.4 A
Service Factor (S.F.)	1			No-load Current	1.14 A
NEMA Nom. Eff.	85	Power Factor	77	Line-line Res. @ 25ºC	8.98 Ω
Rating - Duty	65C AMB-CONT			Temp. Rise @ Rated Load	24˚C
				Rotor inertia	0.216 LF²

Load Characteristics 460 V, 60 Hz, 1.5 HP

% of Rated Load	25	50	75	100	125	150
Power Factor	38	58	71	77	82	85
Efficiency	73.5	82.6	84.9	85.1	84.4	83.2
Speed	1790	1780	1769	1758	1745	1732
Line amperes	1.24	1.48	1.8	2.13	2.53	3

BALDOR A MEMBER OF THE ABB GROUP

Performance Graph at 460V, 60Hz, 1.5HP Typical performance - Not guaranteed values

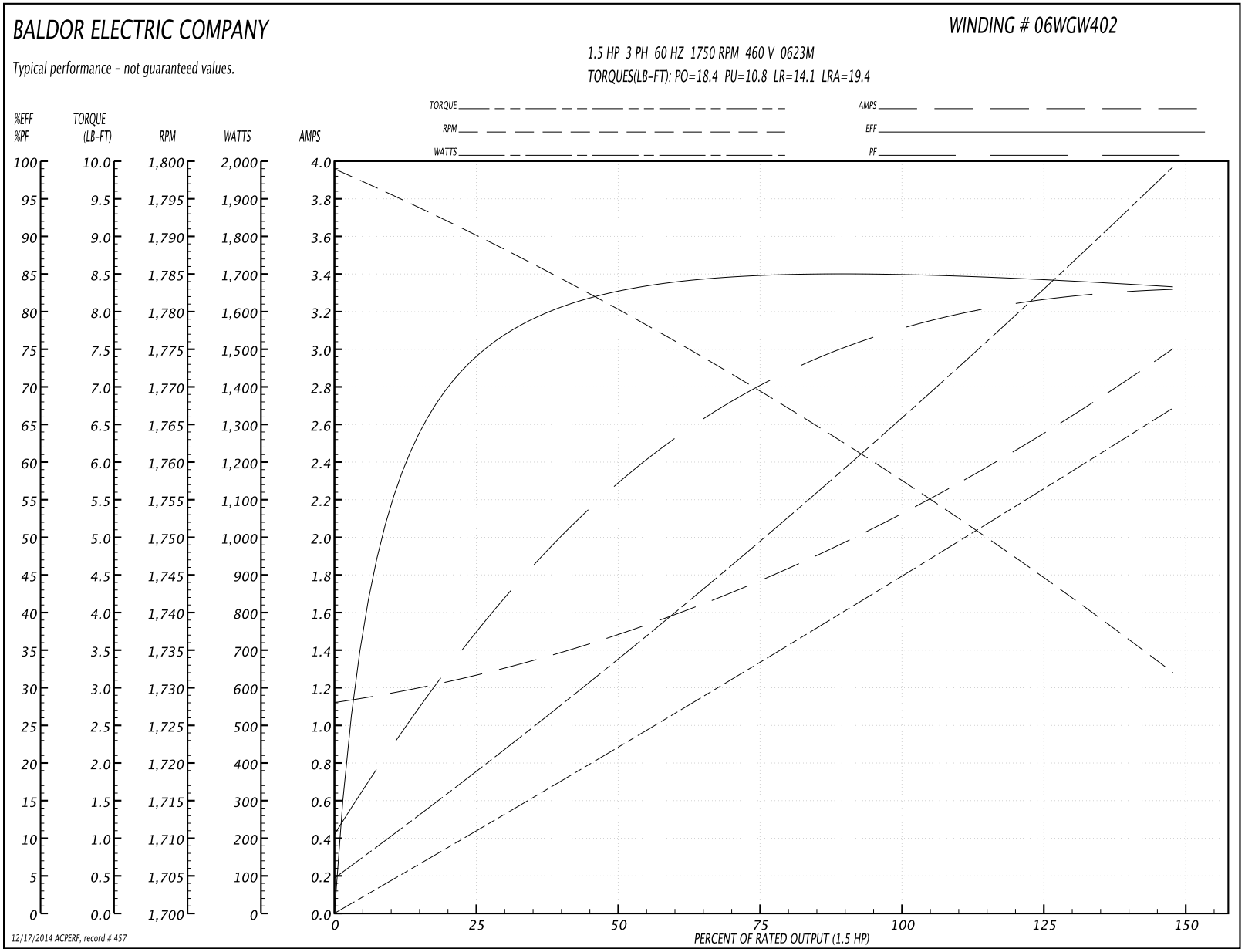

BALDOR
A MEMBER OF THE ABB GROUP

06LYF062

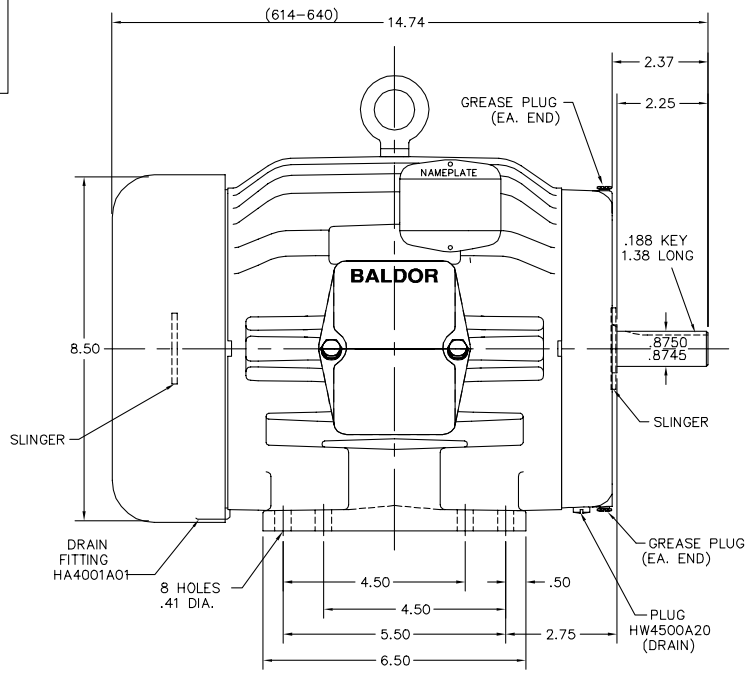

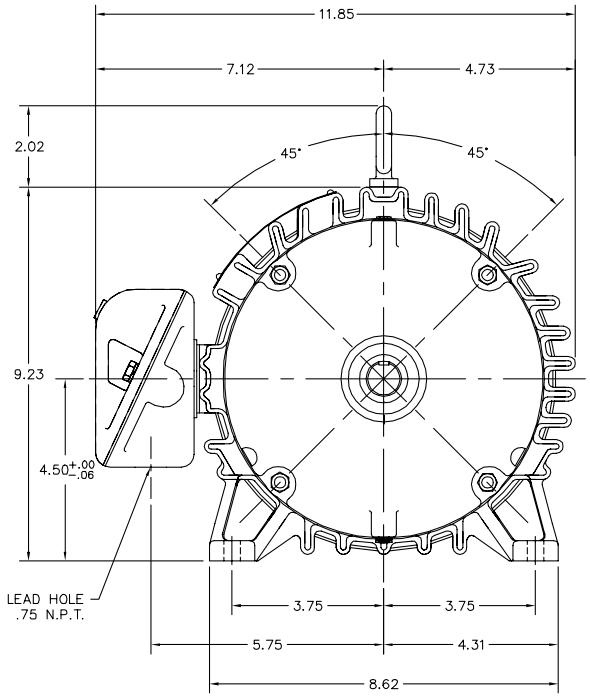

06LYF062

CUSTOMER IS RESPONSIBLE FOR DETERMINING THAT BALDOR'S PRODUCT WILL PERFORM SUITABLY IN THE INTENDED APPLICATION.

REV. DESC: ADD HA1005A03 TO FR END OF MOTOR		
REV. LTR: E	VERSION: 01	TDR: 000000466093
FILE: \AAA\00008\084	REVISED: 16:05:21 05/29/2008	BY: ENJASF0
MTL: –		

BALDOR • DODGE • RELIANCE

SPL 182–184 TEFC HORZ 306M – GM SPEC

SH 1 of 1

BALDOR
A MEMBER OF THE ABB GROUP

CD0006

TYPICAL WYE–CONNECTED MOTOR

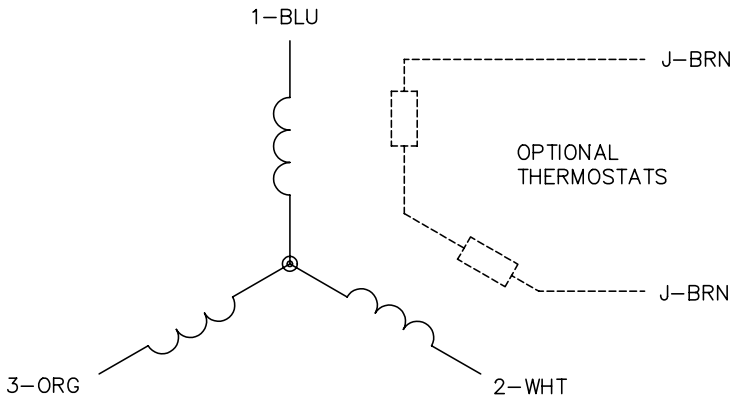

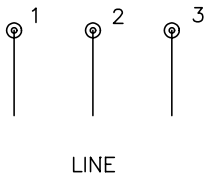

TYPICAL DELTA–CONNECTED MOTOR

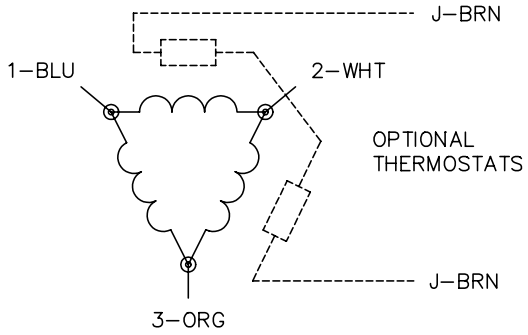

NOTES:

1. THREE LEAD MOTOR MAY BE EITHER WYE CONNECTED OR DELTA CONNECTED.
2. INTERCHANGE ANY TWO LINE LEADS TO REVERSE ROTATION.
3. OPTIONAL THERMOSTATS ARE PROVIDED WHEN SPECIFIED.
4. ACTUAL NUMBER OF INTERNAL PARALLEL CIRCUITS MAY VARY.
5. LEAD COLORS ARE OPTIONAL. LEADS MUST BE NUMBERED AS SHOWN.

REV. DESC: REVISE TO SHOW OPTIONAL COLORS			BALDOR ELECTRIC Co.
REV. LTR: D	BY: JLP	REVISED: 01/21/99 4:02	TDR: 0171435
9000CD		FILE: AAA00005141	MDL: –
		MTL: –	3PH, SV, 3 LEADS, WYE OR DELTA CONNECTED

CD0006

BALDOR A MEMBER OF THE ABB GROUP