BALDOR
A MEMBER OF THE ABB GROUP

BALDOR • RELIANCE

Product Information Packet

CDP3460

1HP,2500RPM,DC,56C,3428P,TEFC,F1

Copyright © All product information within this document is subject to Baldor Electric Company copyright © protection, unless otherwise noted.

Part Detail							
Revision:	W	**Status:**	PRD/A	**Change #:**		**Proprietary:**	No
Type:	DC	**Prod. Type:**		**Elec. Spec:**	34WG4103	**CD Diagram:**	CD0194
Enclosure:	TEFC	**Mfg Plant:**		**Mech. Spec:**	34-5990	**Layout:**	34LY5990
Frame:	56C	**Mounting:**	F1	**Poles:**	///	**Created Date:**	
Base:	RG	**Rotation:**	R	**Insulation:**	F	**Eff. Date:**	10-23-2013
Field Type:		**Literature:**		**Elec. Diagram:**		**Replaced By:**	

BALDOR A MEMBER OF THE ABB GROUP

Nameplate NP0891L					
CAT.NO.	CDP3460				
SPEC.	34-5990-4103				
HP	1	ENCL	TEFC		
RPM	2500				
FRAME	56C	TYPE	3428P		
ARM V	180	ARM A	4.85		
FLD V		FLD A			
INSUL	F	AMB.	40		
DUTY	CONT	SUPPLY	1.5		
BRG/DE	6203	BRG/ODE	6203		
BRUSHES	2/BP5000AW14				
		BLANK	IP44		
SER.					
BLANK					
APRV-CE	Y	APRV-CSA	Y	APRV-UL	Y

BALDOR A MEMBER OF THE ABB GROUP

Parts List

Part Number	Description	Quantity
SA005246	SA 34-5990-4103	1.000 EA
AA002895	AA 34-5990-4103	1.000 EA
BP5000AW14SP	CARBON BRUSH - 33P, 180 VOLTS	1.000 EA
HA3210B66	.125 DIA X .281 (AUTO)	2.000 EA
11XW1032G06	10-32 X .38, TAPTITE II, HEX WSHR SLTD U	1.000 EA
34EP3103B01	FR ENDPLATE, MACH	1.000 EA
WD4100A17	PLUG STIMPSON D4036	1.000 EA
HW5100A03SP	WAVY WASHER (W1543-017)	1.000 EA
34EP3300A29	PU ENDPLATE, MACH	1.000 EA
51XN1032A20	10-32 X 1 1/4 HX WS SL SR	2.000 EA
BP5201A11SP	BRUSH HOLDER ASSY W/BP4511A01 & BP3000A0	1.000 EA
80XN1032A03	10-32 X 3/16 SET SCREW	2.000 EA
34FN3002A01SP	EXTERNAL FAN, PLASTIC, .637/.639 HUB W/	1.000 EA
34FH5002A01SP	FAN COVER ASSY W/SHAFT COVER	1.000 EA
51XW1032A06	10-32 X .38, TAPTITE II, HEX WSHR SLTD S	3.000 EA
WD4102A01	SR-6L-1 HEYCO STRN RELIEF OR 23MPO6L10 M	1.000 EA
34CB4504SP	CONDUIT BOX LID, STAMPED	1.000 EA
34GS1011SP	GASKET, CONDUIT BOX LID	1.000 EA
51XW0832A07	8-32 X .44, TAPTITE II, HEX WSHR SLTD SE	2.000 EA
HW2501D13SP	KEY, 3/16 SQ X 1.375	1.000 EA
HA7000A04	KEY RETAINER 0.625 DIA SHAFTS	1.000 EA
HW3001B02	BRASS CUP WASHER W/GROUND SYMBOL TAB,	1.000 EA
MG1000G27	MED CHARCOAL METALLIC GREY	0.014 GA
MJ5004A70	603 LOCTITE LOCC	0.001 EA

BALDOR
A MEMBER OF THE ABB GROUP

Parts List (continued)

Part Number	Description	Quantity
10XF0440S02	04-40 X 1/8 TYPE F HEX HD STAINLESS STIC	2.000 EA
ML14A1B14	14 AWG,A1,BLACK	8.500 IN
ML14A2B14	14 AWG,A2,BLACK	8.500 IN
HA3100A47	THRUBOLT 10-32 X 7.625	4.000 EA
LB1125C01	STD (STOCK) CARTON LABEL BALDOR WITH FLA	1.000 EA
MN416A01	TAG-INSTAL-MAINT no wire (1200/bx) 10/13	1.000 EA
LB1119N	WARNING LABEL	1.000 EA
LC0194	CONNECTION LABEL	1.000 EA
NP0891L	NP STD LASER ENGRAVED DC MTRS, UL CSA CE	1.000 EA
27PA1001	PACKAGING GROUP	1.000 EA

Accessories

Part Number	Description	Multiplier
TK3400	TACHO MOUNTING KIT FOR TK3400	A8
TK3400-HPU	HPU10 MOUNTING KIT 34P/35P TEFC	

BALDOR
A MEMBER OF THE ABB GROUP

Performance Data at 180.0 Arm V, 1.0HP (Typical performance - Not guaranteed values)							
General Characteristics							
Armature Resistance:	1.558 ohms			**Commutating Winding Resistance:**			
Series Winding Resistance:				**Shunt Winding Resistance:**			
Armature Inductance:	14.171 mH			**Armature Inertia:**		10.93 LI²	
Maximum Rated RPM With Field Weakening:				**Maximum Allowable Inrush Amps:**			
Load Characteristics							
Load Point	**1**	**2**	**3**	**4**	**5**	**6**	**7**
Armature Amps:	0.36	1.66	2.81	4.05	5.22	6.35	7.55
RPM:	2736.0	2681.0	2626.0	2580.0	2540.0	2483.0	2455.0
Torque (LB-FT):	0.0	0.55	1.1	1.65	2.19	2.74	3.29

BALDOR A MEMBER OF THE ABB GROUP

Performance Graph at 180.0 Arm V, 1.0HP Typical performance - Not guaranteed values

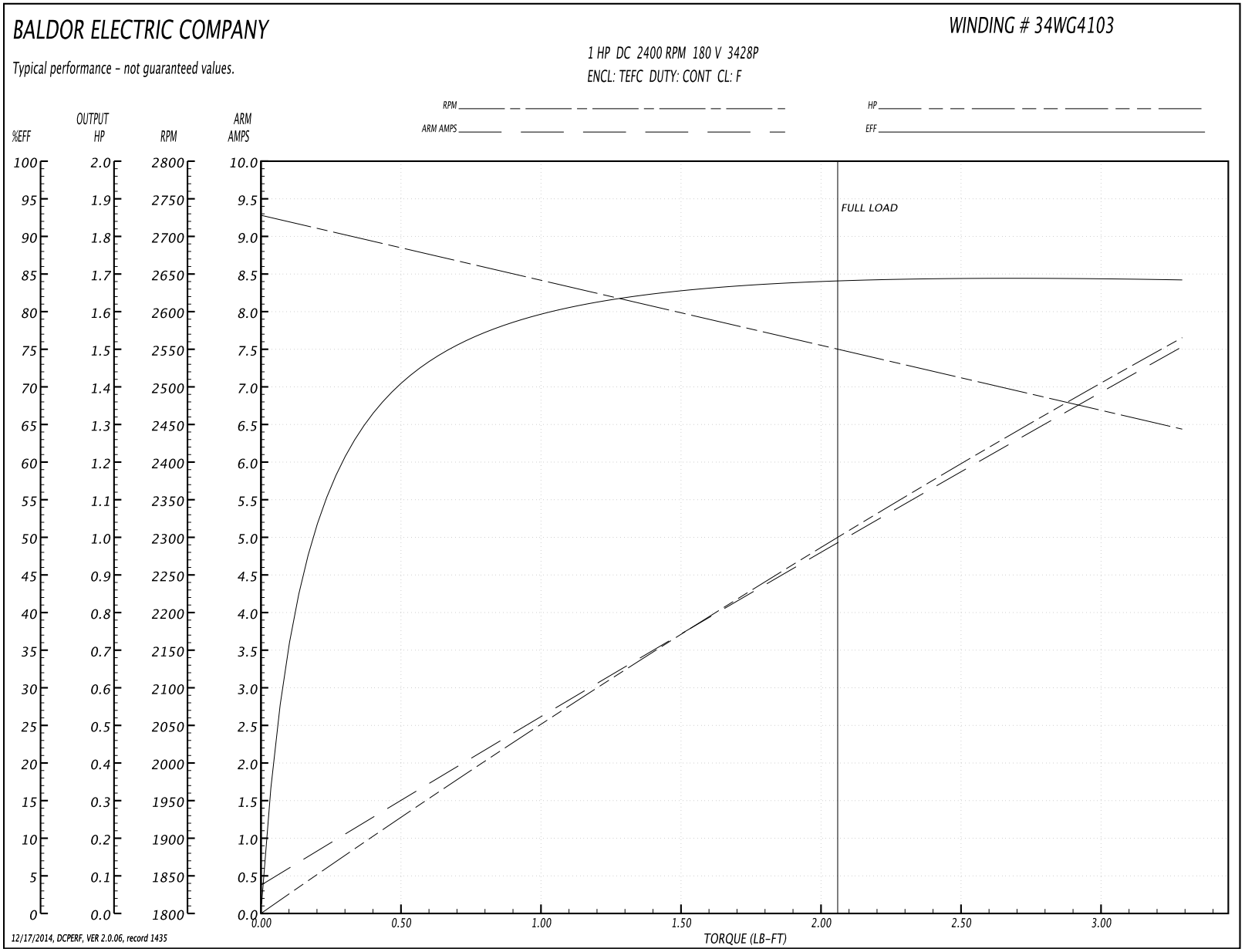

BALDOR
A MEMBER OF THE ABB GROUP

34-5990

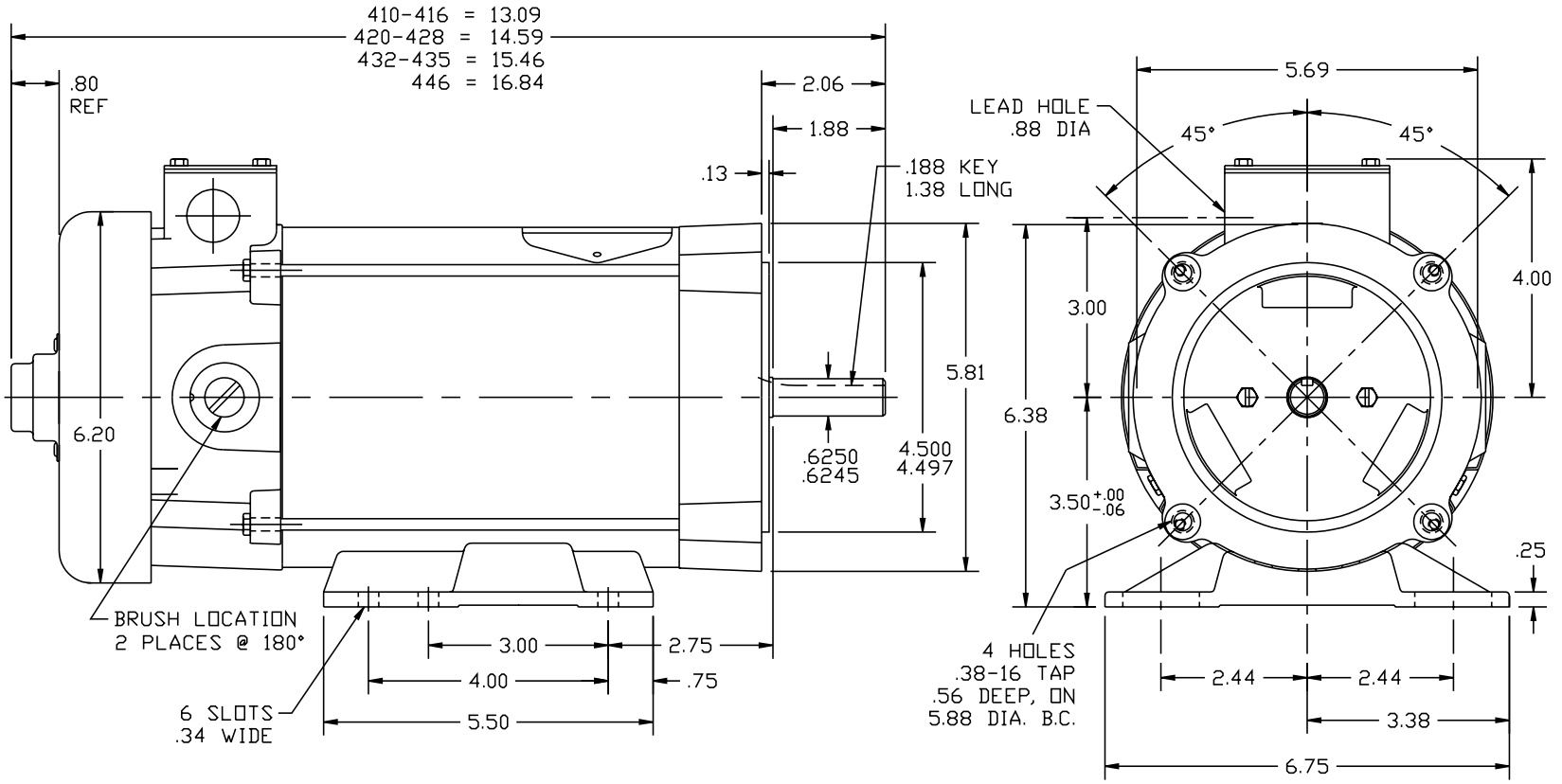

MATL: –				BALDOR ELECTRIC Co.
REV: L	UPDATED TITLE BLOCK AND ACAD LAYERS			
34-5990	REF: 34-5960	BY: TDJ	REVISED: 07/05/95	SPL HORZ "C" 34PM NEMA 56C TEFC W/M.F.T.K.
	FILE: AAA00020929		TDR: 0064783	

34-5990

BALDOR A MEMBER OF THE ABB GROUP

CD0194

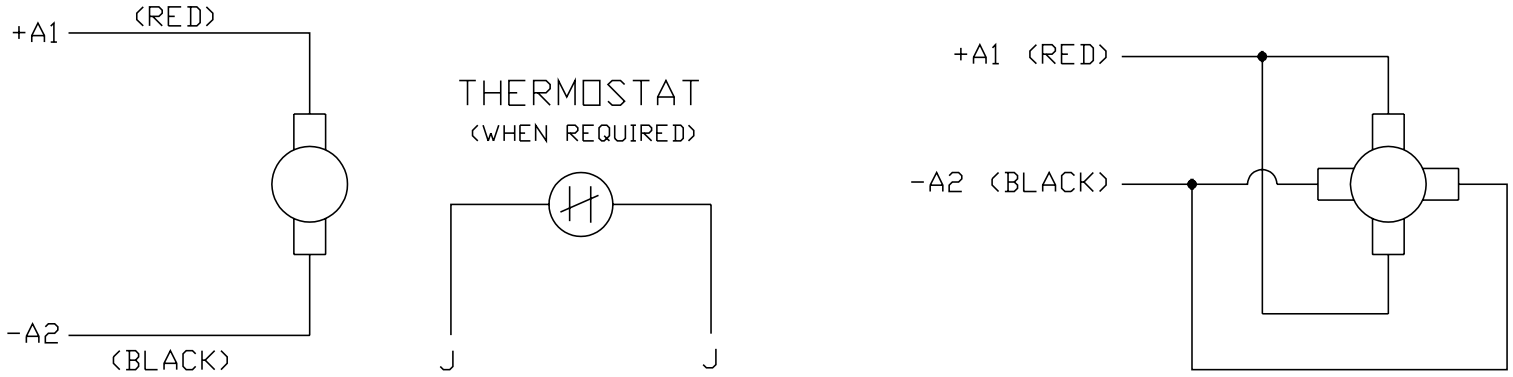

NOTES:

1. CCW ROTATION AS SHOWN FACING COMMUTATOR END. TO REVERSE MOTOR ROTATION OR TACHOMETER OUTPUT POLARITY INTERCHANGE LEADS A1(RED) & A2(BLACK)

2. LEAD COLORS FOR REFERENCE ONLY & NOT SPECIFIED BY THIS DRAWING. LEAD COLORS SPECIFIED BY LAYOUT DRAWING & BILL OF MATERIAL ONLY.

MATL: –				BALDOR ELECTRIC Co.
REV: E	ADDED NOTE "LEAD COLORS FOR REFERENCE ONLY &....			
CD0194	SCALE: –	BY: CK	REVISED: 07/28/95	CD TYPE P DC PERMANENT MAGNET MOTORS AND TACHOMETERS
	FILE: AAA00004503		TDR: 0078737	

CD0194

BALDOR A MEMBER OF THE ABB GROUP