38

PRIMARY: 460 Volts Delta
SECONDARY: 230Y/133 Volts
TAPS: 2-2½% ANFC and BNFC

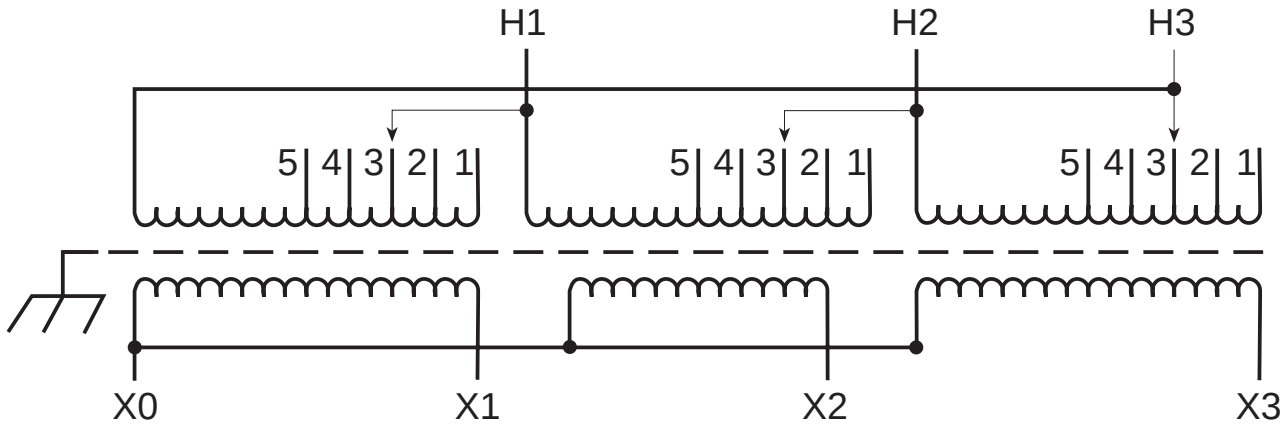

Primary Volts	%	Connect Leads to Tap No.
483	105	1
472	102.5	2
460	100	3
449	97.5	4
437	95	5

Secondary Volts

230		X1, X2, X3
133 1 phase		X1 & X0 X2 & X0 X3 & X0