DATE APRIL 19, 2004	OUTLINE DIMENSIONS	MOTOR TYPE: AEHE
CATALOG NO. E0508	3-PHASE INDUCTION MOTOR	FRAME NO. 404T

Pole	HP	KW	Hz	VOLT	Syn. Speed RPM
8	50	37.3	60	230/460	900

Ins	Rating	Dimension in	Approx Weight	Bearings
F	CONT.	inches	1166 lbs.	DE: 6317 NDE: 6313

Totally Enclosed Fan Cooled Type, Squirrel-cage Rotor.

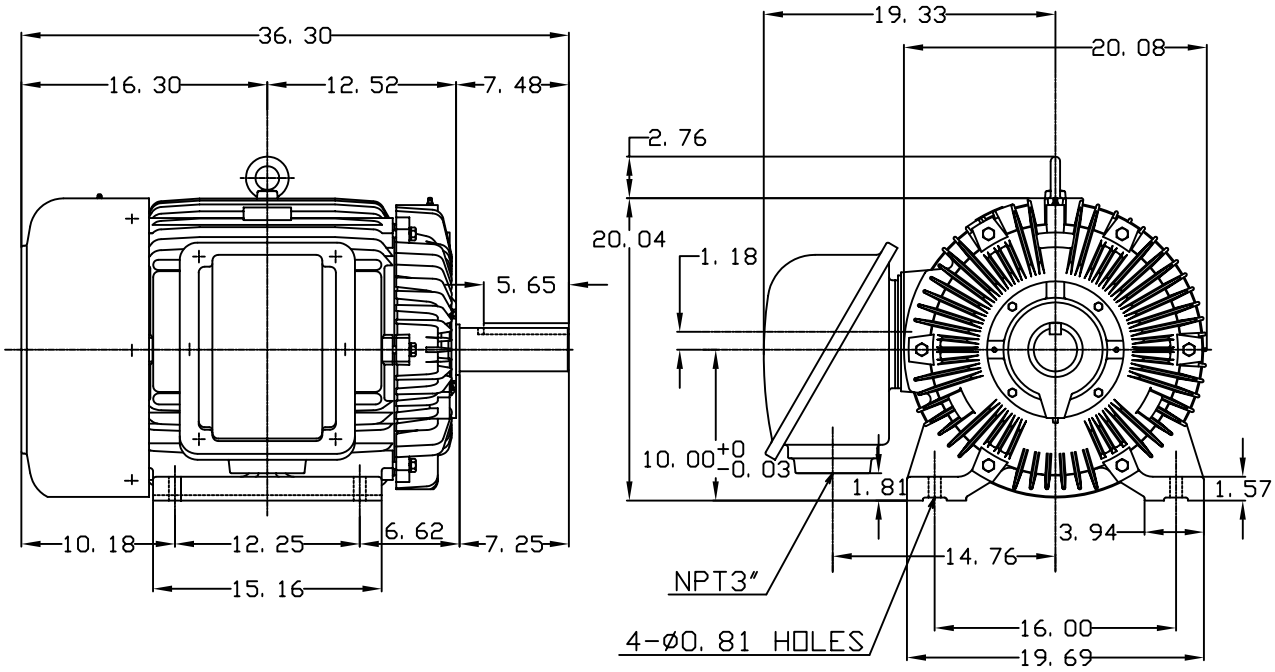

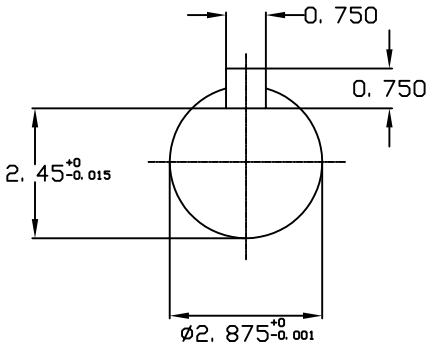

DWN.	J. H. LIANG	11·30·98	TECO Westinghouse	DWG NO. 31057H371001
CHKD.	C. H. KAO	12·26·98		
APPD.	Y. B. HUANG	12·26·98		