BALDOR
A MEMBER OF THE ABB GROUP

BALDOR • RELIANCE

Product Information Packet

ECP2294T

15HP,3525RPM,3PH,60HZ,254T,0934M,TEFC,F1

Copyright © All product information within this document is subject to Baldor Electric Company copyright © protection, unless otherwise noted.

Part Detail

Revision:	V	**Status:**	PRD/A	**Change #:**		**Proprietary:**	No
Type:	AC	**Prod. Type:**	0934M	**Elec. Spec:**	09WGY599	**CD Diagram:**	CD0180
Enclosure:	TEFC	**Mfg Plant:**		**Mech. Spec:**	09J371	**Layout:**	09LYJ371
Frame:	254T	**Mounting:**	F1	**Poles:**	02	**Created Date:**	08-29-2010
Base:	RG	**Rotation:**	R	**Insulation:**	F	**Eff. Date:**	12-02-2014
Leads:	9#12					**Replaced By:**	
Literature:		**Elec. Diagram:**					

BALDOR
A MEMBER OF THE ABB GROUP

Nameplate NP3241											
CAT.NO.	ECP2294T	P/N		ENCLOSURE	TEFC						
SPEC.	09J371Y599	CC	010A	FRAME	254T	S/N					
HP	15	CLASS	F	HZ	60	DES	B				
RPM	3525	RPM MAX	5400	PH	3	KVA-CODE	H				
VOLT	230/460	MOTOR WEIGHT	300								
AMP	34.4/17.2	SER.F.	1.15	PF	88	ODE BRG	6309	DE BRG	6309		
RATING	40C AMB-CONT	NEMA-NOM-EFF	91.7	GREASE	POLYREX EM						
		INV.TYPE	PWM								
TEMP CODE	T3C	INVERTER-TEMP-CODE	180								
TEMP =	160	C HP FR	60	C HP TO	90						
CT HZ FROM	6	CT HZ TO	60								
HTR-VOLTS		HTR-AMPS		HTR-WATTS		MAX. SPACE HEATER TEMP.		VT HZ FROM	O	VT HZ TO	60

BALDOR
A MEMBER OF THE ABB GROUP

Parts List

Part Number	Description	Quantity
SA202246	SA 09J371Y599	1.000 EA
RA189527	RA 09J371Y599	1.000 EA
37FN3002C02	EXFN, PLASTIC, 6.00 OD, 1.500 ID	1.000 EA
09CB1002A12P	KOBX W/1.25 NPT LEAD HOLE & 2.38 MTG HOL	1.000 EA
09GS1010	GASKET, DWG, LEADWIRE SEPERATOR	1.000 EA
10XN2520K12	1/4-20 X.75 GRD 5	4.000 EA
HW1001A25	LOCKWASHER 1/4, ZINC PLT .493 OD, .255 I	4.000 EA
WD1000B16	T&B CX70TN TERMINAL	1.000 EA
10XN2520K08	1/4-20 X .50 GRADE #5, STL, ZINC PLATE	1.000 EA
HW1001A25	LOCKWASHER 1/4, ZINC PLT .493 OD, .255 I	1.000 EA
HA3400A39	STUD- 3/8-16 X 6.19 OAL HEX WELKER	4.000 EA
HW1001A38	LOCKWASHER 3/8, ZINC PLT .688 OD, .382 I	4.000 EA
HW4600B44SP	V-RING SLINGER 1.500 X 2.290 X 0.280	1.000 EA
HW4600B44SP	V-RING SLINGER 1.500 X 2.290 X 0.280	1.000 EA
HA4017A08	.125X3.50 GREASER EXTEN.	1.000 EA
HA4017A02	.125X2.50 GREASER EXTENS.F/S	1.000 EA
HW4019A01	PIPE COUPLING 1/8 NPT,STEEL,ZINC COATING	1.000 EA
HW4500A20	1/8NPT SL PIPE PLUG	1.000 EA
HW5100A11	W3917-042 WVY WSHR (WB)	1.000 EA
10XN2520K36	1/4-20 X 2.25" HX HD SCRWGRADE 5, ZINC P	4.000 EA
09EP1118A38E	PUEP MACH W/E-COAT,309 BRG,PLS GRSR,RLF	1.000 EA
09FH1000E	FAN COVER,CAST W/E-COAT	1.000 EA
10XN3816K28	3/8-16 X 1.75 HEX HD CAP SCREW, GRADE 5	4.000 EA
HW1001A38	LOCKWASHER 3/8, ZINC PLT .688 OD, .382 I	4.000 EA

BALDOR
A MEMBER OF THE ABB GROUP

Parts List (continued)

Part Number	Description	Quantity
HW4500A20	1/8NPT SL PIPE PLUG	1.000 EA
10XN2520K36	1/4-20 X 2.25" HX HD SCRWGRADE 5, ZINC P	4.000 EA
HW1001A38	LOCKWASHER 3/8, ZINC PLT .688 OD, .382 I	4.000 EA
XY3816A12	3/8-16 FINISHED NUT	4.000 EA
12CB1503A01E	CONDUIT BOX LID, MACH, WITH LIP	1.000 EA
12GS1002	GASKET, CONDUIT BOX LID, NEOP	1.000 EA
10XN3118K16	5/16-18 X 1" GRADE #5, STL, ZINC PLATE	2.000 EA
HW1001A31	LOCKWASHER 5/16, ZINC PLT.591 OD, .319 I	2.000 EA
HW2501G25	KEY, 3/8 SQ X 2.875	1.000 EA
MJ5001A27	32220KN GRAY SEALER	0.031 QT
MJ5001A14	DYNAPRO SEAL, CP MOTORS VC#2508050 (603	0.033 EA
MJ5002A01	SILICON RUBBER SEALANT, 732CL 10.3 OZ TU	0.025 EA
85XU0407S04	4X1/4 U DRIVE PIN STAINLESS	2.000 EA
LB1115N	LABEL,LIFTING DEVICE (ON ROLLS)	1.000 EA
LB1002N	LABEL,MARINE DUTY (ON ROLLS)	1.000 EA
MN416A01	TAG-INSTAL-MAINT no wire (1200/bx) 10/13	1.000 EA
09EP1118A37GP6	FREP MACH, 309 BRG. EPOXY PRIMER	1.000 EA
HW4500A17	317400 ALEMITE GREASE RELIEF	1.000 EA
HW4500A21	1618BALEMITE FITTING 825 UNIVERSAL	1.000 EA
HA4054	SHORT T-DRAIN FITTING, .125" N.P.T.	1.000 EA
HA4051A00	PLASTIC CAP FOR GREASE FITTING	1.000 EA
MJ1000A75	GREASE, POLYREX EM EXXON (USe 4824-15A)	0.080 LB
HW4500A03	GREASE FITTING, .125 NPT 1610(ALEMITE) 8	1.000 EA
HW4500A17	317400 ALEMITE GREASE RELIEF	1.000 EA

BALDOR
A MEMBER OF THE ABB GROUP

Parts List (continued)

Part Number	Description	Quantity
HA4054	SHORT T-DRAIN FITTING, .125" N.P.T.	1.000 EA
HA4051A00	PLASTIC CAP FOR GREASE FITTING	1.000 EA
HW2500A25	WOODRUFF KEY USA #1008 #BLOW CARBON STEE	1.000 EA
51XB1214A20	12-14X1.25 HXWSSLD SERTYB	1.000 EA
MG1025N19	PAINT, 778.50 WILKO, RELIANCE ELEC GREEN	0.050 GA
LB1119N	WARNING LABEL	1.000 EA
LB1125C02	SUPER-E (STOCK CTN LABEL SUPER-E WITH FL	4.000 EA
LC0181	CONNECTION LABEL	1.000 EA
NP3241	SS SUPER-E INV UL CSA-EEV PREM CC	1.000 EA
LB1449	DIV-2/NEC WARNING LABEL	1.000 EA
09PA1000	PACKAGING GROUP COMBINED PRINT	1.000 EA
LB1506	LABEL "AMERICAN MADE" 1.50 X 1.00	1.000 EA

BALDOR
A MEMBER OF THE ABB GROUP

AC Induction Motor Performance Data

Record # 47261 - Typical performance - not guaranteed values

Winding: 09WGY599-R032	**Type:** 0934M	**Enclosure:** TEFC

Nameplate Data				460 V, 60 Hz: High Voltage Connection	
Rated Output (HP)	15			Full Load Torque	22.2 LB-FT
Volts	230/460			Start Configuration	direct on line
Full Load Amps	34.4/17.2			Breakdown Torque	103 LB-FT
R.P.M.	3525			Pull-up Torque	33 LB-FT
Hz	60	Phase	3	Locked-rotor Torque	41 LB-FT
NEMA Design Code	B	KVA Code	H	Starting Current	128 A
Service Factor (S.F.)	1.15			No-load Current	5.9 A
NEMA Nom. Eff.	91.7	Power Factor	88	Line-line Res. @ 25ºC	0.559 Ω
Rating - Duty	40C AMB-CONT			Temp. Rise @ Rated Load	55°C
S.F. Amps				Temp. Rise @ S.F. Load	66°C
				Rotor inertia	0.868 LF²

Load Characteristics 460 V, 60 Hz, 15 HP

% of Rated Load	25	50	75	100	125	150	S.F.
Power Factor	57	78	86	88	91	91	90
Efficiency	86.2	90.8	91.9	91.9	91.5	90.7	91.7
Speed	3583	3567	3550	3533	3514	3493	3522
Line amperes	7.2	10	13.4	17.2	21.2	25.5	19.6

BALDOR A MEMBER OF THE ABB GROUP

Performance Graph at 460V, 60Hz, 15.0HP Typical performance - Not guaranteed values

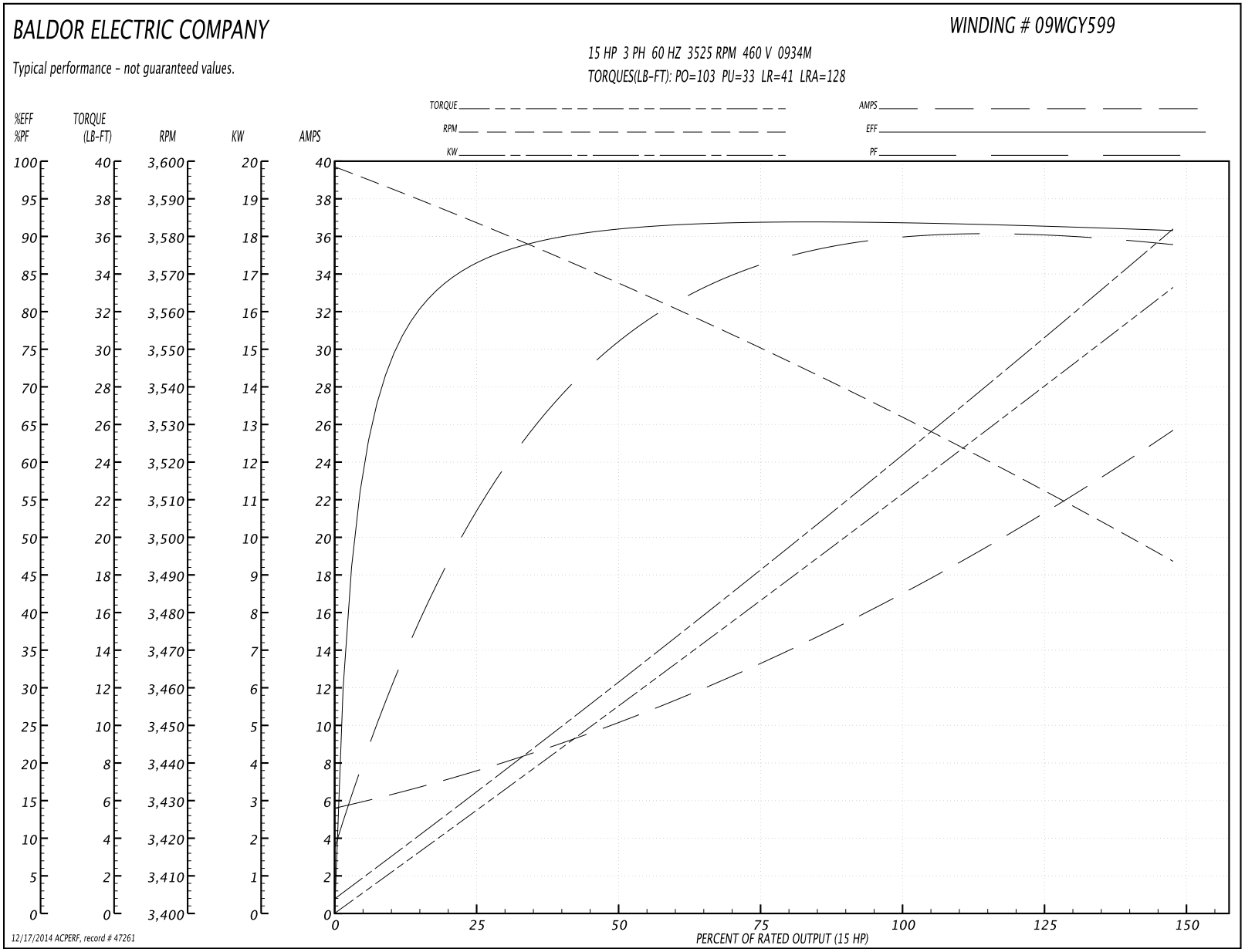

BALDOR A MEMBER OF THE ABB GROUP

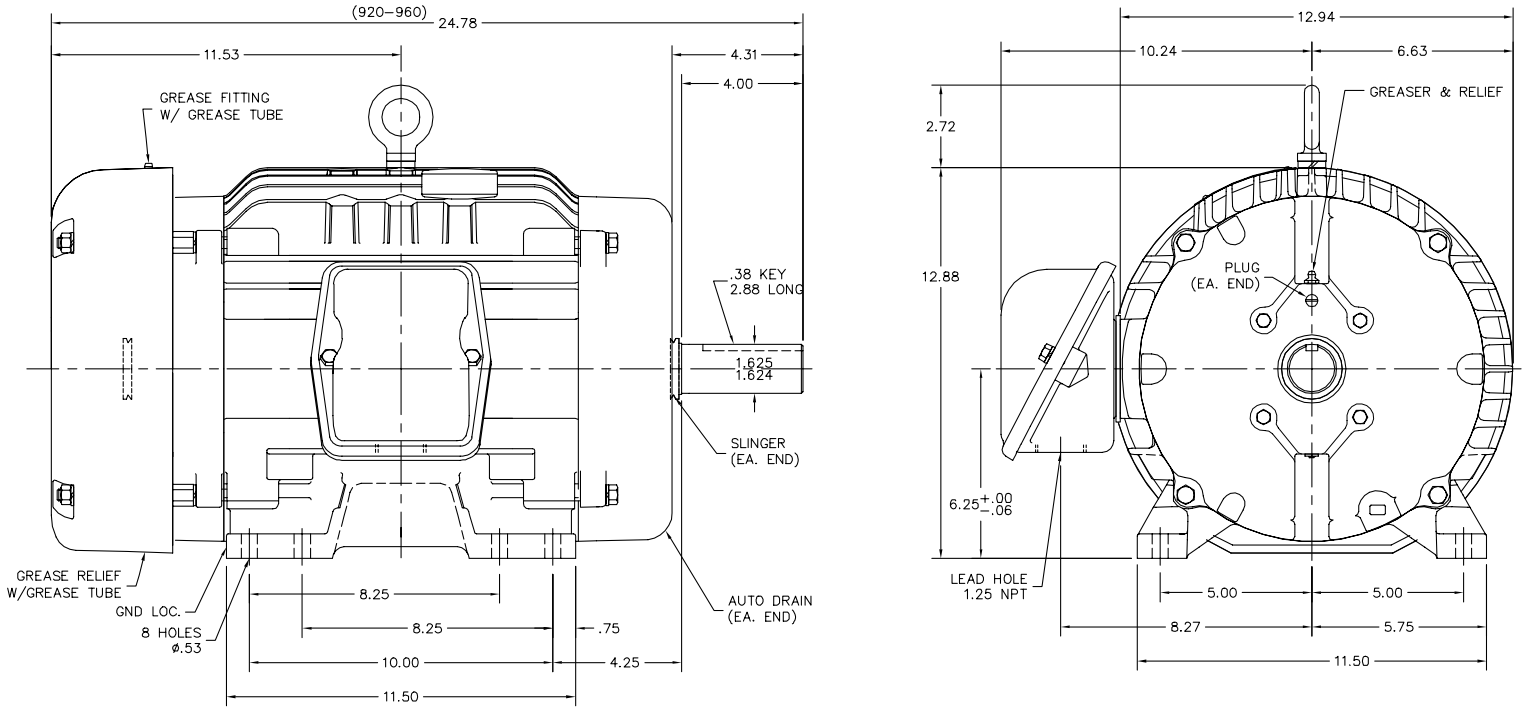

CUSTOMER IS RESPONSIBLE FOR DETERMINING THAT BALDOR'S PRODUCT WILL PERFORM SUITABLY IN THE INTENDED APPLICATION.

REV. DESC: UPDATE OAL DIM TO ACCOMODATE LOCKWASHERS		
REV. LTR: E	VERSION: 05	TDR: 000000794567
FILE: \AAA\00174\539	REVISED: 10:15:08 04/11/2013	BY: ENODIDO
MTL: –		

BALDOR

HORZ TEFC 254–6T ECP W/309 BRGS, PLS GREASING

SH 1 of 1

BALDOR
A MEMBER OF THE ABB GROUP

CD0180

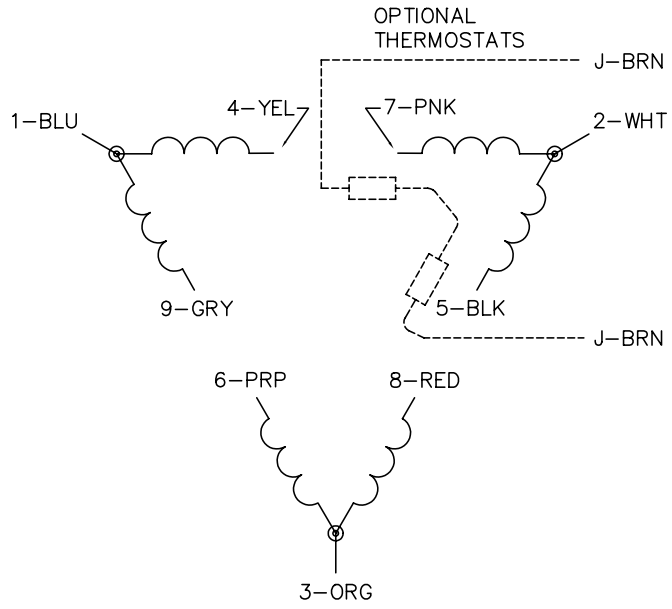

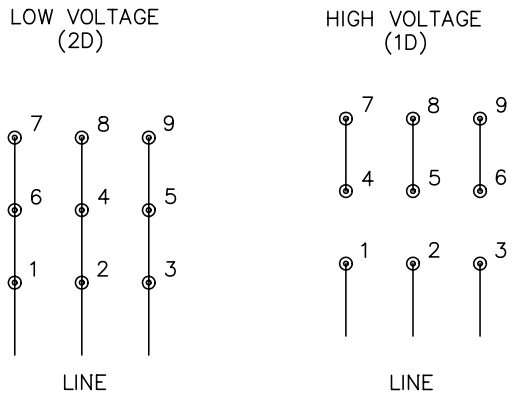

NOTES:

1. INTERCHANGE ANY TWO LINE LEADS TO REVERSE ROTATION.
2. OPTIONAL THERMOSTATS ARE PROVIDED WHEN SPECIFIED.
3. ACTUAL NUMBER OF INTERNAL PARALLEL CIRCUITS MAY BE A MULTIPLE OF THOSE SHOWN ABOVE.
4. LEAD COLORS ARE OPTIONAL. LEADS MUST ALWAYS BE NUMBERED AS SHOWN.

CD0180

REV. DESC: REVISE TO SHOW OPTIONAL COLORS			
REV. LTR: C	BY: JLP	REVISED: 01/21/99 2:28	TDR: 0171435
CD0180		FILE: AAA00005148	MDL: –
		MTL: –	

BALDOR ELECTRIC Co.

3PH, DV, 9 LEADS, DELTA CONNECTION

BALDOR
A MEMBER OF THE ABB GROUP