BALDOR
A MEMBER OF THE ABB GROUP

BALDOR • RELIANCE

Product Information Packet

EM2511T

10HP,1180RPM,3PH,60HZ,256T,3954M,OPSB,F1

Copyright © All product information within this document is subject to Baldor Electric Company copyright © protection, unless otherwise noted.

Part Detail							
Revision:	AA	**Status:**	PRD/A	**Change #:**		**Proprietary:**	No
Type:	AC	**Prod. Type:**	3954M	**Elec. Spec:**	39WGW950	**CD Diagram:**	CD0180
Enclosure:	OPSB	**Mfg Plant:**		**Mech. Spec:**	39K57	**Layout:**	39LYK057
Frame:	256T	**Mounting:**	F1	**Poles:**	06	**Created Date:**	
Base:	RG	**Rotation:**	R	**Insulation:**	F	**Eff. Date:**	11-06-2014
Leads:	9#12					**Replaced By:**	
Literature:		**Elec. Diagram:**					

BALDOR A MEMBER OF THE ABB GROUP

Nameplate NP1259L								
CAT.NO.	EM2511T							
SPEC.	39K057W950							
HP	10							
VOLTS	230/460							
AMP	28.6/14.3							
RPM	1180							
FRAME	256T	HZ	60	PH	3			
SER.F.	1.15	CODE	J	DES	B	CL	F	
NEMA-NOM-EFF	91.7	PF	71					
RATING	40C AMB-CONT							
CC	010A	USABLE AT 208V	30					
DE	6309	ODE	6208					
ENCL	OPSB	SN						

BALDOR A MEMBER OF THE ABB GROUP

Parts List

Part Number	Description	Quantity
SA039734	SA 39K057W950	1.000 EA
RA035653	RA 39K057W950	1.000 EA
S/P107-000-005	SUPER-E PROC'S(254/6 FR.) ZK PLANT - POL	1.000 EA
HA6361A01	LIFTING LUG FOR 37, 39 & 40 FRAME (AUTOP	2.000 EA
HA6016	ADAPTER, CAST CONDUIT BOX	1.000 EA
09CB3002SP	CB W/1.38 LEAD HOLE FOR 37, 39, 307 & 30	1.000 EA
51XW2520A12	.25-20 X .75, TAPTITE II, HEX WSHR SLTD	2.000 EA
HW1001A25	LOCKWASHER 1/4, ZINC PLT .493 OD, .255 I	2.000 EA
WD1000B17	T&B CX35TN TERMINAL	1.000 EA
11XW1032G06	10-32 X .38, TAPTITE II, HEX WSHR SLTD U	1.000 EA
39EP3200A01SP	FR/PU ENDPLATE, MACH	1.000 EA
HW5100A08	W3118-035 WVY WSHR (WB)	1.000 EA
39EP3201A13	PU ENDPLATE, MACH	1.000 EA
XY3816A12	3/8-16 FINISHED NUT	8.000 EA
09CB3501SP	CONDUIT BOX LID FOR 09CB3001 & 09CB3002	1.000 EA
51XW2520A12	.25-20 X .75, TAPTITE II, HEX WSHR SLTD	2.000 EA
HW2501G25	KEY, 3/8 SQ X 2.875	1.000 EA
LB1115N	LABEL,LIFTING DEVICE (ON ROLLS)	1.000 EA
HA4051A00	PLASTIC CAP FOR GREASE FITTING	1.000 EA
HW4500A03	GREASE FITTING, .125 NPT 1610(ALEMITE) 8	1.000 EA
HW4500A20	1/8NPT SL PIPE PLUG	1.000 EA
MJ1000A75	GREASE, POLYREX EM EXXON (USe 4824-15A)	0.030 LB
HA4051A00	PLASTIC CAP FOR GREASE FITTING	1.000 EA
HW4500A03	GREASE FITTING, .125 NPT 1610(ALEMITE) 8	1.000 EA

BALDOR
A MEMBER OF THE ABB GROUP

Parts List (continued)

Part Number	Description	Quantity
HW4500A20	1/8NPT SL PIPE PLUG	1.000 EA
MG1000Y03	MUNSELL 2.53Y 6.70/ 4.60, GLOSS 20,	0.050 GA
85XU0407S04	4X1/4 U DRIVE PIN STAINLESS	2.000 EA
39AD2002A01	BAFFLE PLATE 39 OPEN, SLOTTED BAND MTRS	1.000 EA
39AD2002A01	BAFFLE PLATE 39 OPEN, SLOTTED BAND MTRS	1.000 EA
HA3154A03	STUD, 3/8-16 X 17.75	4.000 EA
LB1119N	WARNING LABEL	1.000 EA
LB1125C02	SUPER-E (STOCK CTN LABEL SUPER-E WITH FL	4.000 EA
LC0181	CONNECTION LABEL	1.000 EA
NP1259L	ALUM SUPER-E UL CSA-EEV CC NEMA PREMIUM	1.000 EA
39PA1000	PACKAGING GROUP 39 PRINT	1.000 EA
MN416A01	TAG-INSTAL-MAINT no wire (1200/bx) 10/13	1.000 EA
LB1506	LABEL "AMERICAN MADE" 1.50 X 1.00	1.000 EA

BALDOR
A MEMBER OF THE ABB GROUP

Accessories

Part Number	Description	Multiplier
39-3400	C FACE KIT	A8

BALDOR
A MEMBER OF THE ABB GROUP

AC Induction Motor Performance Data

Record # 13008 - Typical performance - not guaranteed values

Winding: 39WGW950-R001	**Type:** 3954M	**Enclosure:** OPSB

Nameplate Data				460 V, 60 Hz: High Voltage Connection	
Rated Output (HP)	10			Full Load Torque	44.4 LB-FT
Volts	230/460			Start Configuration	direct on line
Full Load Amps	28.6/14.3			Breakdown Torque	132 LB-FT
R.P.M.	1180			Pull-up Torque	53 LB-FT
Hz	60	Phase	3	Locked-rotor Torque	69.8 LB-FT
NEMA Design Code	B	KVA Code	J	Starting Current	91.8 A
Service Factor (S.F.)	1.15			No-load Current	7.16 A
NEMA Nom. Eff.	91.7	Power Factor	71	Line-line Res. @ 25ºC	0.746 Ω
Rating - Duty	40C AMB-CONT			Temp. Rise @ Rated Load	22°C
S.F. Amps				Temp. Rise @ S.F. Load	29°C
				Rotor inertia	4.34 LF²

Load Characteristics 460 V, 60 Hz, 10 HP

% of Rated Load	25	50	75	100	125	150	S.F.
Power Factor	34	54	65	71	74	75	73
Efficiency	85.7	91	92	92	91.4	90.5	91.6
Speed	1196	1192	1187	1182	1177	1172	1179
Line amperes	8.04	9.52	11.7	14.25	17.29	20.7	16.07

BALDOR A MEMBER OF THE ABB GROUP

Performance Graph at 460V, 60Hz, 10.0HP Typical performance - Not guaranteed values

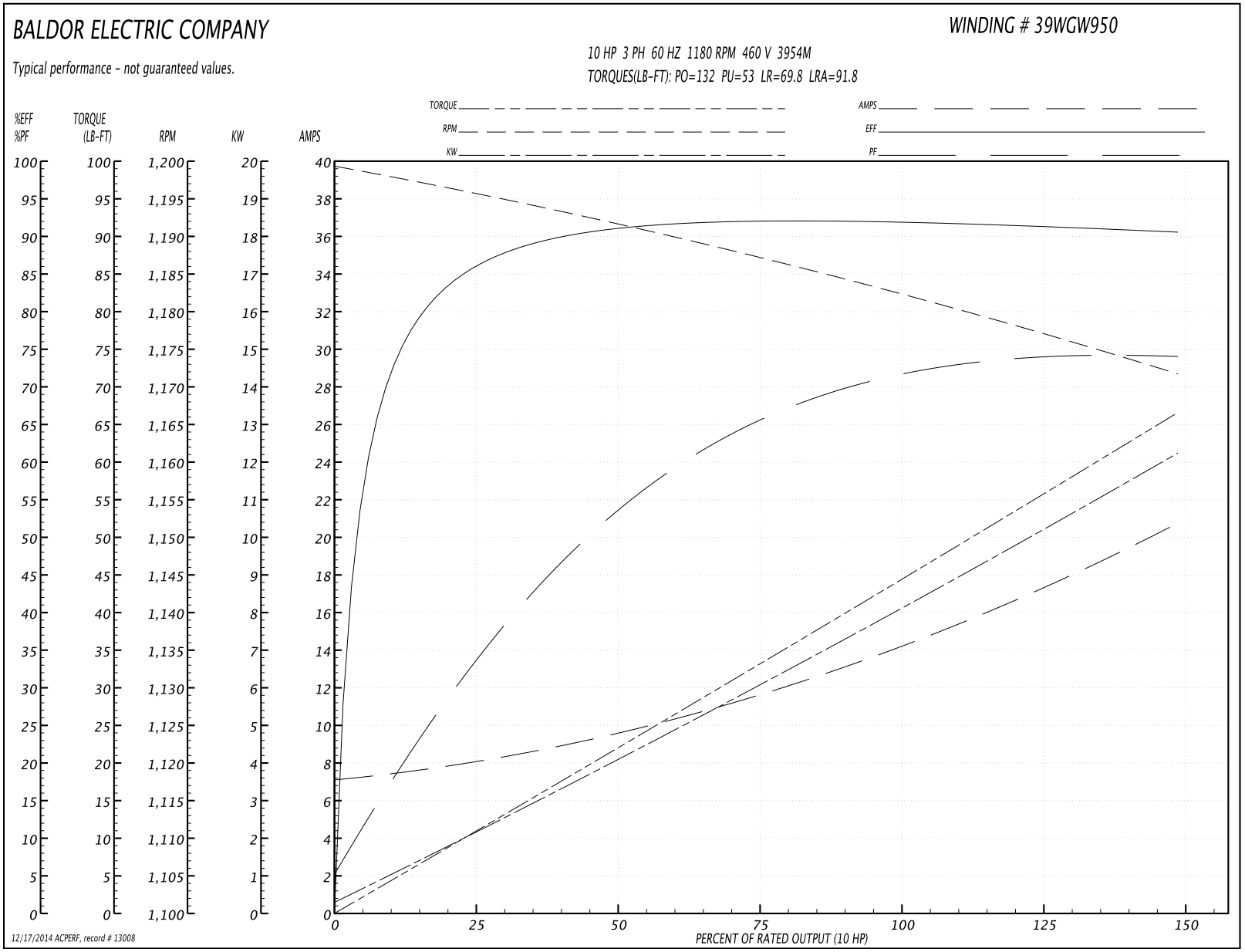

BALDOR
A MEMBER OF THE ABB GROUP

AC Induction Motor Performance Data

Record # 33857 - Typical performance - not guaranteed values

Winding: 39WGW950-R001	**Type:** 3954M	**Enclosure:** OPSB

Nameplate Data				460 V, 60 Hz: High Voltage Connection	
Rated Output (HP)	10			Full Load Torque	44.1 LB-FT
Volts	230/460			Start Configuration	direct on line
Full Load Amps	28.6/14.3			Breakdown Torque	149 LB-FT
R.P.M.	1180			Pull-up Torque	55.5 LB-FT
Hz	60	Phase	3	Locked-rotor Torque	67.6 LB-FT
NEMA Design Code	B	KVA Code	J	Starting Current	91.6 A
Service Factor (S.F.)	1.15			No-load Current	7.51 A
NEMA Nom. Eff.	91.7	Power Factor	71	Line-line Res. @ 25ºC	0.72568 Ω
Rating - Duty	40C AMB-CONT			Temp. Rise @ Rated Load	18°C
S.F. Amps				Temp. Rise @ S.F. Load	22°C
				Rotor inertia	4.34 LF²

Load Characteristics 460 V, 60 Hz, 10 HP

% of Rated Load	25	50	75	100	125	150	S.F.
Power Factor	34	53	64	70	73	74	72
Efficiency	84.5	90.2	91.8	92.1	91.8	91.1	91.9
Speed	1195.9	1191.9	1187.8	1182.8	1177.7	1171.6	1180
Line amperes	8.2	9.72	11.9	14.4	17.5	20.6	16.3

BALDOR A MEMBER OF THE ABB GROUP

Performance Graph at 460V, 60Hz, 10.0HP Typical performance - Not guaranteed values

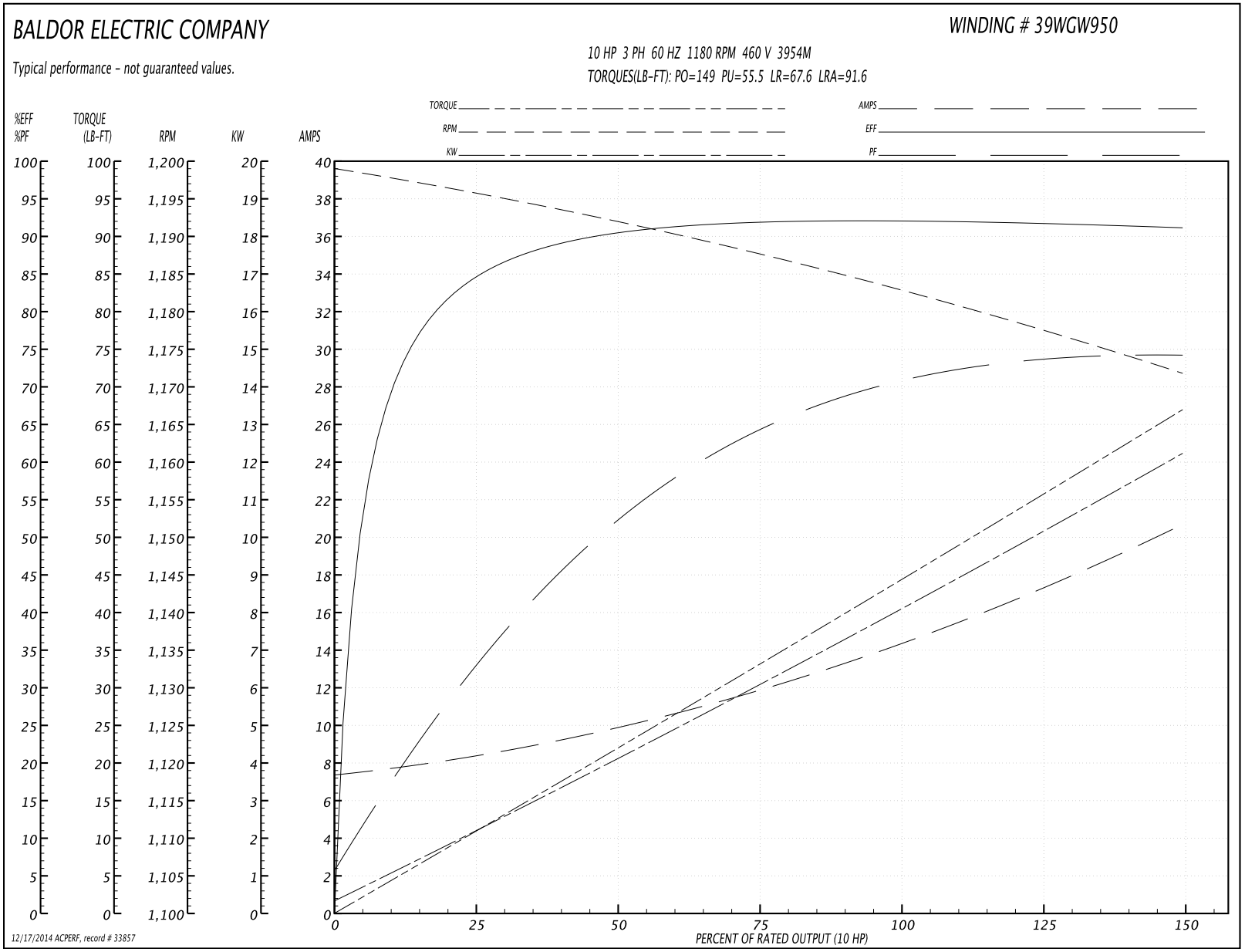

BALDOR
A MEMBER OF THE ABB GROUP

39LYK057

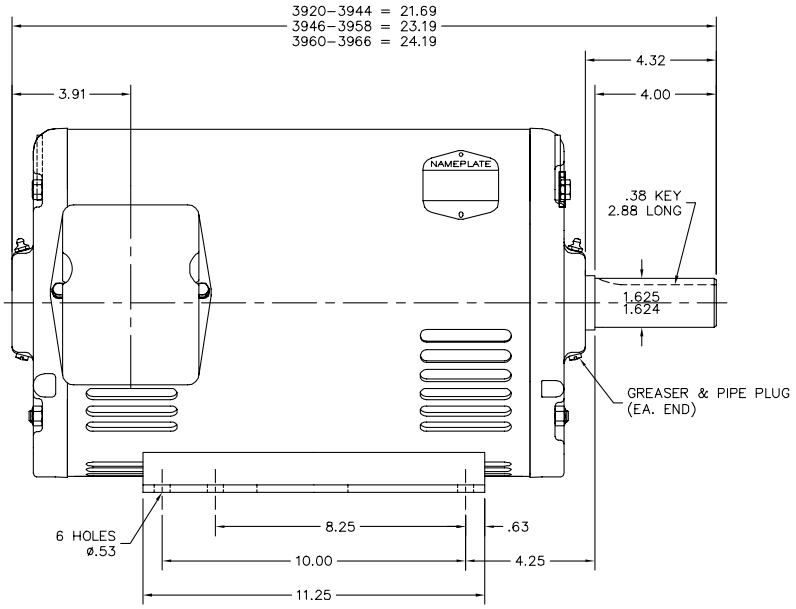

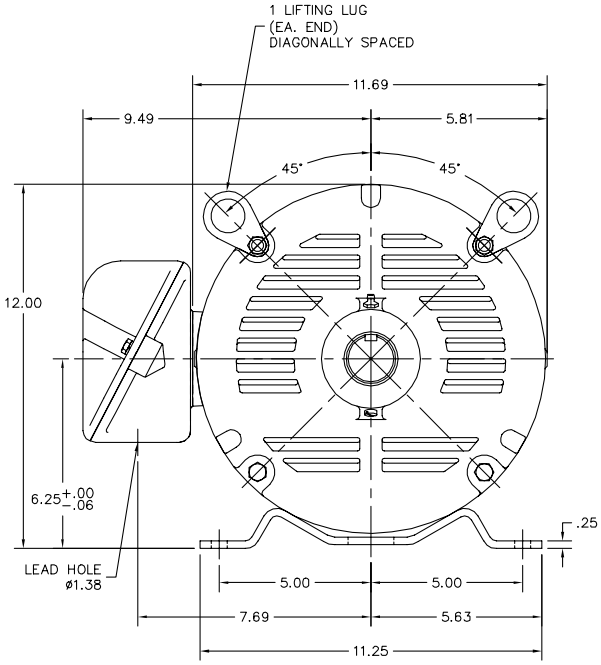

39LYK057

CUSTOMER IS RESPONSIBLE FOR DETERMINING THAT BALDOR'S PRODUCT WILL PERFORM SUITABLY IN THE INTENDED APPLICATION.

REV. DESC: UPDATED DESCRIPTION		
REV. LTR: H	VERSION: 06	TDR: 000000855568
FILE: \AAA\00049\866	REVISED: 03:22:41 05/28/2014	BY: ENNINDO
MTL: –		

BALDOR

HORZ OPSB 254–6T SUPER–E

SH 1 of 1

BALDOR
A MEMBER OF THE ABB GROUP

CD0180

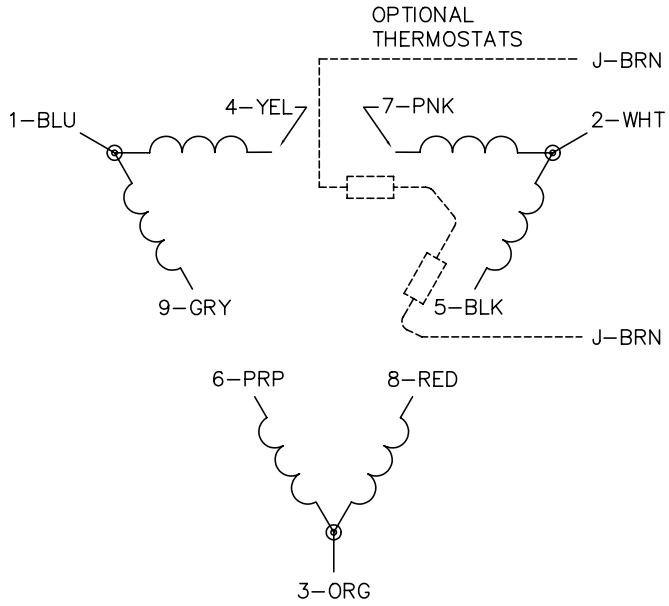

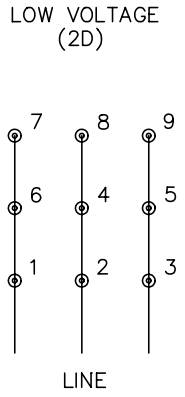

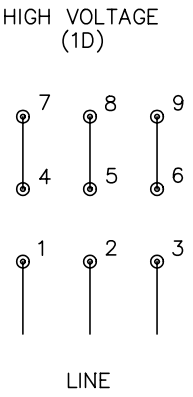

NOTES:

1. INTERCHANGE ANY TWO LINE LEADS TO REVERSE ROTATION.
2. OPTIONAL THERMOSTATS ARE PROVIDED WHEN SPECIFIED.
3. ACTUAL NUMBER OF INTERNAL PARALLEL CIRCUITS MAY BE A MULTIPLE OF THOSE SHOWN ABOVE.
4. LEAD COLORS ARE OPTIONAL. LEADS MUST ALWAYS BE NUMBERED AS SHOWN.

CD0180

REV. DESC: REVISE TO SHOW OPTIONAL COLORS			
REV. LTR: C	BY: JLP	REVISED: 01/21/99 2:28	TDR: 0171435
CD0180		FILE: AAA00005148	MDL: –
		MTL: –	

BALDOR ELECTRIC Co.

3PH, DV, 9 LEADS, DELTA CONNECTION

BALDOR
A MEMBER OF THE ABB GROUP