DATE Sept. 25, 2006	OUTLINE DIMENSIONS	MOTOR TYPE: AEHH8N-CF
Cat. #: EP0402C	3-PHASE INDUCTION MOTOR	FRAME NO. 324TSC

Pole	HP	kW	Hz	VOLT	Syn. Speed r/min(rpm)
2	40	30	60	230/460	3600

Ins	Rating	Dimension in	Approx Weight	Bearings
F	CONT.	inches	635 lbs	DE: 6312C3 NDE: 6212C3

Totally Enclosed Fan Cooled Type. Squirrel-cage Rotor.

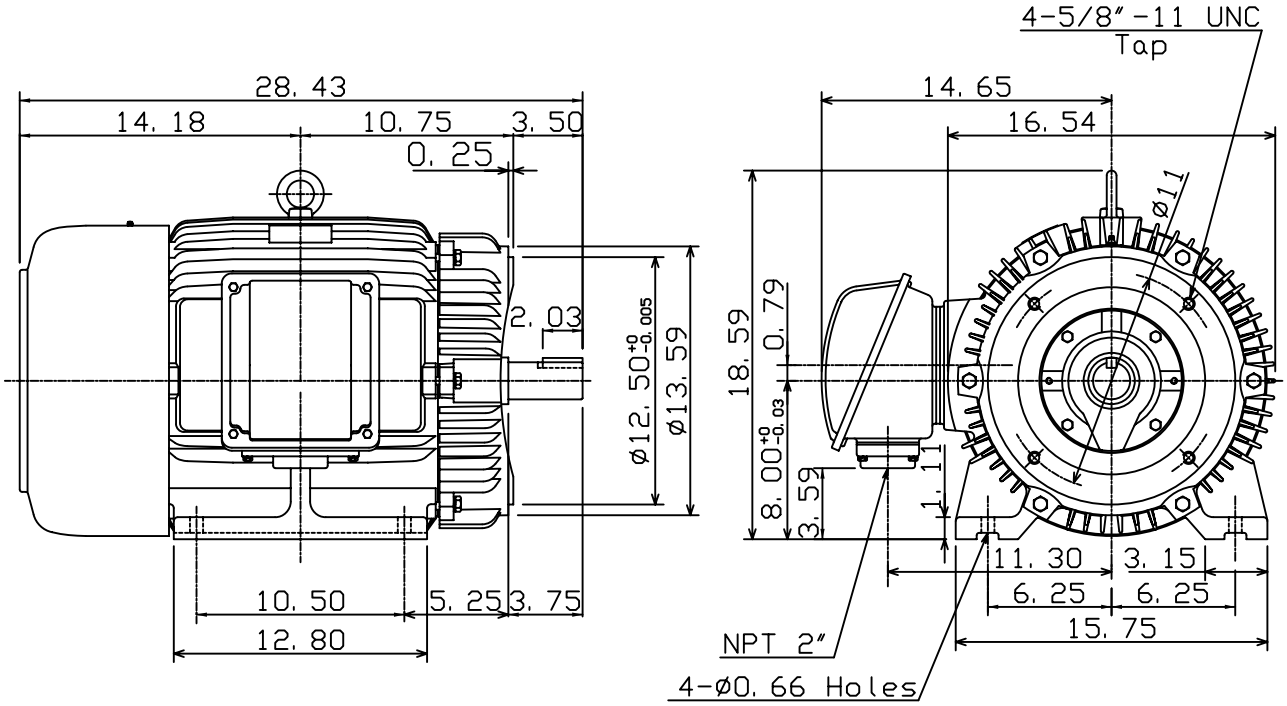

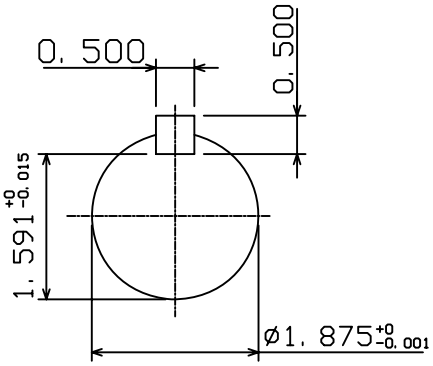

1	01.10.05		K. L. KUO

DWN.	W. C. LAY	07-21-97	TECO Westinghouse	DWG NO.
CHKD.	C. H. KAO	07-21-97		31049J712061
APPD.	Y. B. HUANG	07-21-97		