DATE January 20, 2009	OUTLINE DIMENSIONS	MOTOR TYPE: AEHH8B-CF
CAT. #:	3-PHASE INDUCTION MOTOR	FRAME NO. 215TC

Pole	HP	kW	Hz	VOLT	Syn.Speed r/min(rpm)
2/4/6/8	-	-	60	460	-

Ins	Rating	Dimension in	Approx Weight	Bearings
F	CONT.	inches	198 LBS	DE: 6308ZC3 NDE: 6306ZC3

Totally Enclosed Fan-Cooled Type.Squirrel-Cage Rotor.

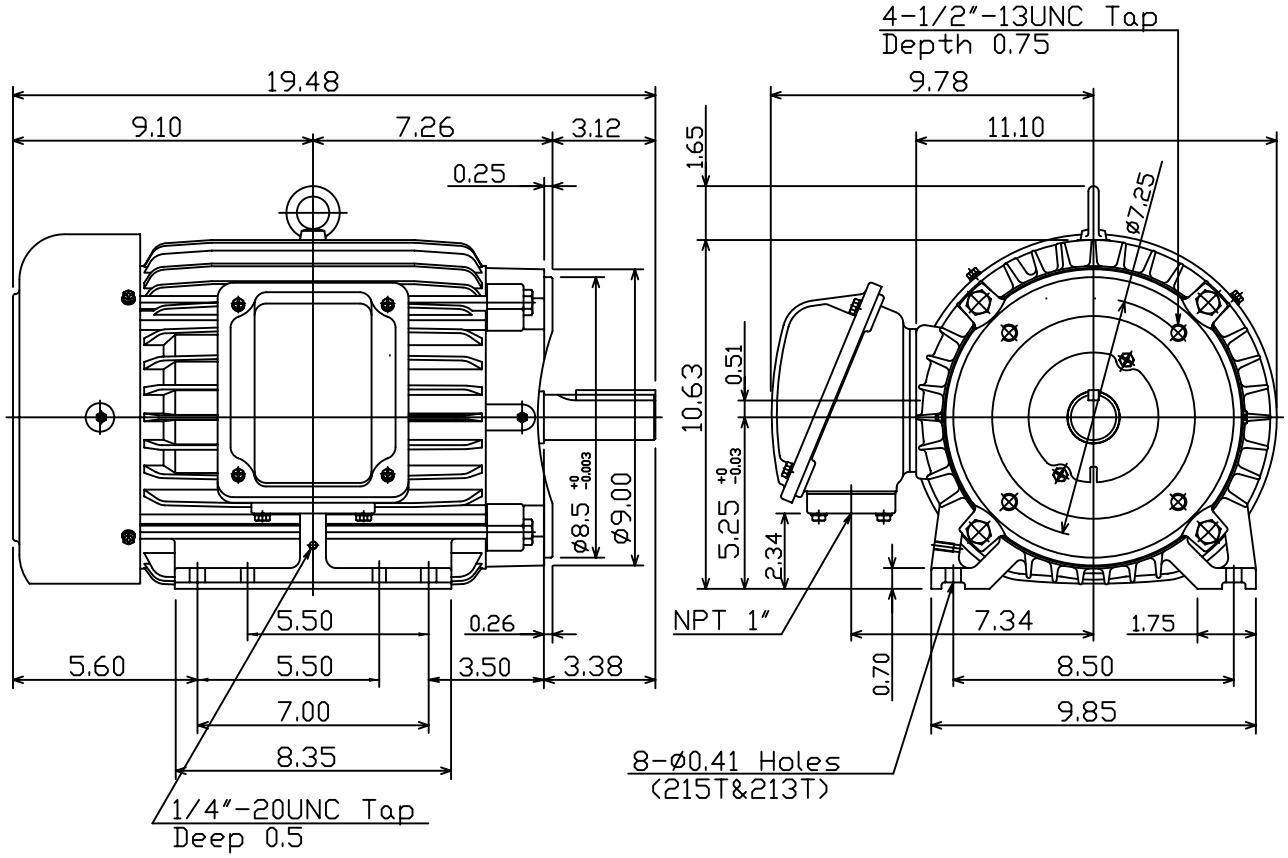

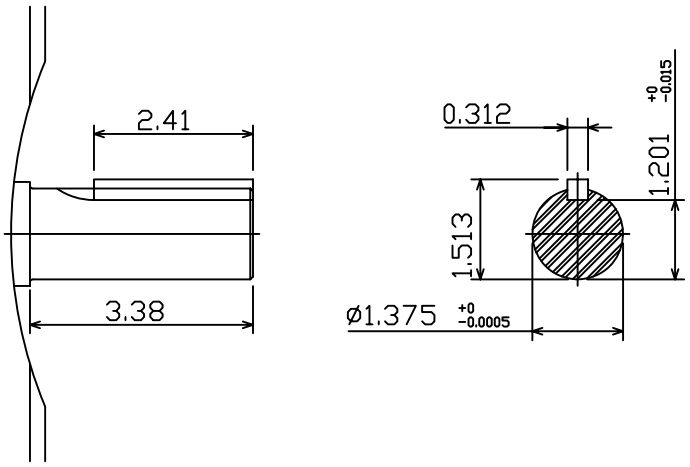

Note:
1. With Inpro Seals On Both End.

1	??:TA6591-1??	

DWN.	J.H.LIANG	10·03·06	TECO Westinghouse	DWG NO.
CHKD.	H.C.YAN	10·03·06		31049M894201
APPD.	M.C.TSAI	10·03·06		