M-13370	1

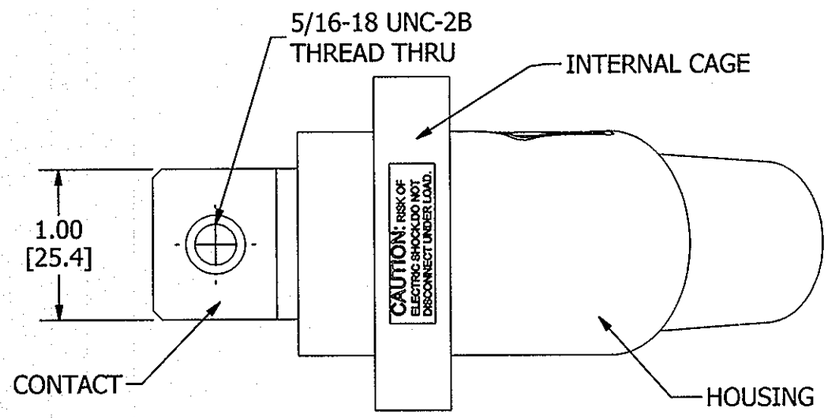

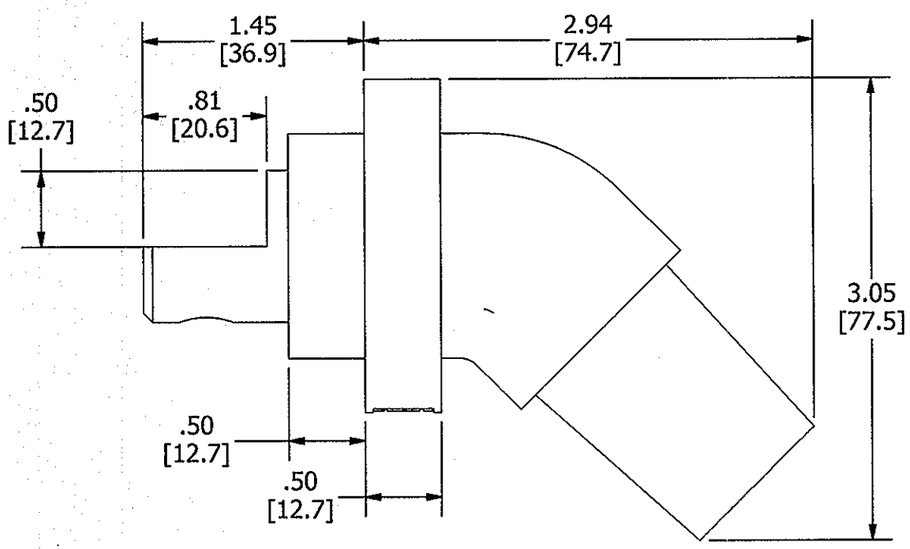

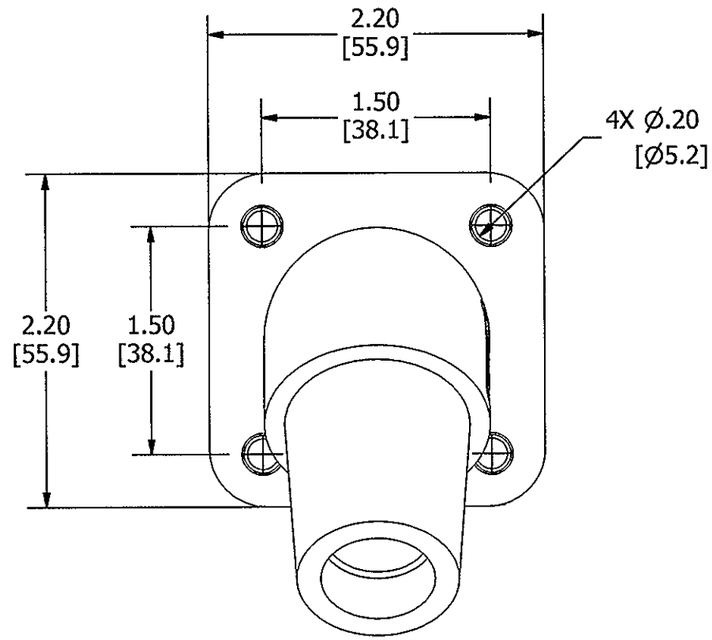

NOTES:

1. DIMENSIONS ARE IN INCHES ±.02 [mm] ±.5
2. RATING: 600VAC/250VDC, 400 AMP.
3. UL/c-ul ENCLOSURE TYPES 3R, 4X, 12, SEE INSTRUCTION SHEET.

HUBBELL CAT. NO	COLOR
HBLFRABBK	BLACK
HBLFRABBL	BLUE
HBLFRABBN	BROWN
HBLFRABGN	GREEN
HBLFRABO	ORANGE
HBLFRABR	RED
HBLFRABW	WHITE
HBLFRABY	YELLOW

LIST OF PARTS

DESCRIPTION	MATERIAL	FINISH
HOUSING	TPE	SEE TABLE
CONTACT	BRASS	
INTERNAL CAGE	NYLON	

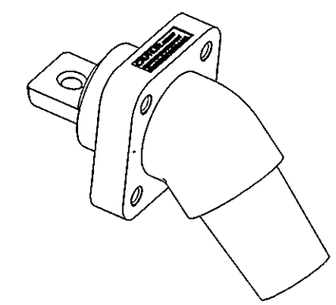

1/2 SCALE SHOWN

SYM	DESCRIPTION	APPROVED	DATE
1	RELEASED PER DCN# 22075 CAC	TLS	04/28/16

THE DESIGN AND DIMENSIONS OF THE PRODUCT SHOWN ON THIS DRAWING ARE SUBJECT TO CHANGE WITHOUT NOTICE

TITLE
SINGLE POLE
ANGLED FEMALE RECEPTACLE
W/BUS BAR

TOLERANCES UNLESS OTHERWISE SPECIFIED
FRACTIONS ± 1/64
DECIMALS ± .030
ANGLES ± 2°

WIRING DEVICE-KELLEMS
HUBBELL INCORPORATED
SHELTON, CT

DR. BY	CAC	APP. BY	TLS
TR. BY		SCALE	1:1
CHK'D BY	TLS	DATE	4/6/2016

DIMENSION SHEET FOR CAT. NO. SEE TABLE

REPAIRABLE ☐ NON-REPAIRABLE ☒

B

M-13370

1

CODE 74545