BALDOR
A MEMBER OF THE ABB GROUP

BALDOR • RELIANCE

Product Information Packet

IDM4100T

15HP,1180RPM,3PH,60HZ,284T,1056M,TEBC,F1

Copyright © All product information within this document is subject to Baldor Electric Company copyright © protection, unless otherwise noted.

Part Detail

Revision:	T	**Status:**	PRD/A	**Change #:**		**Proprietary:**	No
Type:	AC	**Prod. Type:**	1056M	**Elec. Spec:**	10WGX977	**CD Diagram:**	CD0180
Enclosure:	TEBC	**Mfg Plant:**		**Mech. Spec:**	10F206	**Layout:**	10LYF206
Frame:	284T	**Mounting:**	F1	**Poles:**	06	**Created Date:**	02-16-2006
Base:	RG	**Rotation:**	R	**Insulation:**	H	**Eff. Date:**	11-21-2014
Leads:	9#10					**Replaced By:**	
Literature:		**Elec. Diagram:**					

BALDOR
A MEMBER OF THE ABB GROUP

Nameplate NP1163L							
CAT NO	IDM4100T						
SPEC.	10F206X977G1						
FRAME	284T	HP	15 TE				
VOLTS	230/460						
MAG CUR	19.4/9.7	FLA	39.4/19.7				
RPM	1180	RPM MAX	4000				
HZ	60	PH	3	CLASS	H		
SER.F.	1.00	DES	A	SL HZ	0.8		
NEMA-NOM-EFF	92.4	WK2	6.86				
BLWR V		PH		HZ		A	
RATING	40C AMB-CONT						
DE BRG	6311	ODE BRG	6309				
CC		SN					

BALDOR
A MEMBER OF THE ABB GROUP

Parts List

Part Number	Description	Quantity
SA139084	SA 10F206X977G1	1.000 EA
RA128590	RA 10F206X977G1	1.000 EA
10CB3000SP	STD KO BOX MODEL 310,312,314 MTRS W/2.00	1.000 EA
12GS1000	GASKET	1.000 EA
10XN3118K12	5/16-18 X .75 GRADE 5, ZINC PLATED	4.000 EA
HW1001A31	LOCKWASHER 5/16, ZINC PLT.591 OD, .319 I	4.000 EA
WD1000B16	T&B CX70TN TERMINAL	1.000 EA
51XF2520A08	SCREW, HEX SER SLT HD, ZN 1/4-20 X .50 L	1.000 EA
10EP1104A57	FR. E.P. TEBC W/THRU SHAFT ENCODER DESIG	1.000 EA
HA4051A00	PLASTIC CAP FOR GREASE FITTING	1.000 EA
10XN3816K32	BOLT, 3/8-16X2 HH YZ(5)	4.000 EA
HW1001A38	LOCKWASHER 3/8, ZINC PLT .688 OD, .382 I	4.000 EA
HA1005A26	SLINGER, OD 3.00, ID 1.75, 309 BRG	1.000 EA
10XN2520K12	1/4-20 X.75 GRD 5	1.000 EA
HW1001A25	LOCKWASHER 1/4, ZINC PLT .493 OD, .255 I	1.000 EA
HW5100A11	W3917-042 WVY WSHR (WB)	1.000 EA
10XN2520K32	1/4-20 X 2.00 HX HD SCRW GRADE 5, ZINC P	2.000 EA
HW1001A25	LOCKWASHER 1/4, ZINC PLT .493 OD, .255 I	2.000 EA
10XN3118K40	5/16-18 X 2.50" HEX HD, GRADE 5	4.000 EA
HW1001A31	LOCKWASHER 5/16, ZINC PLT.591 OD, .319 I	4.000 EA
10EP1105A01	PU ENDPLATE, MACH 284-6T	1.000 EA
HA4051A00	PLASTIC CAP FOR GREASE FITTING	1.000 EA
10XN3816K28	3/8-16 X 1.75 HEX HD CAP SCREW, GRADE 5	4.000 EA
HW1001A38	LOCKWASHER 3/8, ZINC PLT .688 OD, .382 I	4.000 EA

BALDOR
A MEMBER OF THE ABB GROUP

Parts List (continued)

Part Number	Description	Quantity
HA1005A04SP	SLINGER, OD 3.620, ID 1.98,	1.000 EA
51XW2520A12	.25-20 X .75, TAPTITE II, HEX WSHR SLTD	6.000 EA
HW1001A25	LOCKWASHER 1/4, ZINC PLT .493 OD, .255 I	6.000 EA
10FH4006	310 VECTOR DR FAN HSG DUAL MTG (F1/F2	1.000 EA
HA6354A01	MTG. BRACKET 310 FRAME FAN HOUSING	4.000 EA
10XN3118K08	5/16-18 X .50 GRADE #5, STL, ZINC PLATE	4.000 EA
HW1001A31	LOCKWASHER 5/16, ZINC PLT.591 OD, .319 I	4.000 EA
WD4101A09	STIMPSON D3560, .875 DIA. HOLE PLUG	1.000 EA
10CB3500	CONDUIT BOX LID, CAST	1.000 EA
10GS1000	GASKET, CONDUIT BOX LID	1.000 EA
51XW2520A12	.25-20 X .75, TAPTITE II, HEX WSHR SLTD	4.000 EA
HW2501H28	KEY, 1/2 SQ X 3.250	1.000 EA
LB1115N	LABEL,LIFTING DEVICE (ON ROLLS)	1.000 EA
LB1009N	LABEL,ROTATION DIRECTION (ON ROLLS)	1.000 EA
HW4500A21	1618BALEMITE FITTING 825 UNIVERSAL	1.000 EA
HA4017A01	1/8 X 4 GREASE EXT (F/S)	1.000 EA
HW4500A17	317400 ALEMITE GREASE RELIEF	1.000 EA
HA4054	SHORT T-DRAIN FITTING, .125" N.P.T.	1.000 EA
MJ1000A75	GREASE, POLYREX EM EXXON (USe 4824-15A)	0.130 LB
HW4500A03	GREASE FITTING, .125 NPT 1610(ALEMITE) 8	1.000 EA
HW4500A17	317400 ALEMITE GREASE RELIEF	1.000 EA
HA4054	SHORT T-DRAIN FITTING, .125" N.P.T.	1.000 EA
EF5002SP	VENTURI/GRILLE KIT FOR 310/312 TEBC MOTO	1.000 EA
33CB3002	CONDUIT BOX, CAST	1.000 EA

BALDOR
A MEMBER OF THE ABB GROUP

Parts List (continued)

Part Number	Description	Quantity
34CB4500SP	CONDUIT BOX LID, STAMPED	1.000 EA
34GS1001	GASKET, STD CONDUIT BOX LID (LEXIDE)	1.000 EA
51XT0832A07	8-32 X .44 TYPE 23 HEX WASHER SLOTTED	4.000 EA
RM1022A02	GROMMET .875 ID 1.00 OD .12 WALL,VENDOR#	1.000 EA
51XN0832A12	8-32 HEX SLOT WSHR HD MACH SC GRADE 2, Z	2.000 EA
HW1001A08	WASHER, #8 SPLT LK, ZN	4.000 EA
XY0832A02	8-32 HEX NUT	2.000 EA
WD4101A08	STIMPSON #D3557,1.188 DIA. HOLE PLUG	2.000 EA
MG1000G27	MED CHARCOAL METALLIC GREY	0.070 GA
85XU0407A04	#4-7 X 1/4 DRIVE PIN	2.000 EA
MN416A01	TAG-INSTAL-MAINT no wire (1200/bx) 10/13	1.000 EA
LB1119N	WARNING LABEL	1.000 EA
LB1125C01	STD (STOCK) CARTON LABEL BALDOR WITH FLA	4.000 EA
LC0181	CONNECTION LABEL	1.000 EA
NP1163L	ALUM INV UL CSA CC	1.000 EA
10PA1010	PACKAGING GROUP,BRAKE MTRTDR 10086	1.000 EA
LB1506	LABEL "AMERICAN MADE" 1.50 X 1.00	1.000 EA

BALDOR
A MEMBER OF THE ABB GROUP

BALDOR A MEMBER OF THE ABB GROUP

BALDOR • RELIANCE Product Information Packet: IDM4100T - 15HP,1180RPM,3PH,60HZ,284T,1056M,TEBC,F1

BALDOR
A MEMBER OF THE ABB GROUP

AC Induction Motor Performance Data

Record # 36445

Typical performance - not guaranteed values

Winding: 10WGX977	**Type:** 1056M	**Enclosure:** TEBC

Nameplate Data				General Characteristics at 460 V, 60 Hz: High Volt Connection	
Rated Output (HP)	15			Full Load Torque	66.7 LB-FT
Volts	230/460			Start Configuration	DOL
Full Load Amps	39.4/19.7			Break Down Torque	194.6 LB-FT
R.P.M.	1180			Pull-Up Torque	101.1 LB-FT
Hz	60	Phase	3	Locked-rotor Torque	120.3 LB-FT
NEMA Design Code	A	KVA Code	H	Starting Current	130.1 Amps
Service Factor	1			No-load Current	9.66 Amps
NEMA Nom. Eff.	93	P.F.	77	Line-line Res. @ 25°C.	0.465 Ohms
Rating - Duty	40C AMB-CONT			Temp. Rise @ Rated Load	40°C
S.F. Amps				Temp. Rise @ S.F. Load	

Load Characteristics at 460 Volts, 60 Hz, 15 HP

% of Rated Load	25	50	75	100	125	150	S.F.
Power Factor	37	59	70	77	79	81	
Efficiency	87.2	91.9	93	93.1	92.7	91.9	
Speed	1194	1191	1188	1184	1180	1175	
Line Amperes	10.7	12.9	16.1	19.8	23.8	28.5	

Baldor Electric Company **Fort Smith, Arkansas** BALDOR • RELIANCE

3/1/2013

Catalog	IDM4100T	NP VOLTS	230/460	ENCLOSURE	TEBC	WYE CONN EQ CKT OHMS PER PHASE (BASE RATING, 20C)			
FRAME	284T	NP AMPS	39.4/19.7	Base Volts	460	R1	0.246	X1	1.169
HP	15 HP	DUTY	Cont	Base AMPS	19.8	R2	0.170	X2	1.427
BASE SPEED	1200	MAX SAFE RPM	4000	Slip Hz	0.80			XM	25.599
PHASE/HZ	3/60	AMB^{0}C/INSUL	40/H	WK^2 (lb-ft^2)	6.86				

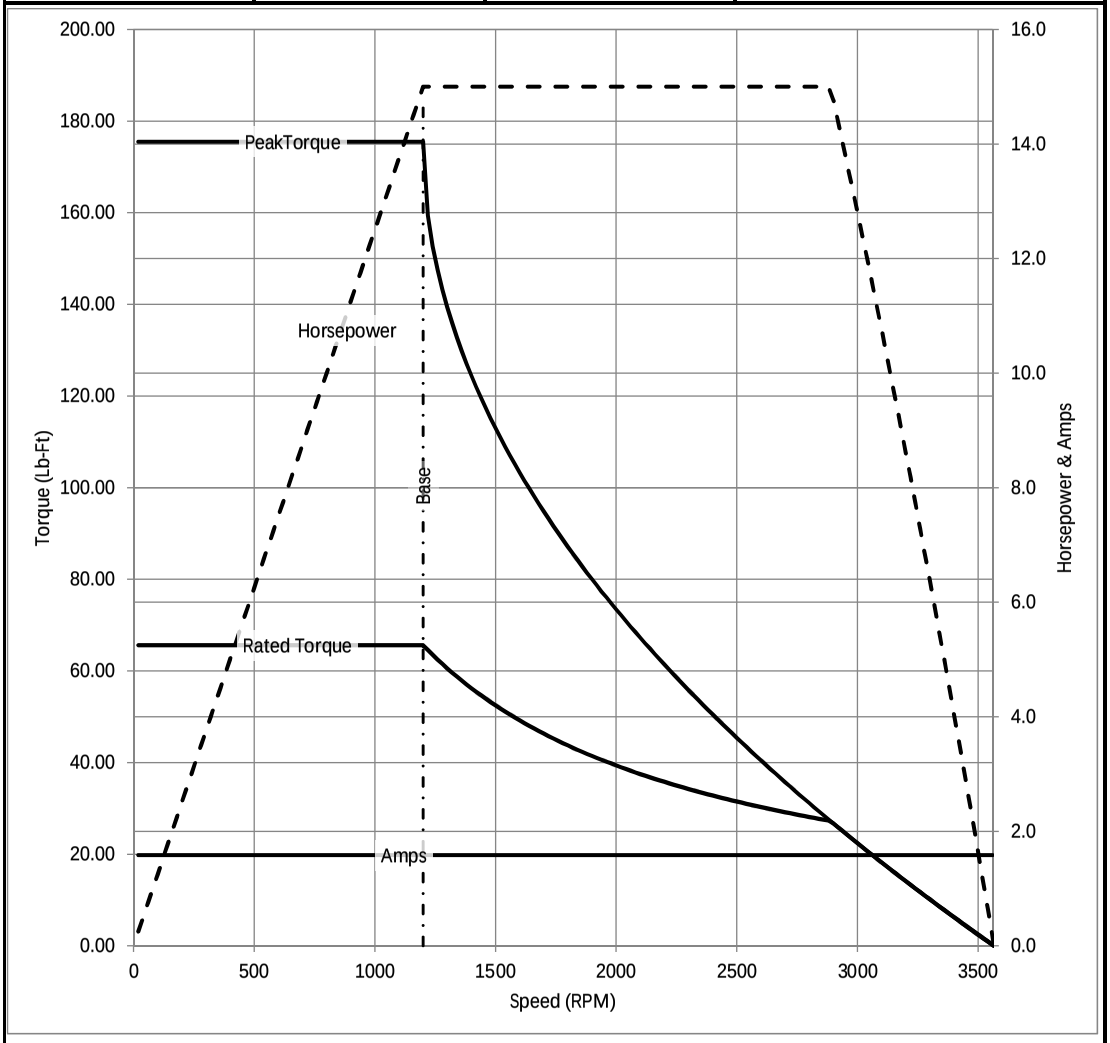

Remarks: Calculated Data

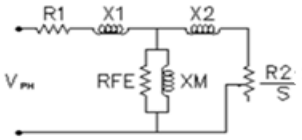

BALDOR A MEMBER OF THE ABB GROUP	DR BY ENR CK BY APP BY ENR DATE 3/1/2013	A-C MOTOR PERFORMANCE CURVES	10F206X977G1 ISSUE DATE 3/1/2013

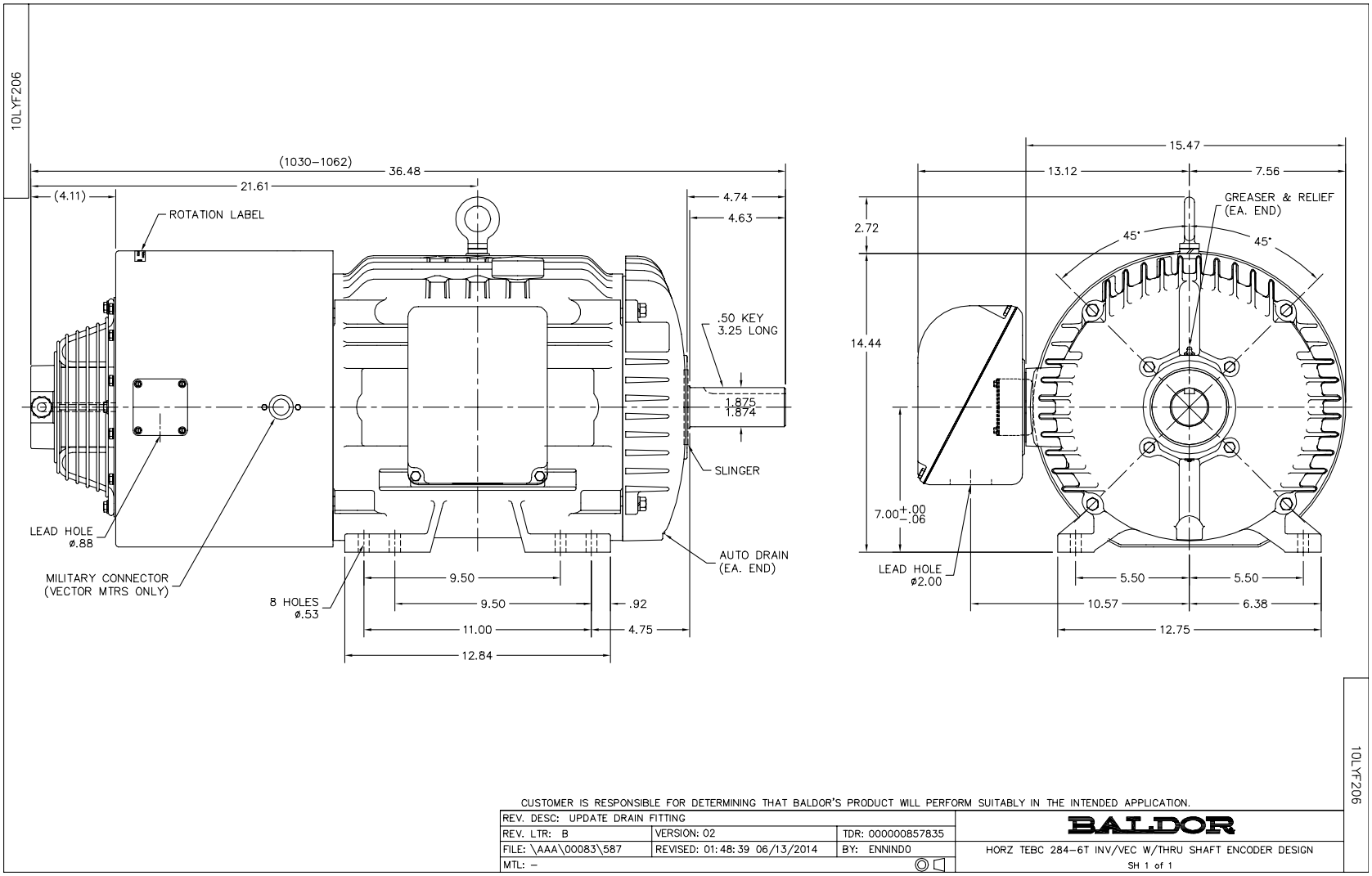

CUSTOMER IS RESPONSIBLE FOR DETERMINING THAT BALDOR'S PRODUCT WILL PERFORM SUITABLY IN THE INTENDED APPLICATION.

REV. DESC: UPDATE DRAIN FITTING			BALDOR
REV. LTR: B	VERSION: 02	TDR: 000000857835	
FILE: \AAA\00083\587	REVISED: 01:48:39 06/13/2014	BY: ENNINDO	HORZ TEBC 284–6T INV/VEC W/THRU SHAFT ENCODER DESIGN
MTL: –			SH 1 of 1

BALDOR
A MEMBER OF THE ABB GROUP

CD0180

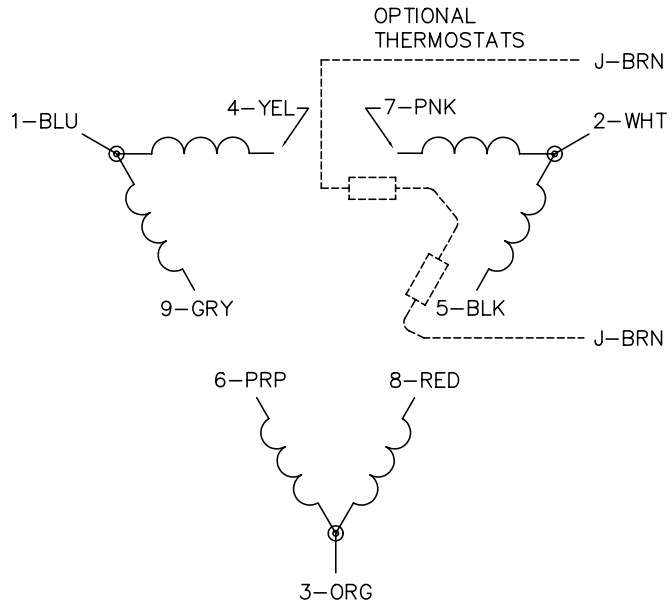

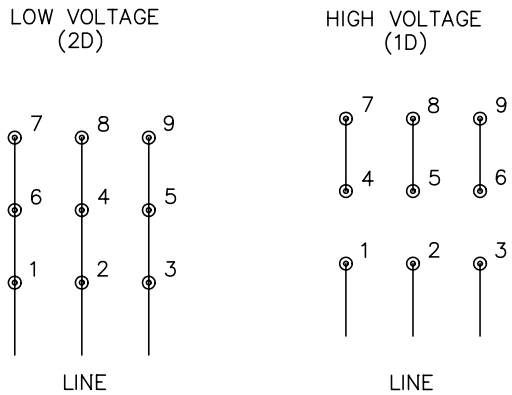

NOTES:

1. INTERCHANGE ANY TWO LINE LEADS TO REVERSE ROTATION.
2. OPTIONAL THERMOSTATS ARE PROVIDED WHEN SPECIFIED.
3. ACTUAL NUMBER OF INTERNAL PARALLEL CIRCUITS MAY BE A MULTIPLE OF THOSE SHOWN ABOVE.
4. LEAD COLORS ARE OPTIONAL. LEADS MUST ALWAYS BE NUMBERED AS SHOWN.

CD0180

REV. DESC: REVISE TO SHOW OPTIONAL COLORS			
REV. LTR: C	BY: JLP	REVISED: 01/21/99 2:28	TDR: 0171435
CD0180		FILE: AAA00005148	MDL: –
		MTL: –	

BALDOR ELECTRIC Co.

3PH, DV, 9 LEADS, DELTA CONNECTION

BALDOR
A MEMBER OF THE ABB GROUP