BALDOR
A MEMBER OF THE ABB GROUP

BALDOR • RELIANCE

Product Information Packet

IDNM3581T

1HP,1745RPM,3PH,60HZ,143TC,0524M,TENV,F1

Copyright © All product information within this document is subject to Baldor Electric Company copyright © protection, unless otherwise noted.

Part Detail

Revision:	F	**Status:**	PRD/A	**Change #:**		**Proprietary:**	No
Type:	AC	**Prod. Type:**	0524M	**Elec. Spec:**	05WGX129	**CD Diagram:**	CD0005
Enclosure:	TENV	**Mfg Plant:**		**Mech. Spec:**	05E534	**Layout:**	05LYE534
Frame:	143TC	**Mounting:**	F1	**Poles:**	04	**Created Date:**	08-17-2010
Base:	RG	**Rotation:**	R	**Insulation:**	H	**Eff. Date:**	08-13-2013
Leads:	9#18					**Replaced By:**	
Literature:		**Elec. Diagram:**					

BALDOR
A MEMBER OF THE ABB GROUP

Nameplate NP1163L							
CAT NO	IDNM3581T						
SPEC.	05E534X129G1						
FRAME	143TC	HP	1 TE				
VOLTS	230/460						
MAG CUR	1.8/.9	FLA	2.9/1.45				
RPM	1745	RPM MAX	6000				
HZ	60	PH	3	CLASS	H		
SER.F.	1.00	DES	B	SL HZ	1.7		
NEMA-NOM-EFF	85.5	WK2	0.142				
BLWR V		PH		HZ		A	
RATING	40C AMB-CONT						
DE BRG	6205	ODE BRG	6203				
CC		SN					

BALDOR A MEMBER OF THE ABB GROUP

Parts List

Part Number	Description	Quantity
SA201947	SA 05E534X129G1	1.000 EA
RA189239	RA 05E534X129G1	1.000 EA
06CB3000	BALDOR CONDUIT BOX CAST	1.000 EA
06GS1000	GASKET,CONDUIT BOX	1.000 EA
51XW2520A12	.25-20 X .75, TAPTITE II, HEX WSHR SLTD	2.000 EA
11XW1032G06	10-32 X .38, TAPTITE II, HEX WSHR SLTD U	1.000 EA
HW3001B01	003SS CUP WASHER, FOR #8 SCREW	1.000 EA
35EP1100B45	FRONT TENV 203 BRG W/GRSR & THRU-SHAFT E	1.000 EA
HW4500A01	1641B(ALEMITE)400 UNIV, GREASE FITT	1.000 EA
HW5100A03SP	WAVY WASHER (W1543-017)	1.000 EA
35EP1329A01	PU EP ENCL 143-5TC 205 BRG W/GRSR & STD	1.000 EA
HW4500A01	1641B(ALEMITE)400 UNIV, GREASE FITT	1.000 EA
51XN1032A20	10-32 X 1 1/4 HX WS SL SR	2.000 EA
HA3100A28	THRUBOLT 10-32 X 8.187	4.000 EA
35FH4801G	THRU-SHAFT ENCODER COVER INV/VECTOR F1 &	1.000 EA
WD4129	1.50 X 1.50 GRAY SNAP IN PLUG PROMOULD #	2.000 EA
10XN2520A08	1/4-20X1/2 HEX HEAD CAP	4.000 EA
10XN2520A08	1/4-20X1/2 HEX HEAD CAP	1.000 EA
06CB3500	BALDOR CONDUIT BOX LID	1.000 EA
06GS1001	BALDOR CONDUIT BOX GASKET	1.000 EA
51XW2520A12	.25-20 X .75, TAPTITE II, HEX WSHR SLTD	2.000 EA
HW2501D13SP	KEY, 3/16 SQ X 1.375	1.000 EA
HA7000A01	KEY RETAINER 7/8" DIA SHAFT	1.000 EA
MJ5004A05	#242-21 LOCTITE GENERAL PURPOSE MED. STR	0.005 EA

BALDOR
A MEMBER OF THE ABB GROUP

Parts List (continued)

Part Number	Description	Quantity
85XU0407S04	4X1/4 U DRIVE PIN STAINLESS	2.000 EA
MJ1000A75	GREASE, POLYREX EM EXXON (USe 4824-15A)	0.050 LB
MG1000G27	MED CHARCOAL METALLIC GREY	0.022 GA
LB1119N	WARNING LABEL	1.000 EA
LB1125C01	STD (STOCK) CARTON LABEL BALDOR WITH FLA	1.000 EA
LC0145B01	CONNECTION LABEL	1.000 EA
NP1163L	ALUM INV UL CSA CC	1.000 EA
36PA1000	PACK GROUP W/LB5001	1.000 EA
LB1506	LABEL "AMERICAN MADE" 1.50 X 1.00	1.000 EA
MN416A01	TAG-INSTAL-MAINT no wire (1200/bx) 10/13	1.000 EA

BALDOR
A MEMBER OF THE ABB GROUP

BALDOR
A MEMBER OF THE ABB GROUP

AC Induction Motor Performance Data
Record # 33945
Typical performance - not guaranteed values

Winding: 05WGX129	**Type:** 0524M	**Enclosure:** TENV

Nameplate Data				General Characteristics at 460 V, 60 Hz: High Volt Connection	
Rated Output (HP)	1			Full Load Torque	3.02 LB-FT
Volts	230/460			Start Configuration	DOL
Full Load Amps	2.9/1.45			Break Down Torque	14.3 LB-FT
R.P.M.	1745			Pull-Up Torque	8.76 LB-FT
Hz	60	Phase	3	Locked-rotor Torque	10.3 LB-FT
NEMA Design Code	B	KVA Code	M	Starting Current	13.5 Amps
Service Factor	1			No-load Current	0.89 Amps
NEMA Nom. Eff.	85.5	P.F.	76	Line-line Res. @ 25°C.	15.922 Ohms
Rating - Duty	40C AMB-CONT			Temp. Rise @ Rated Load	
S.F. Amps				Temp. Rise @ S.F. Load	

Load Characteristics at 460 Volts, 60 Hz, 1 HP

% of Rated Load	25	50	75	100	125	150	S.F.
Power Factor	33	53	67	76	81	85	
Efficiency	74.6	83.4	85.4	85.5	84.7	82.6	
Speed	1783.9	1773.9	1759.9	1743.9	1730.8	1698.3	
Line Amperes	0.935	1.05	1.22	1.45	1.7	1.99	

Baldor Electric Company **Fort Smith, Arkansas** BALDOR • RELIANCE

2/26/2013

Catalog	IDNM3581T	NP VOLTS	230/460	ENCLOSURE	TENV	WYE CONN EQ CKT OHMS PER PHASE (BASE RATING, 20C)			
FRAME	143TC	NP AMPS	2.9/1.45	Base Volts	460	R1	7.710	X1	10.232
HP	1 HP	DUTY	Cont	Base AMPS	1.45	R2	4.940	X2	7.257
BASE SPEED	1800	MAX SAFE RPM	6000	Slip Hz	1.87			XM	282.199
PHASE/HZ	3/60	AMB^{0}C/INSUL	40/H	WK^2 (lb-ft^2)	0.142				

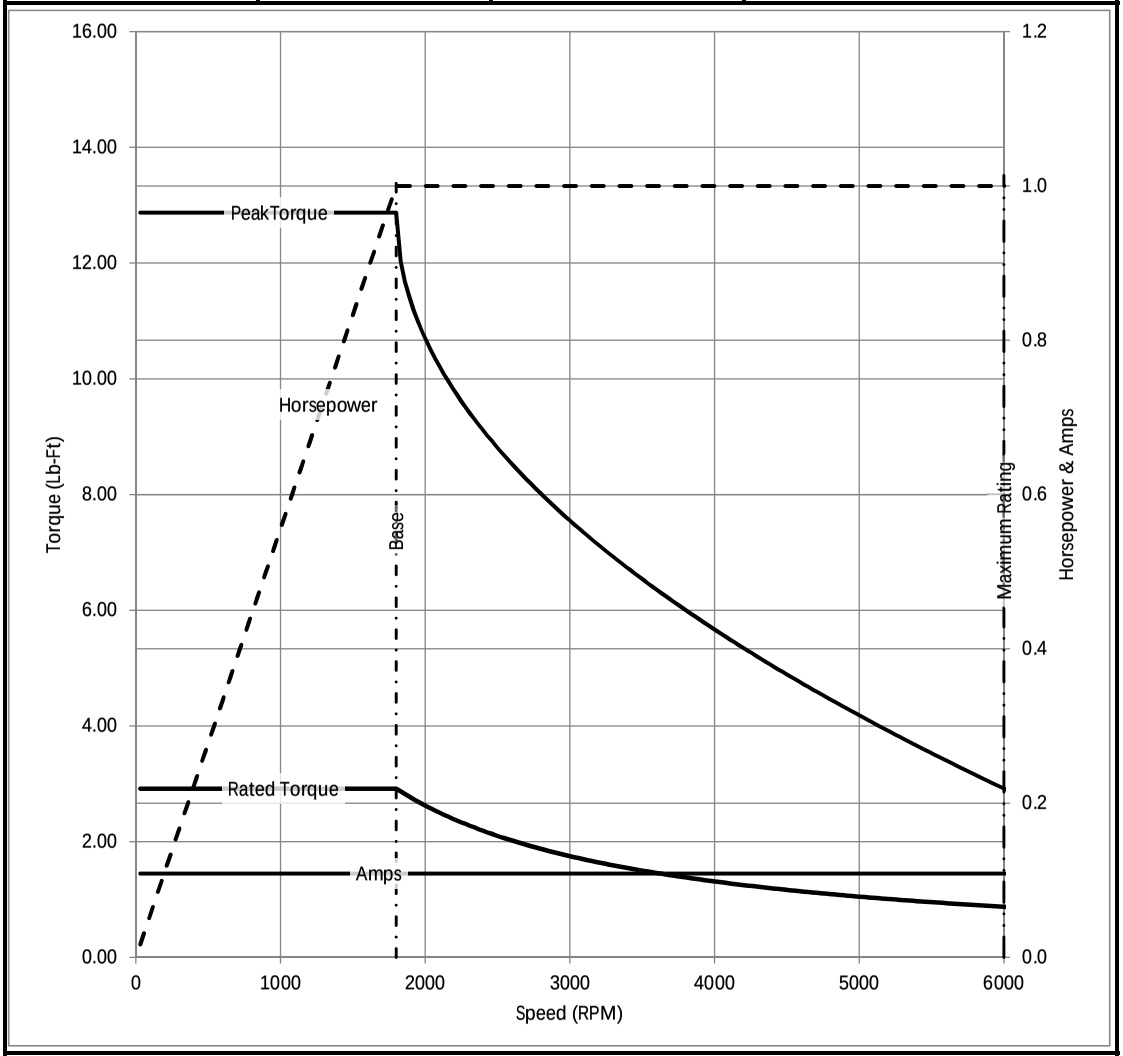

Remarks: Calculated Data

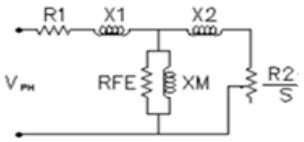

BALDOR A MEMBER OF THE ABB GROUP	DR BY ENR CK BY APP BY ENR DATE 2/26/2013	A-C MOTOR PERFORMANCE CURVES	05E534X129G1 ISSUE DATE 2/26/2013

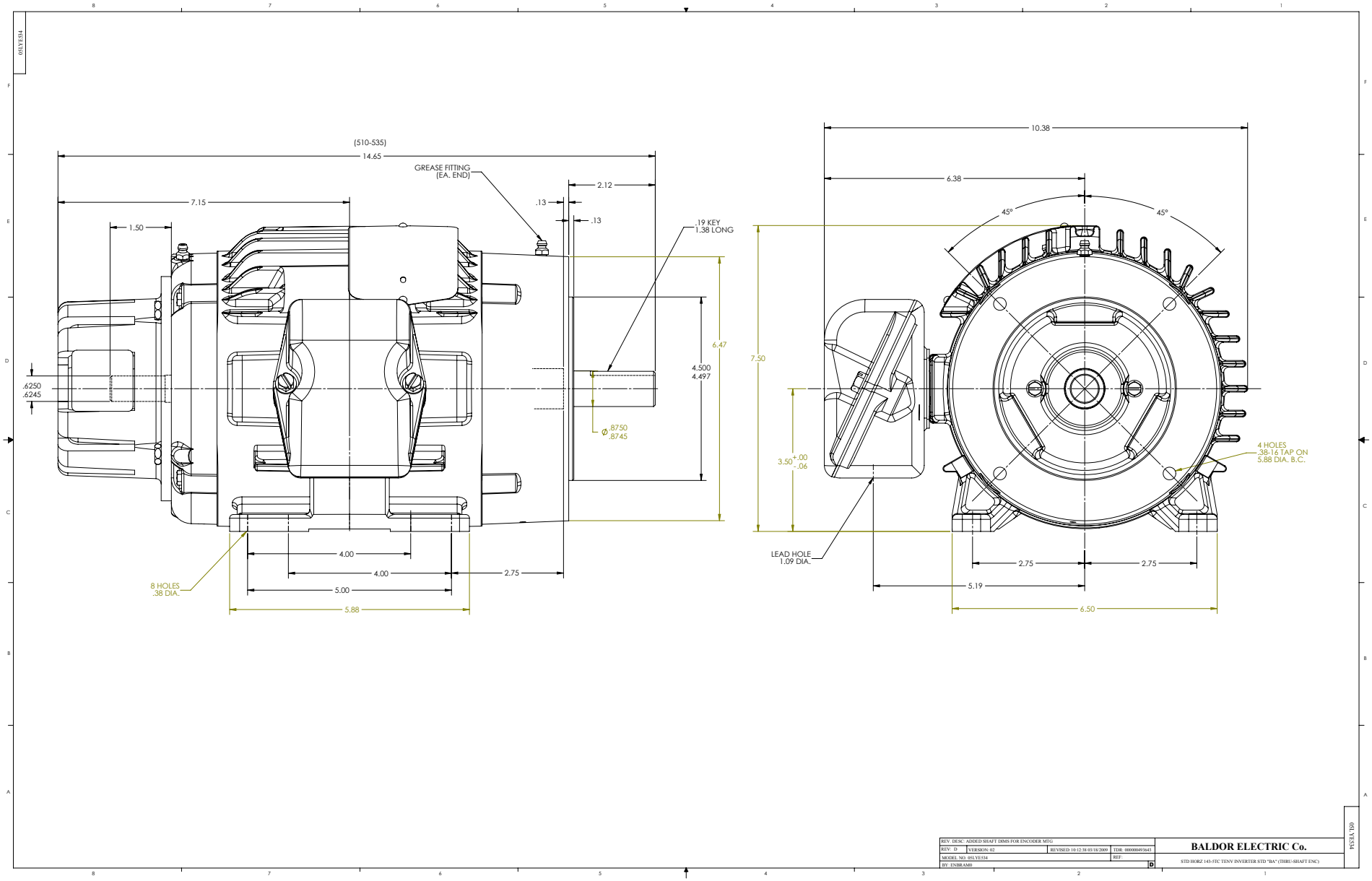

BALDOR
A MEMBER OF THE ABB GROUP

CD0005

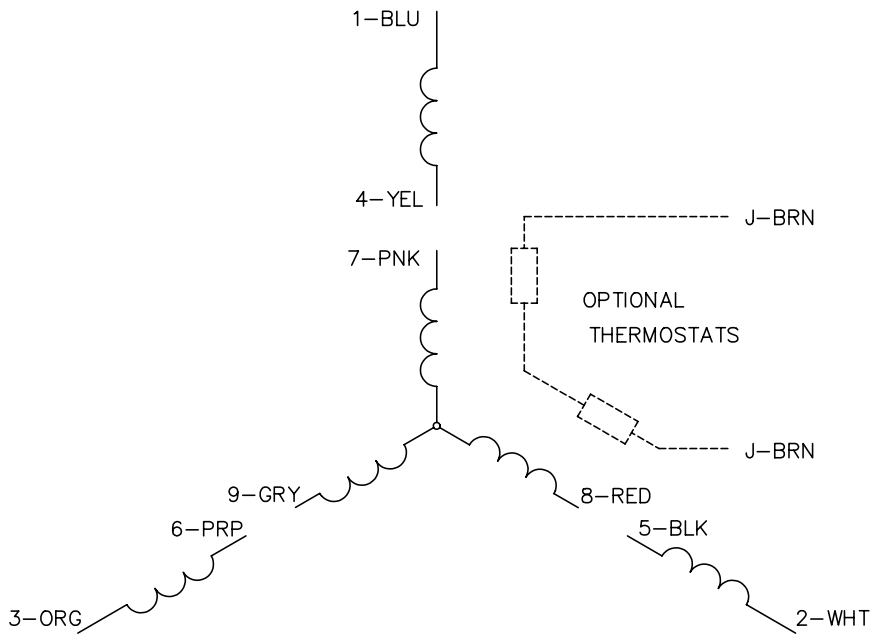

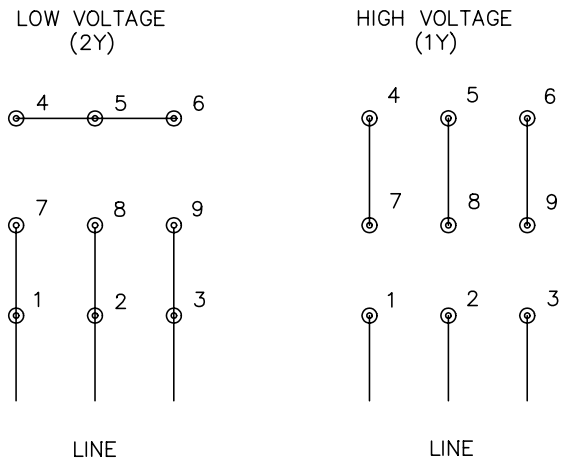

NOTES:

1. INTERCHANGE ANY TWO LINE LEADS TO REVERSE ROTATION.
2. OPTIONAL THERMOSTATS ARE PROVIDED WHEN SPECIFIED.
3. ACTUAL NUMBER OF INTERNAL PARALLEL CIRCUITS MAY BE A MULTIPLE OF THOSE SHOWN ABOVE.
4. LEAD COLORS ARE OPTIONAL. LEADS MUST ALWAYS BE NUMBERED AS SHOWN.

REV. DESC: REVISE TO SHOW OPTIONAL COLORS			
REV. LTR: E	BY: JLP	REVISED: 01/19/99 10:15	TDR: 0171435
CD0005		FILE: AAA00005140	MDL: –
		MTL: –	

BALDOR ELECTRIC Co.

3PH, DV, 9 LEADS

CD0005

BALDOR
A MEMBER OF THE ABB GROUP