BALDOR
A MEMBER OF THE ABB GROUP

BALDOR • RELIANCE

Product Information Packet

L3510A

1HP,1725RPM,1PH,60HZ,56/56H,3524L,TEFC,F

Copyright © All product information within this document is subject to Baldor Electric Company copyright © protection, unless otherwise noted.

Part Detail							
Revision:	AF	**Status:**	PRD/A	**Change #:**		**Proprietary:**	No
Type:	AC	**Prod. Type:**	3524L	**Elec. Spec:**	35WGY190	**CD Diagram:**	CD0008
Enclosure:	TEFC	**Mfg Plant:**		**Mech. Spec:**	35J383	**Layout:**	35LYJ383
Frame:	56H	**Mounting:**	F1	**Poles:**	04	**Created Date:**	
Base:	RG	**Rotation:**	R	**Insulation:**	B	**Eff. Date:**	09-18-2014
Leads:	3#16 A PH,3#18 B&J,1#14 #4TH					**Replaced By:**	
Literature:		**Elec. Diagram:**					

BALDOR
A MEMBER OF THE ABB GROUP

Nameplate NP1257L								
CAT.NO.	L3510A							
SPEC.	35J383Y190							
HP	1							
VOLTS	115/230							
AMP	13/6.5							
RPM	1725							
FRAME	56H	HZ	60	PH	1			
SER.F.	1.15	CODE	K	DES	L	CL	B	
NEMA-NOM-EFF	67	PF	73					
RATING	40C AMB-CONT							
CC		USABLE AT 208V	6.8					
DE	6205	ODE	6203					
ENCL	TEFC	SN						

BALDOR A MEMBER OF THE ABB GROUP

Parts List

Part Number	Description	Quantity
SA025941	SA 35J383Y190	1.000 EA
RA021991	RA 35J383Y190	1.000 EA
EC1645A06SP	ELEC CAP, 645-774 MFD, 125V, 2.06D X 4.	1.000 EA
TP5059	GENERIC THERMAL KIT	1.000 EA
NS2512A01	INSULATOR, CONDUIT BOX X	1.000 EA
35CB3007	35 CB CASTING W/.88 DIA. LEAD HOLE	1.000 EA
36GS1000SP	GASKET-CONDUIT BOX, .06 THICK #SV-330 LE	1.000 EA
51XB1016A07	10-16 X 7/16 HXWSSLD SERTYB	2.000 EA
11XW1032G06	10-32 X .38, TAPTITE II, HEX WSHR SLTD U	1.000 EA
51XW0832A07	8-32 X .44, TAPTITE II, HEX WSHR SLTD SE	2.000 EA
35EP3100M02	FREP TEFC 203 BRG W/O GRSR (RAISED FH MT	1.000 EA
NS2501A01	INSULATOR, CAPACITOR	1.000 EA
35CB4802A02SP	CAPACITOR COVER, STAMPED X W/AUTOPHORET	1.000 EA
35GS3001A02	GASKET, CA.COVER, 5.38 LONG .06 CS301	1.000 EA
51XB1016A05	10-16X5/16HX WA SL SR TYB (F/S)	2.000 EA
HW5100A03SP	WAVY WASHER (W1543-017)	1.000 EA
35EP3101A02SP	STD PU ENDPLATE-ENCL-205 BRG LESS GREASE	1.000 EA
XY1032A02	10-32 HEX NUT DIRECTIONAL SERRATION	4.000 EA
35FN3002A05SP	EXFN, PLASTIC, 6.376 OD, .638 ID	1.000 EA
51XB1214A16	12-14X1.00 HXWSSLD SERTYB	1.000 EA
35FH4005A32SP	IEC FH NO GRSR W/3 HOLES - W/AUTOPHERETI	1.000 EA
51XW1032A06	10-32 X .38, TAPTITE II, HEX WSHR SLTD S	3.000 EA
35CB4521GX	CONDUIT BOX LID KIT	1.000 EA
51XW0832A07	8-32 X .44, TAPTITE II, HEX WSHR SLTD SE	4.000 EA

Parts List (continued)

Part Number	Description	Quantity
HW2501D13SP	KEY, 3/16 SQ X 1.375	1.000 EA
HA7000A04	KEY RETAINER 0.625 DIA SHAFTS	1.000 EA
85XU0407S04	4X1/4 U DRIVE PIN STAINLESS	2.000 EA
WD1000A15	3-520132-2 AMP FLAG (4M/RL NON-CANC/NON-	2.000 EA
MJ1000A75	GREASE, POLYREX EM EXXON (USe 4824-15A)	0.050 LB
MG1000G27	MED CHARCOAL METALLIC GREY	0.017 GA
HA3100A18	THRUBOLT 10-32 X 9.250	4.000 EA
SP5055A67	MODEL 35 TYPE L STATIONARY SWITCH	1.000 EA
LB1118	LABEL,WARNING (ROLL LABEL)	1.000 EA
LB1125C01	STD (STOCK) CARTON LABEL BALDOR WITH FLA	1.000 EA
LC0008	CONNECTION LABEL	1.000 EA
NP1257L	ALUM UL CSA CC THERMAL REV MTG	1.000 EA
35PA1066	PACKING GROUP COMBINED PRINT	1.000 EA
LB1506	LABEL "AMERICAN MADE" 1.50 X 1.00	1.000 EA
MN416A01	TAG-INSTAL-MAINT no wire (1200/bx) 10/13	1.000 EA

BALDOR
A MEMBER OF THE ABB GROUP

Accessories

Part Number	Description	Multiplier
35-8762	C FACE KIT	A8
35EP1506A01SP	D-FLANGE KIT	A8

BALDOR
A MEMBER OF THE ABB GROUP

AC Induction Motor Performance Data

Record # 10161 - Typical performance - not guaranteed values

Winding: 35WGY190-R001	**Type:** 3524L	**Enclosure:** TEFC

Nameplate Data				230 V, 60 Hz: High Voltage Connection	
Rated Output (HP)	1			Full Load Torque	3 LB-FT
Volts	115/230			Start Configuration	direct on line
Full Load Amps	13/6.5			Breakdown Torque	6.6 LB-FT
R.P.M.	1725			Pull-up Torque	5.3 LB-FT
Hz	60	Phase	1	Locked-rotor Torque	9.3 LB-FT
NEMA Design Code	L	KVA Code	K	Starting Current	37 A
Service Factor (S.F.)	1.15			No-load Current	4.6 A
NEMA Nom. Eff.	67	Power Factor	73	Line-line Res. @ 25ºC	2.76 Ω A Ph 1.86 Ω B Ph
Rating - Duty	40C AMB-CONT			Temp. Rise @ Rated Load	76°C
S.F. Amps				Temp. Rise @ S.F. Load	92°C

Load Characteristics 230 V, 60 Hz, 1 HP

% of Rated Load	25	50	75	100	125	150	S.F.
Power Factor	37	53	65	73	78	82	76
Efficiency	51.1	63	66.8	66.6	63.9	58.9	65
Speed	1781	1766	1749	1725	1697	1658	1708
Line amperes	4.7	5.1	5.7	6.7	8	9.7	7.5

BALDOR A MEMBER OF THE ABB GROUP

Performance Graph at 230V, 60Hz, 1.0HP Typical performance - Not guaranteed values

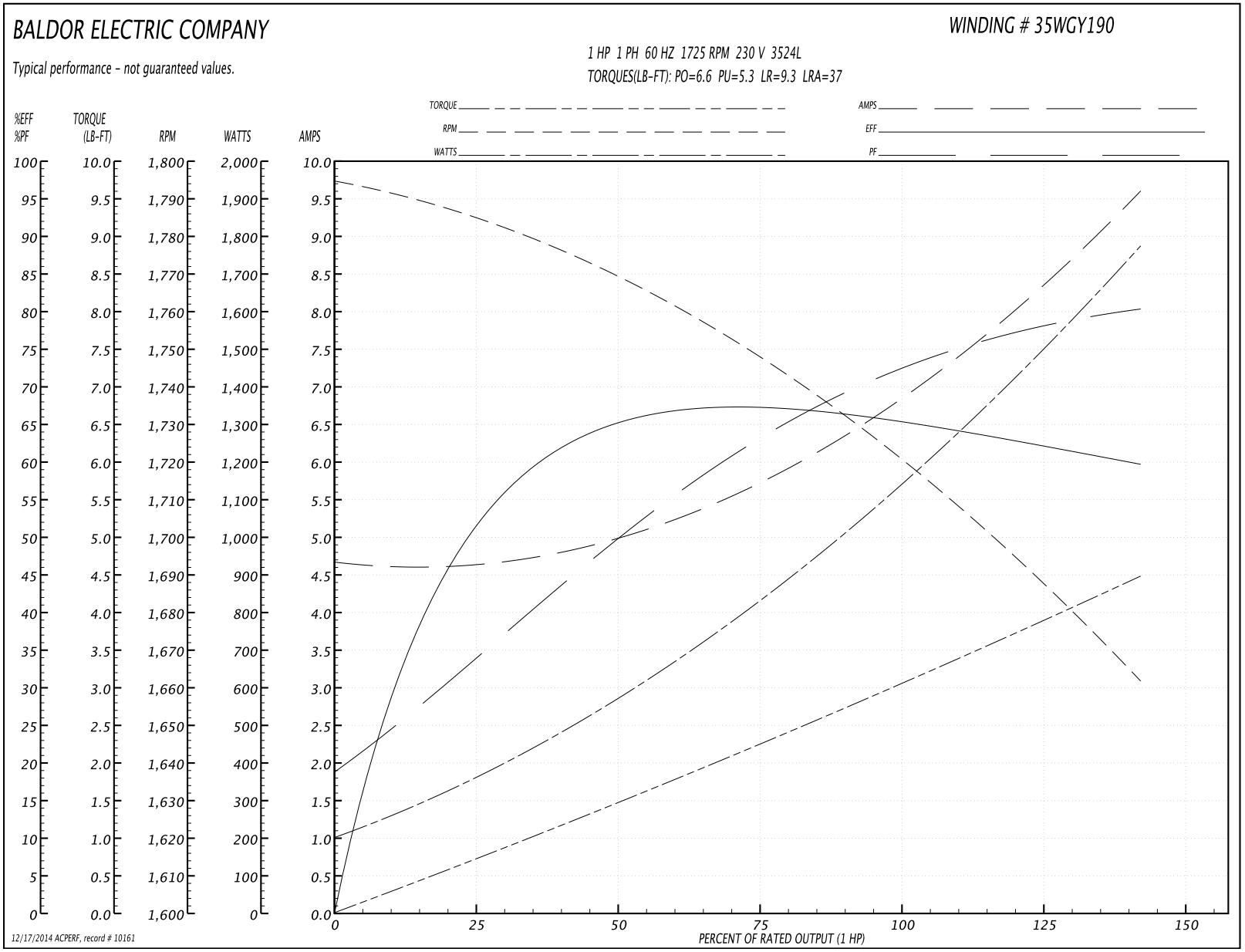

BALDOR
A MEMBER OF THE ABB GROUP

35LYJ383

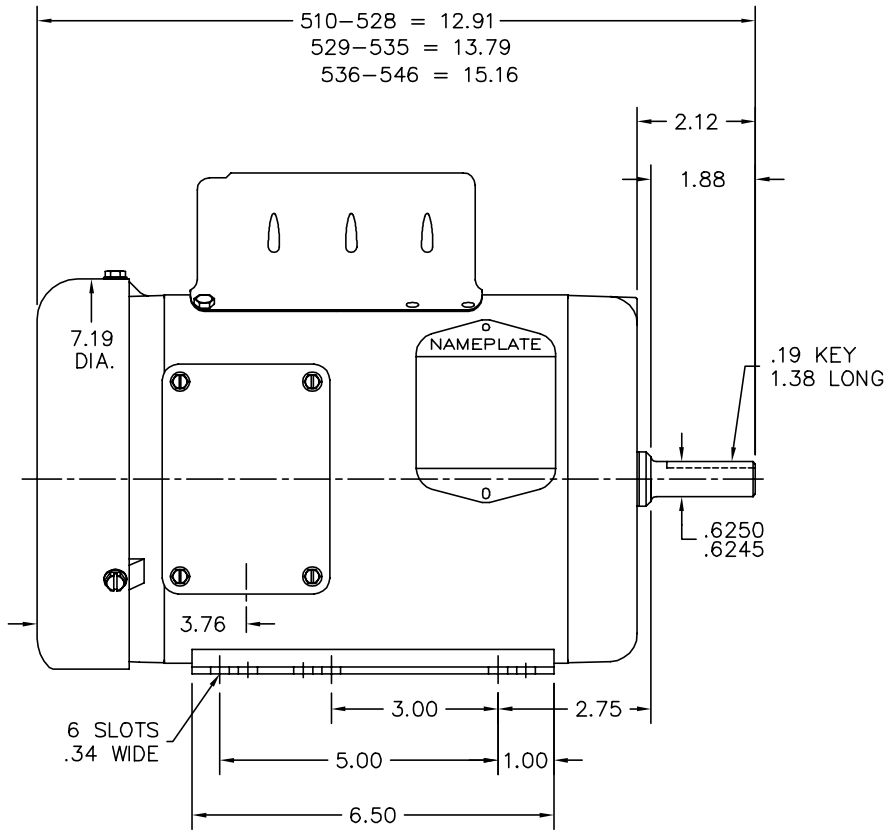

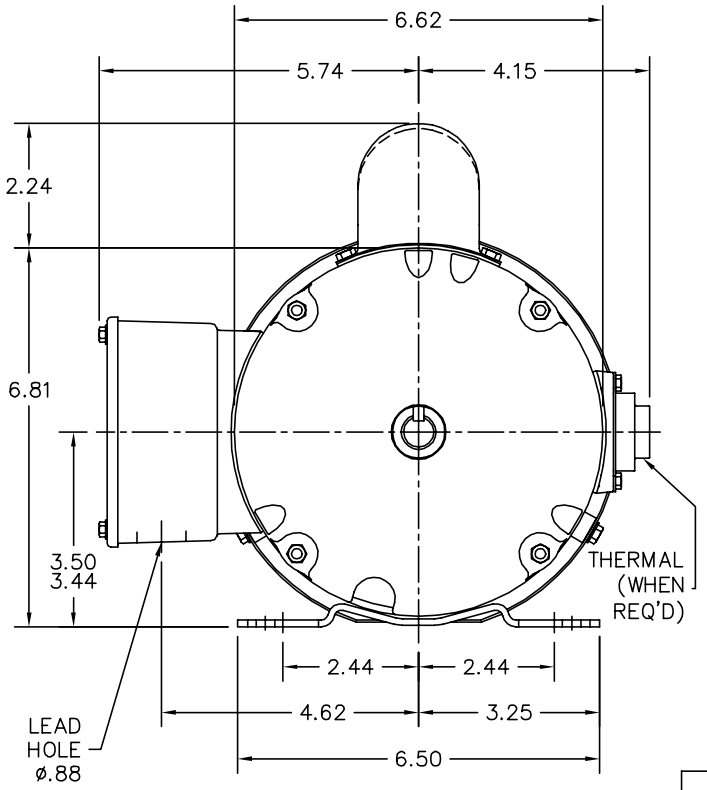

35LYJ383

CUSTOMER IS RESPONSIBLE FOR DETERMINING THAT BALDOR'S PRODUCT WILL PERFORM SUITABLY IN THE INTENDED APPLICATION.

REV. DESC: REV TO PUT IN CORRECT PTS			BALDOR
REV. LTR: F	VERSION: 01	TDR: 000000581517	
FILE: \AAA\00010\408		REVISED: 01:04:35 02/17/2011	STD HORZ 35L NEMA 56/56H TEFC
MTL: –		BY: ENBENBO	SH 1 of 1

BALDOR
A MEMBER OF THE ABB GROUP

CD0008

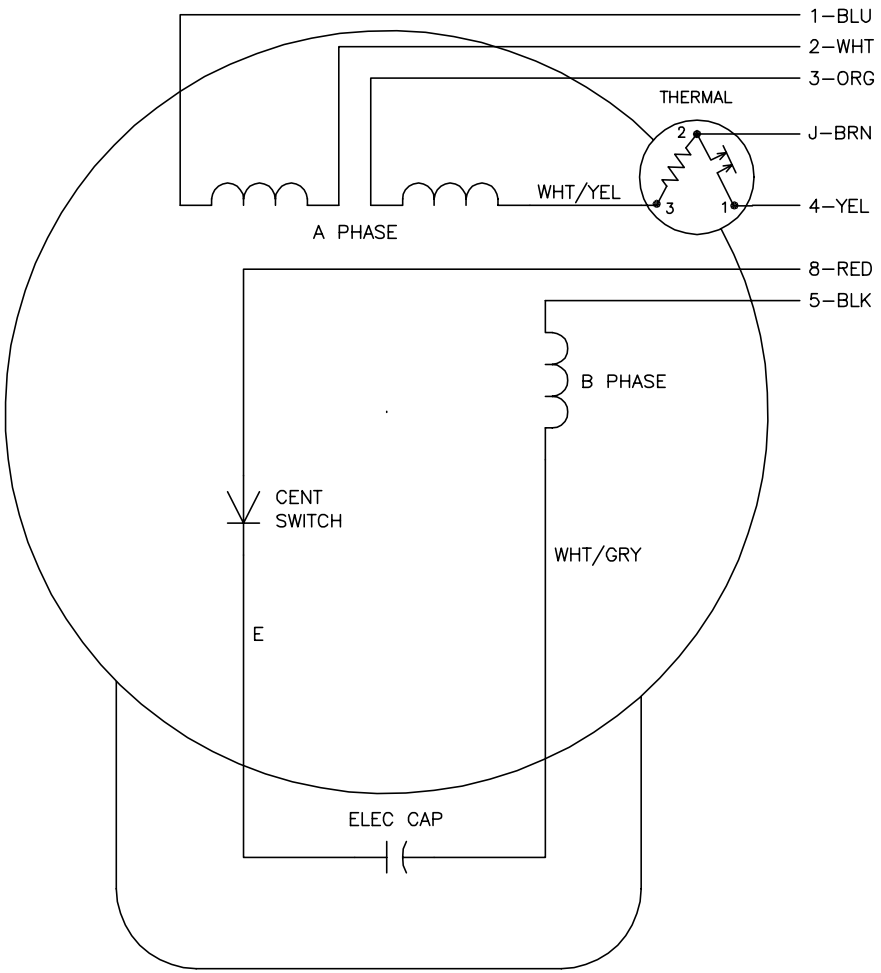

	LINE A	LINE B	JOIN	JOIN
HIGH STD	1	4	2,3,8	J,5
HIGH OPP	1	4	2,3,5	J,8
LOW STD	1,3,8	4	–	2,J,5
LOW OPP	1,3,5	4	–	2,J,8

NOTES:

1. STANDARD ROTATION IS CCW FACING END OPPOSITE SHAFT EXTENSION.
2. MULTIPLE CAPACITORS ARE CONNECTED IN PARALLEL UNLESS OTHERWISE SPECIFIED.
3. LEAD COLORS ARE OPTIONAL. LEADS MUST ALWAYS BE NUMBERED AS SHOWN.

REV. DESC: REMOVE 2–TERMINAL THERMAL DETAIL, SEE CD0008A02			BALDOR ELECTRIC Co.
REV. LTR: F	VERSION: 01	TDR: 000000360649	
CD0008	FILE: \AAA\00007\408	REVISED: 10:56:54 04/18/2005	TYPE L, DV, REV, THERMAL, 7 LEADS
	MTL: –	BY: ENJOEPO	

CD0008

BALDOR A MEMBER OF THE ABB GROUP