START

T1 (U1) — L1
T2 (V1) — L2
T3 (W1) — L3
T4 (U2)
T5 (V2)
T6 (W2)

RUN

T1 (U1), T6 (W2) — L1
T2 (V1), T4 (U2) — L2
T3 (W1), T5 (V2) — L3

NOTE:
IEC LEAD MARKINGS ARE NOTED IN PARENTHESES

THREE PHASE – Y START
△ RUN MOTOR

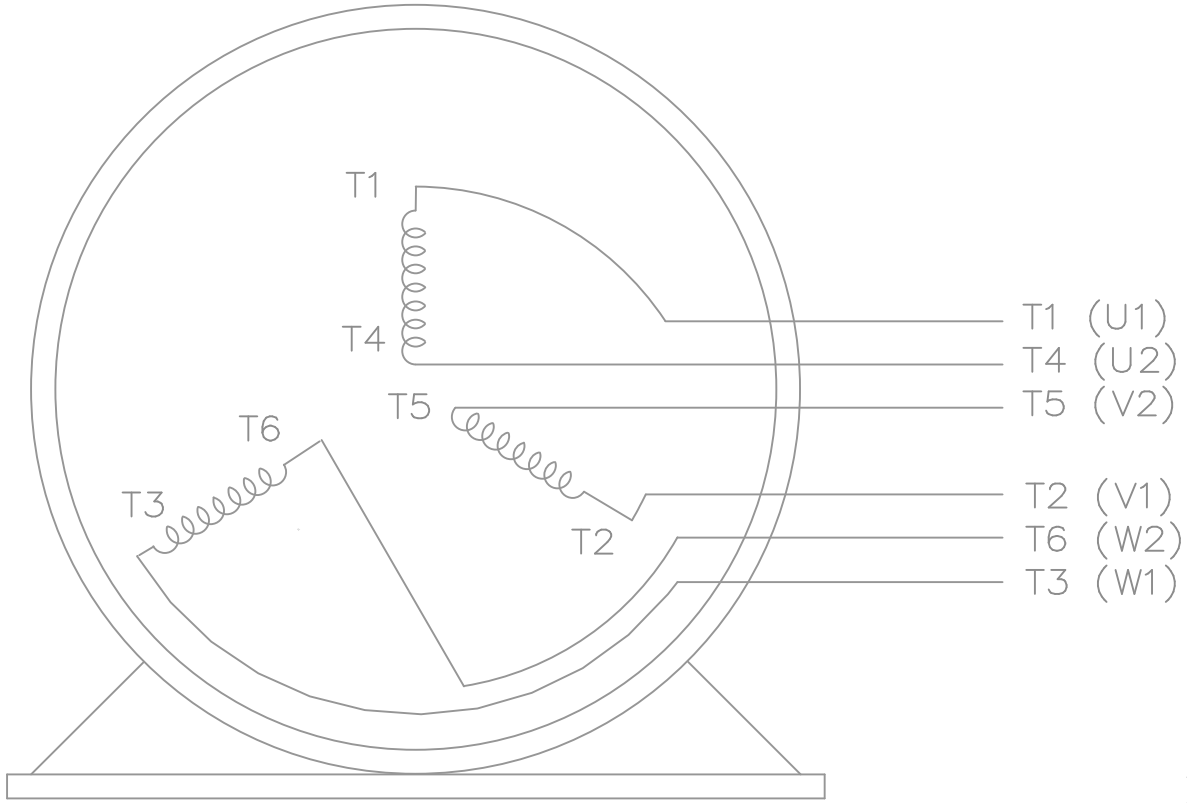


VIEW OF TERMINAL END

T6CK
T6BM
T4CC
T2DL
T4C

| NO. | REVISION | BY & DATE | CHK |
|---|---|---|---|
| 3 | REVISED TO MATCH M.E. ORIGINAL | TAT 07-25-2005 | ML |
| 2 | REVISED DRAWING MISTAKE CN 29200-2980 | ERH 05-15-2003 | ML |
| 1 | NEW DRAWING | BLR 10-09-1999 | |

TOLERANCES UNLESS SPECIFIED

| DEC. | INCHES |
|---|---|
| .X | ±.1 |
| .XX | ±.02 |
| .XXX | ±.005 |
| .XXXX | ±.0005 |
| ANG | ±7'30" |

Lincoln MOTORS

TITLE CONNECTION DIAGRAM
3ø – WYE START DELTA RUN

MAT'L.
FINISH
CAD FILE ee7340_ln
RFP
DIST WA-LB-SB

DRAWN BLR 10-04-1999
CHK DRS 10-04-1999
APPD TB 10-04-1999
SCALE 1=1
REF
FMF
PREV

SIZE A
DRAWING NO. EE7340-LN
PAGE OF
REV. 3

THIS DRAWING IN DESIGN AND DETAIL IS OUR PROPERTY AND MUST NOT BE USED EXCEPT IN CONNECTION WITH OUR WORK ALL RIGHTS OF DESIGN AND INVENTION ARE RESERVED
THIS IS AN ELECTRONICALLY GENERATED DOCUMENT – DO NOT SCALE THIS PRINT

9/30/2008 5:41:56 AM