SS518366LN

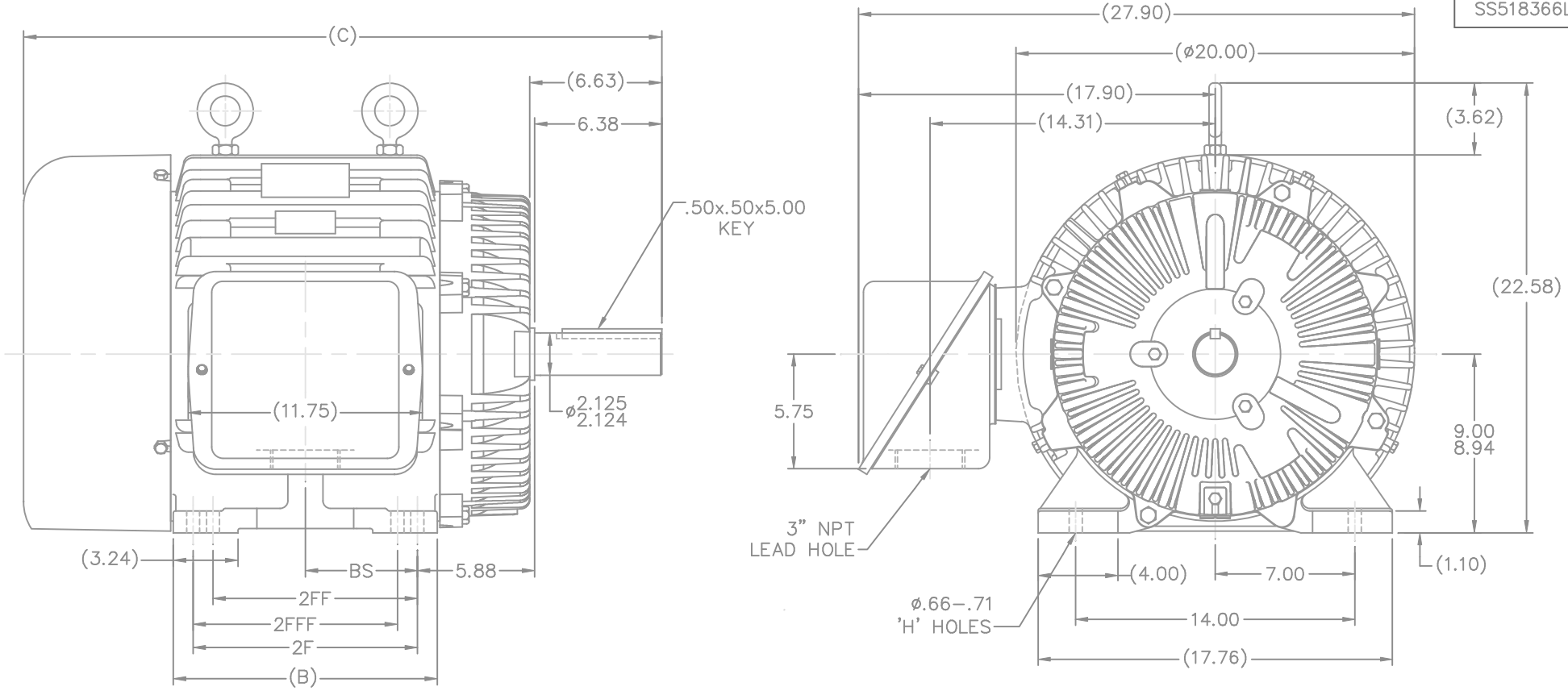

F2 MTG.

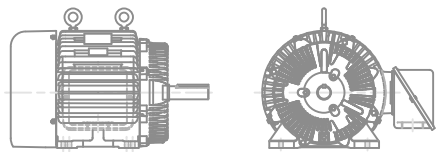

NOTES:
1. CONDUIT BOX CAN BE ROTATED IN 90° STEPS.
2. CONDUIT BOX CAN BE MOUNTED ON OPPOSITE SIDE BY REMOVING BRACKETS AND TURNING FRAME 180°.
3. NAMEPLATE TO BE READ FROM CONDUIT BOX SIDE OF MOTOR

DASH	FRAME	C	H	B	2F	2FF	2FFF	BS
1350	364U	32.00	4	13.25	11.25			5.62
1450	365U	33.00	8	14.25	12.25	11.25	11.25	6.12

NO.	REVISION		BY & DATE	CHK
3	REVISED EYEBOLTS	CN 35028	MSG 10-07-2002	
2	(4) FOOT HOLES ADDED AUTO DUTY	CN 35028	BJK 07-19-2002	
1	NEW DRAWING	MU37686	KL 06-04-2001	

TOLERANCES UNLESS SPECIFIED: DEC. INCHES; .X ±.1; .XX ±.03; .XXX ±.005; .XXXX ±.0005; ANG ±7'30"

Lincoln MOTORS

TITLE OUTLINE
360U FR. – TEFC – TAPPED LEAD HOLE

MAT'L.

FINISH

DRAWN	KL 06-04-2001
CHK	DJK 06-04-2001
APPD	JES 06-04-2001
SCALE	1=5
REF	B-SS504722
FMF	
PREV	

THIS DRAWING IN DESIGN AND DETAIL IS OUR PROPERTY AND MUST NOT BE USED EXCEPT IN CONNECTION WITH OUR WORK ALL RIGHTS OF DESIGN AND INVENTION ARE RESERVED
THIS IS AN ELECTRONICALLY GENERATED DOCUMENT – DO NOT SCALE THIS PRINT

RFP

DIST WA

CAD FILE SS518366LN

SIZE	DRAWING NO.	PAGE OF	REV.
B	SS518366LN		3

10/2/2008 7:02:49 AM