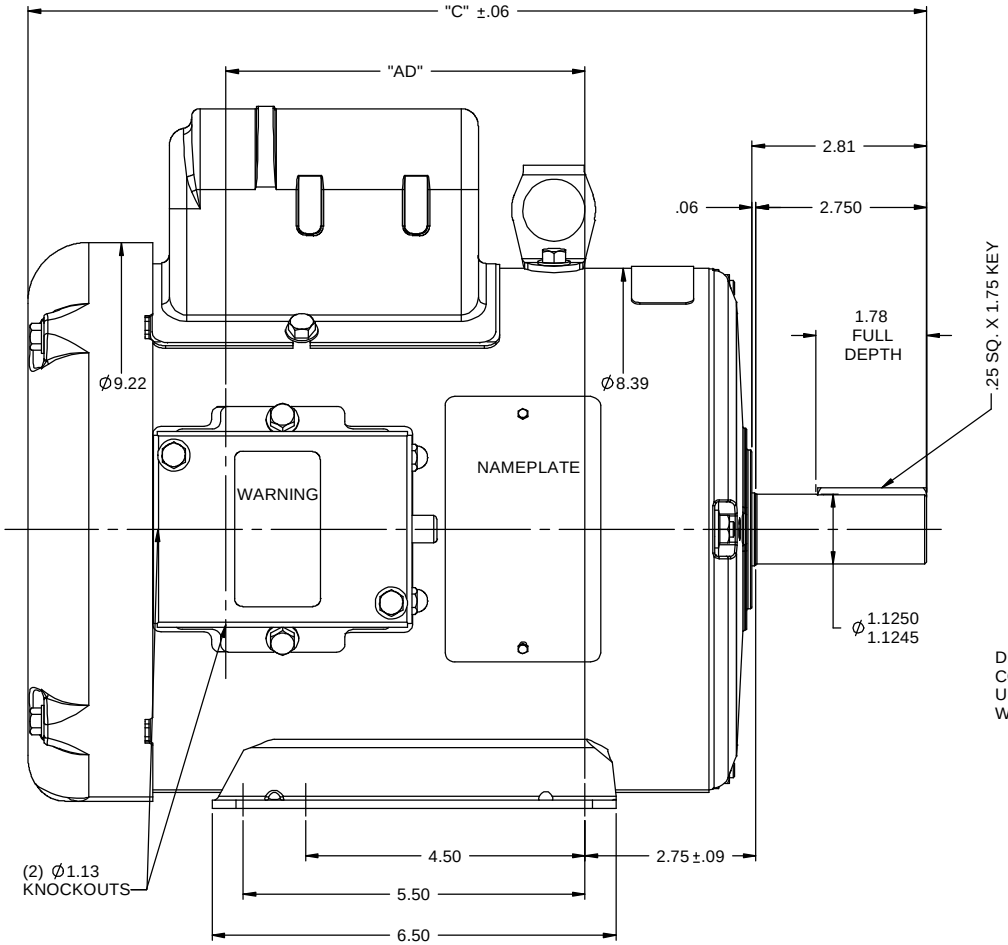

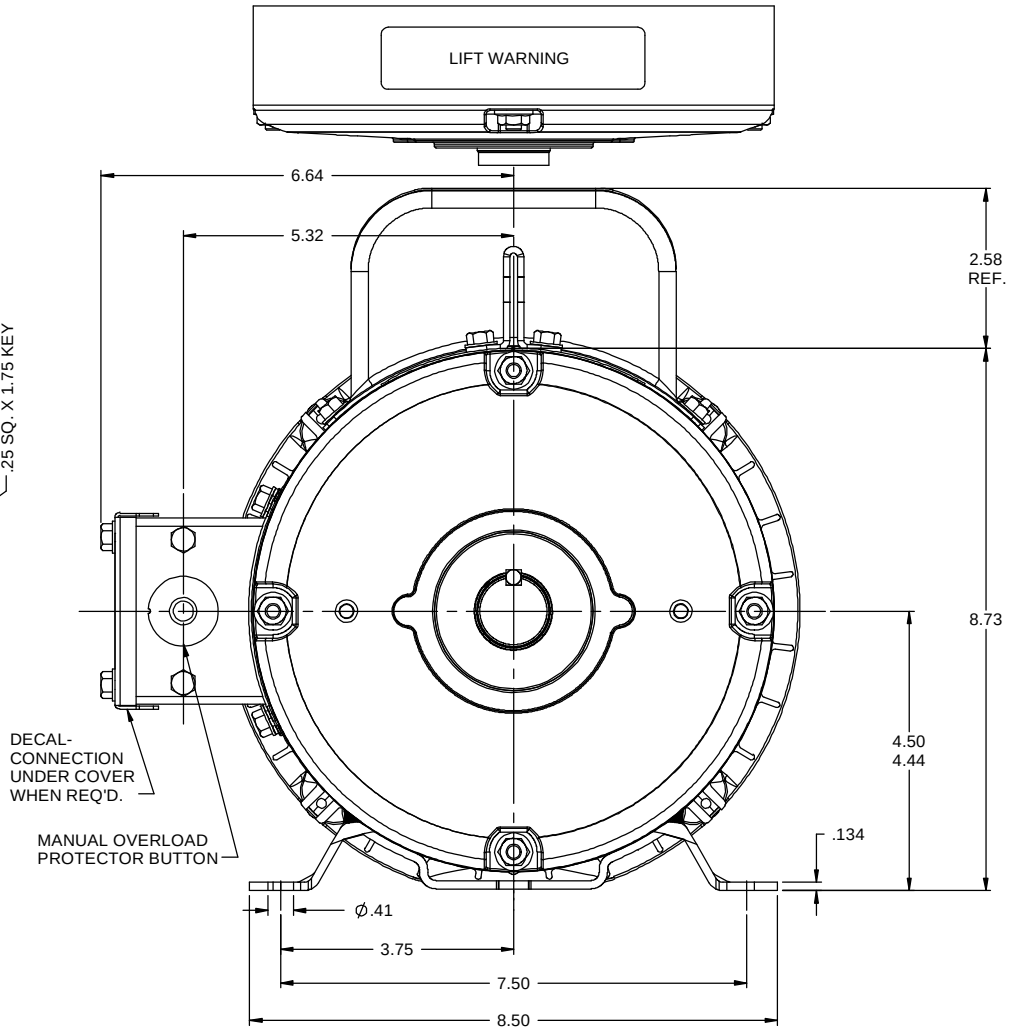

GASKETS THROUGHOUT

DASH NO.	"C"	"AD"
850	13.96	5.25
900	14.46	5.75
950	14.96	6.25
1000	15.46	6.75
1050	15.96	7.25
1100	16.46	7.75
1150	16.96	8.25

NO	REVISION	BY & DATE	CHK

TOLERANCES UNLESS SPECIFIED

DEC	INCHES
.X	±.1
.XX	±.03
.XXX	±.005
.XXXX	±.0005
ANG	±1/2°

Lincoln MOTORS

TITLE OUTLINE - 180T FRAME
TEFC - RIGID MOUNT
MAT'L GENERAL PURPOSE
FINISH

DRAWN JD 05/08/2012
CHK
APPR
SCALE 1:2
REF 035482
FMF LM24802
PAGE OF

THIRD ANGLE PROJECTION

RFP
PREV
NETWORK FILE NAME 035482LN

SIZE B
DRAWING NO 035482LN
REV

5/8/2012 4:53:25 AM - Converted by Connexus